ThinkSystem ST50 V2
Setup Guide

Machine Types: 7D8J and 7D8K

Note

Before using this information and the product it supports, be sure to read and understand the safety information and the safety instructions, which are available at:
https://pubs.lenovo.com/safety_documentation/

In addition, be sure that you are familiar with the terms and conditions of the Lenovo warranty for your server, which can be found at:
http://datacentersupport.lenovo.com/warrantylookup

Sixth (April 2025)

© Copyright Lenovo 2022, 2025.

LIMITED AND RESTRICTED RIGHTS NOTICE: If data or software is delivered pursuant to a General Services Administration (GSA) contract, use, reproduction, or disclosure is subject to restrictions set forth in Contract No. GS-35F-05925.

Contents

Chapter 1. Introduction 1
Server package contents 2
Server form factor 2
Features. 2
Specifications 3
Particulate contamination 8

Chapter 2. Server components 11
Front view 11
Front panel 11
Side view 13
Rear view 14
Server locks 17
System board components 18
RAID adapters 19
Internal cable routing. 19
Cable routing for drive bay 1 and bay 2 21
Cable routing for drive bay 3 23
Cable routing for optical disk drive. 24
Cable routing for the RAID adapter and drives 25
Cable routing for the power supply unit 29
Cable routing for the front fan and rear fan . . 30
Cable routing for the heat sink and fan module 31
Cable routing for the intrusion switch. 33
Cable routing for the thermal sensor 34
Cable routing for the mono amplifier 35
Cable routing for the power button with LED. 36
Parts list. 37
Power cords 40

Chapter 3. Server hardware setup . . 41
Server setup checklist 41
Installation Guidelines 41
Safety inspection checklist. 43
System reliability guidelines 43
Handling static-sensitive devices 44
Memory module installation rules 45
Drive bay locations 46
Install server hardware options 47
Remove the server from the rails 47
Remove the server cover 49
Remove the front bezel 51
Remove the CMOS battery (CR2032) 53
Install a simple-swap drive and drive cage (bay 1-2) 55
Install a simple-swap drive and the drive cage (bay 3) 65
Install an optical drive and the drive cage . . . 71
Install the intrusion switch 78
Install the fan (front and rear) 80
Install a memory module 82
Install an M.2 drive 84
Install the M.2 drive retainer 85
Install a PCIe adapter 86
Install the CMOS battery (CR2032) 89
Install the front bezel 91
Install the server cover 92
Install the server to the rails 95
Cable the server 98
Power on the server 99
Validate server setup 99
Power off the server 99

Chapter 4. System configuration . . .101
Update the firmware 101
Configure the firmware 101
Starting the Setup Utility program 101
Changing the display language of the Setup Utility program 101
Enabling or disabling a device 101
Enabling or disabling the automatic power-on 102
Acoustic/Thermal optimal performance. . . . 102
Configuration change detection. 103
Using passwords 103
Selecting a startup device 105
Exiting the Setup Utility program 105
Memory configuration 105
RAID configuration 106
Deploy the operating system. 106
Back up the server configuration 107
Update VPD (Vital Product Data) 107

Chapter 5. Resolving installation issues 109

Appendix A. Getting help and technical assistance 113
Before you call 113
Contacting Support 114

Appendix B. Trademarks 115

© Copyright Lenovo 2022, 2025

Chapter 1. Introduction

The ThinkSystem ST50 V2 server is a 4U tower server designed for performance and expansion for various IT workloads. With the modular design, the server is flexible to be customized for maximum storage capacity or high storage density with selectable input/output options and tiered system management.

Performance, ease of use, reliability, and expansion capabilities were key considerations in the design of the server. These design features make it possible for you to customize the system hardware to meet your needs today and provide flexible expansion capabilities for the future.

The server comes with a limited warranty. For details about the warranty, see:https://support.lenovo.com/us/en/solutions/ht503310

For details about your specific warranty, see:http://datacentersupport.lenovo.com/warrantylookup

Identifying your server

When you contact Lenovo for help, the machine type and serial number information helps support technicians to identify your server and provide faster service.

The machine type and serial number are on the ID label on the front of the server.

The following illustration shows the location of the ID label.

Note: The illustrations in this document might differ slightly from your server.

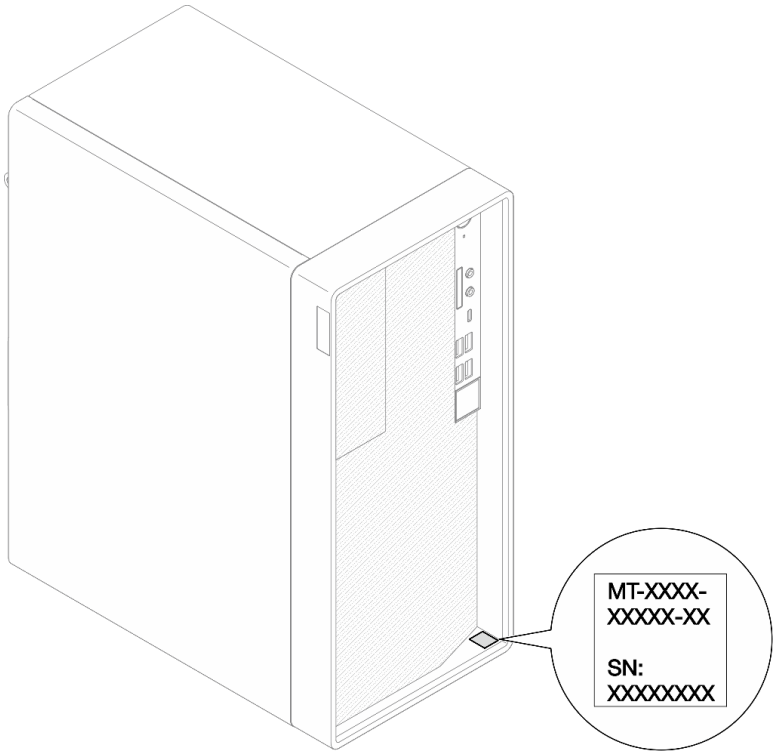

Figure 1. Location of the ID label

© Copyright Lenovo 2022, 2025

Quick response code

The system service label, which is on the inside of the server cover, provides a quick response (QR) code for mobile access to service information. Scan the QR code with a mobile device and a QR code reader application to get quick access to the Lenovo Service web site for this server. The Lenovo Service web site provides additional information for parts installation and replacement videos, and error codes for server support.

The following illustration shows the QR code.

Figure 2. QR code

Server package contents

When you receive your server, verify that the shipment contains everything that you expected to receive.

The server package includes the following items:

Note: Items marked with asterisk (*) are available on some models only.

1. Server
2. Keyboard*
3. Material box, including items such as accessory kit, power cords* and documentation.

Server form factor

The ThinkSystem ST50 V2 server is designed to support both tower and rack form factors.

You can change the server from tower form factor to rack form factor by installing the tower-to-rack conversion kit. For instructions on how to install the tower-to-rack conversion kit, refer to the documentation that comes with the conversion kit.

Features

Performance, ease of use, reliability, and expansion capabilities were key considerations in the design of the server. These design features make it possible for you to customize the system hardware to meet your needs today and provide flexible expansion capabilities for the future.

Your server implements the following features and technologies:

- **UEFI-compliant server firmware**

Lenovo ThinkSystem firmware is Unified Extensible Firmware Interface (UEFI) compliant. UEFI replaces BIOS and defines a standard interface between the operating system, platform firmware, and external devices.

Lenovo ThinkSystem servers are capable of booting UEFI-compliant operating systems, BIOS-based operating systems, and BIOS-based adapters as well as UEFI-compliant adapters.

- **Large system-memory capacity**

  The server supports error-correcting code unbuffered DIMM (ECC UDIMM). For more information about the specific types and maximum amount of memory, see “Specifications” on page 3.

- **Large data-storage capacity and hot-swap capability**

  The server support a maximum of three drives and one slim SATA optical disk drive.

- **Mobile access to Lenovo Service Information website**

  The server provides a QR code on the system service label, which is on the inside of the server cover, that you can scan the QR code with a mobile device and a QR code reader application to get quick access to the Lenovo Service web site for this server. The Lenovo Service Information web site provides additional information for parts installation and replacement videos, and error codes for server support.

- **Lenovo XClarity Provisioning Manager Lite (optional)**

  Lenovo XClarity Provisioning Manager Lite allows you to configure Redundant Array of Independent Disks (RAID), install compatible operating systems as well as associated device drivers, and run diagnostics. For more details, see

  https://pubs.lenovo.com/lxpm-lite/

- **Tremendous durability**

  The system has been verified to run even enterprise workload, 24/7.

Specifications

The following information is a summary of the features and specifications of the server. Depending on the model, some features might not be available, or some specifications might not apply.

Table 1. Specifications, Type 7D8J and 7D8K

Specification	Description
Dimension	4U server • Width: 170 mm (6.7 inches) • Height: 376 mm (14.8 inches) – Height without stands: 370 mm (14.6 inches) • Depth: 315.4 mm (12.4 inches)
Weight (depending on the configuration)	• Maximum: 9.4 kg (20.7 lb)
Processor	This server supports one of the following Intel® processors: • Xeon® E3–23XX • Pentium Gold For a list of supported processors, see https://serverproven.lenovo.com/. **Note:** Xeon® E3–23XX processor without integrated graphics feature does not support the KVM redirection functions; GPU is required when such processor is installed. If a processor with integrated graphics feature and a GPU are installed in the system, the integrated graphics feature and the DisplayPorts will be disabled.

Table 1. Specifications, Type 7D8J and 7D8K (continued)

Specification	Description
Memory	• Slots: four DIMM slots (two channels, two DIMMs per channel) • Minimum capacity: 8 GB • Maximum capacity: 128 GB • DIMM types: – 8GB 1Rx8 3200MT/s ECC UDIMM – 16GB 2Rx8 3200MT/s ECC UDIMM – 32GB 2Rx8 3200MT/s ECC UDIMM **Note:** Pentium processor supports up to 2666 MT/s. For more information on memory module installation rules and supported memory speed, see “Memory module installation rules” on page 45.
Storage expansion	Two 3.5-inch drive bays (one for optional), one 2.5-inch drive bay (optional), one ODD bay, and one M.2 drive. • Drive bay 1 – 3.5-inch hard-disk drive or solid-state drive • Drive bay 2 (Optional) – One 2.5-inch hard-disk drive or solid-state drive • Drive bay 3 (Optional) – One 3.5-inch hard-disk drive or solid-state drive • ODD drive bay (Optional) – One 9mm slim SATA Optical disk drive • M.2 drive (Optional) – One 2280 NVMe PCIe standard M.2 module (for booting)
Expansion slots	Three PCIe expansion slots are available: • PCIe slot 1: PCI Express 4.0 x16 (FHHL 75W PCIe adapter) • PCIe slot 2: PCI Express 3.0 x1 (FHHL, 25W PCIe adapter) • PCIe slot 3: PCI Express 3.0 x4 in x16 slot (FHHL, 25W PCIe adapter) **Notes:** • Pentium processor supports up to PCI Express 3.0. • When installing PCIe x8/x16 adapter to PCIe Slot 3, the PCIe adapter performance might be degraded due to the bandwidth of PCIe slot 3 (x4). • For PXE boot application (Preboot eXecution Environment), it is recommended to install a PXE boot supporting Ethernet adapter for best performance. One M.2 expansion slot is available • One 2280 NVMe PCIe standard M.2 module (for booting) (Optional)

Table 1. Specifications, Type 7D8J and 7D8K (continued)

Specification	Description
Integrated functions	The server supports nine universal serial bus (USB) connectors • On the front of the server – One USB 3.2 Gen 1 Type C port – Two USB 3.2 Gen 1 ports – Two USB 3.2 Gen 2 ports • On the rear of the server – Four USB 3.2 Gen 1 ports **Notes:** • USB 3.2 Gen 1: 5 Gbps = 640 MB/s • USB 3.2 Gen 2: 10 Gbps = 1280 MB/s Connectors and button on the front of the server • Power button with LED • One Mic-in connector* • One combo audio jack connector* Connectors and port on the rear of the server • One 1 GbE RJ-45 Ethernet connector with Intel I219-LM • Two DisplayPort connectors (4K/ 60MHz)† • One serial connector • One audio line-out port* **Note:** * Supported by Windows Client OS only. † Supported by processor with integrated graphic feature only. See the “Processor” section at “Specifications” on page 3 for more information.
Network	• One 1 GbE RJ-45 Ethernet connector with Intel I219-LM. See “Rear view” on page 14. • Supports up to two network adapters. **Note:** For PXE boot application (Preboot eXecution Environment), it is recommended to install a PXE boot supporting Ethernet adapter for best performance. For a list of supported network adapters, see https://serverproven.lenovo.com/.
Systems management	• Intel®Active Management Technology (AMT) 15.0 • Lenovo XClarity Provisioning Manager Lite (optional). • TPM 2.0 embedded **Notes:** • Make sure the power is on when executing remote access and power policy setup. • Ignore the warning message “Unrecoverable PS/2 or USB keyboard failure,” because the system does not support PS/2 devices. • Some Lenovo systems management applications, including XClarity Administrator, XClarity Controller, XClarity Energy Manager, and XClarity Essentials, are not supported by ST50 V2. • For information on the Lenovo XClarity Provisioning Manager Lite, see the LXPM documentation compatible with your server at https://pubs.lenovo.com/lxpm-overview/ .

Table 1. Specifications, Type 7D8J and 7D8K (continued)

Specification	Description
RAID (depending on model)	**Software RAID** Onboard 6 Gb SATA controller that supports AHCI mode (JBOD) or RSTe mode (RAID). RSTe mode supports RAID 0, 1 and 5. **Hardware RAID** The server supports RAID level 0 and 1. The RAID adapter should be installed in PCIe slot 1. The following RAID adapter options are available for this server: • ThinkSystem 4350-8i SAS/SATA 12Gb HBA • ThinkSystem RAID 5350-8i PCIe 12Gb Adapter For a list of supported adapters, see: https://serverproven.lenovo.com/. **Note:** Hard-disk drives or solid-state drives can be installed in the same server but are not supported in the same RAID array.
Graphics processing unit (GPU) adapter	The following option GPU adapter is available for this server: • ThinkSystem NVIDIA Quadro T1000 8GB PCIe Active GPU – Must be installed in PCIe expansion slot 1 – This GPU adapter supports 8K resolution. – It is recommend to use certified display adapter cables.
Fans	This server supports up to three fans: • When processor TDP is lower than 95 watts – One front fan – One rear fan (only when drive bay 3 is installed) – One processor heat sink fan • When processor TDP is 95 watts – One front fan – One processor heat sink fan
Electrical input	This server supports one of the following non-hot-swap, non-redundant power supplies: • Fixed ATX 300 watt Single-Output Gold – Input power 115Vac or 230Vac This power supply does not support Intel Xeon® E3–2388G and E3–2378. • Fixed ATX 500 watt Multi-Output Platinum – Input power 115Vac or 230Vac
Minimal configuration for debugging	• One processor • One 8 GB ECC UDIMM in slot 1 • One power supply • One 3.5-inch drive in drive bay 1 • Power cord • One system front fan

Table 1. Specifications, Type 7D8J and 7D8K (continued)

Specification	Description
Acoustical noise emissions	• Sound power level (L_{WAd}): – Idling – Typical: 3.5 Bel – Maximum: 5.0 Bel – Operating – Typical: 5.4 Bel – Maximum: 5.4 Bel • Sound pressure level (L_{pAm}): – Idling – Typical: 25 dBA – Maximum: 37 dBA – Operating – Typical: 40 dBA – Maximum: 40 dBA **Notes:** 1. These sound levels were measured in controlled acoustical environments according to procedures specified by ISO 7779 and are reported in accordance with ISO 9296. 2. The declared acoustic sound levels are based on the following configurations, which may change depending on configuration/conditions: • Typical: 1x 80W CPU, 4x 32GB DIMM, 2x HDD or SSD, 1x 960G M.2, RAID 5350-8i, 1x 300W PSU • Maximum: 1x 95W CPU, 4x 32GB DIMM, 2x HDD or SSD, 1x 960G M.2, 1x T1000GPU, 1x 500W PSU
Heat output	Approximate heat output: • Minimum configuration: 443 BTU, 130 W (in BTU per hour and watts) • Maximum configuration: 754 BTU, 221 W (in BTU per hour and watts)

Table 1. Specifications, Type 7D8J and 7D8K (continued)

Specification	Description
Environment	ThinkSystem ST50 V2 complies with ASHRAE Class A2 specifications. • Air temperature: – Operating – ASHRAE Class A2: 10°C to 35°C (50°F to 95°F); the maximum ambient temperature decreases by 1°C for every 300 m (984 ft) increase in altitude above 900 m (2,953 ft). – Server off: -10°C to 60°C (14°F to 140°F) – Shipment/storage: -20°C to 60°C (-4°F to 140°F) • Maximum altitude: 3,050 m (10,000 ft) • Relative Humidity (non-condensing): – Operating – ASHRAE Class A2: 8% to 80%; maximum dew point: 21°C (70°F) – Shipment/storage: 8% to 90% • Particulate contamination **Attention:** Airborne particulates and reactive gases acting alone or in combination with other environmental factors such as humidity or temperature might pose a risk to the server. For information about the limits for particulates and gases, see "Particulate contamination" on page 8.
Operating systems	Supported and certified operating systems: • Microsoft Windows Server • VMware ESXi • Red Hat Enterprise Linux • SUSE Linux Enterprise Server • Ubuntu References: • Complete list of available operating systems: https://lenovopress.lenovo.com/osig. • OS deployment instructions: "Deploy the operating system" on page 106.

Particulate contamination

Attention: Airborne particulates (including metal flakes or particles) and reactive gases acting alone or in combination with other environmental factors such as humidity or temperature might pose a risk to the device that is described in this document.

Risks that are posed by the presence of excessive particulate levels or concentrations of harmful gases include damage that might cause the device to malfunction or cease functioning altogether. This specification sets forth limits for particulates and gases that are intended to avoid such damage. The limits must not be viewed or used as definitive limits, because numerous other factors, such as temperature or moisture content of the air, can influence the impact of particulates or environmental corrosives and gaseous contaminant transfer. In the absence of specific limits that are set forth in this document, you must implement practices that maintain particulate and gas levels that are consistent with the protection of human health and safety. If Lenovo determines that the levels of particulates or gases in your environment have caused damage to the device, Lenovo may condition provision of repair or replacement of devices or parts on implementation of appropriate remedial measures to mitigate such environmental contamination. Implementation of such remedial measures is a customer responsibility.

Table 2. Limits for particulates and gases

Contaminant	Limits
Reactive gases	Severity level G1 as per ANSI/ISA 71.04-1985[1]: • The copper reactivity level shall be less than 200 Angstroms per month (Å/month ≈ 0.0035 µg/cm^2-hour weight gain).[2] • The silver reactivity level shall be less than 200 Angstroms per month (Å/month ≈ 0.0035 µg/cm^2-hour weight gain).[3] • The reactive monitoring of gaseous corrosivity must be conducted approximately 5 cm (2 in.) in front of the rack on the air inlet side at one-quarter and three-quarter frame height off the floor or where the air velocity is much higher.
Airborne particulates	Data centers must meet the cleanliness level of ISO 14644-1 class 8. For data centers without airside economizer, the ISO 14644-1 class 8 cleanliness might be met by choosing one of the following filtration methods: • The room air might be continuously filtered with MERV 8 filters. • Air entering a data center might be filtered with MERV 11 or preferably MERV 13 filters. For data centers with airside economizers, the choice of filters to achieve ISO class 8 cleanliness depends on the specific conditions present at that data center. • The deliquescent relative humidity of the particulate contamination should be more than 60% RH.[4] • Data centers must be free of zinc whiskers.[5]

[1] ANSI/ISA-71.04-1985. *Environmental conditions for process measurement and control systems: Airborne contaminants*. Instrument Society of America, Research Triangle Park, North Carolina, U.S.A.

[2] The derivation of the equivalence between the rate of copper corrosion growth in the thickness of the corrosion product in Å/month and the rate of weight gain assumes that Cu_2S and Cu_2O grow in equal proportions.

[3] The derivation of the equivalence between the rate of silver corrosion growth in the thickness of the corrosion product in Å/month and the rate of weight gain assumes that Ag_2S is the only corrosion product.

[4] The deliquescent relative humidity of particulate contamination is the relative humidity at which the dust absorbs enough water to become wet and promote ionic conduction.

[5] Surface debris is randomly collected from 10 areas of the data center on a 1.5 cm diameter disk of sticky electrically conductive tape on a metal stub. If examination of the sticky tape in a scanning electron microscope reveals no zinc whiskers, the data center is considered free of zinc whiskers.

Chapter 2. Server components

This section provides information that helps locate the server components.

Front view

Read this section to identify important components on the front of this server.

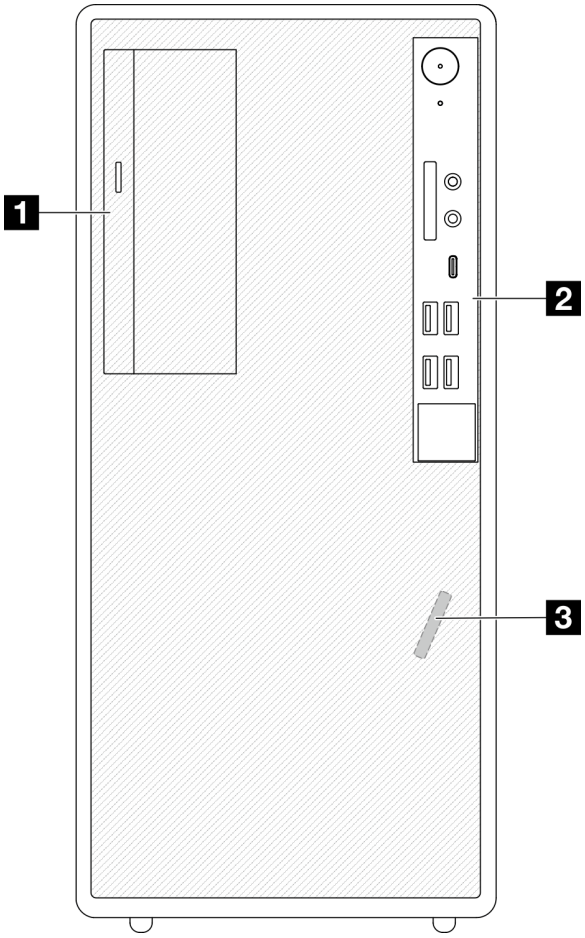

Figure 3. Front view

Table 3. Front view

1 Slim SATA optical disk drive (optional)
2 Front panel. See “Front panel” on page 11 for more information.
3 Front thermal sensor

Front panel

Some crucial key controls, connectors, and LEDs are located on the front panel of the server.

The following illustration shows the controls, connectors, and LEDs on the front panel of the server.

© Copyright Lenovo 2022, 2025

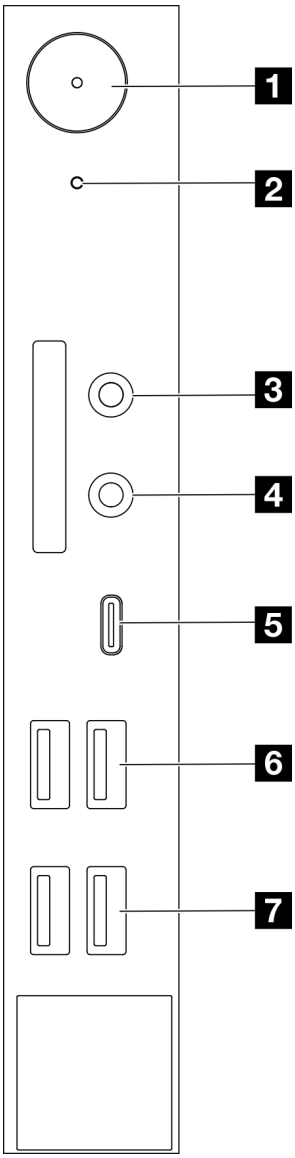

Figure 4. Components on the front panel

Table 4. Components on the front panel

1 Power button with power status (white)	5 USB Type-C 3.2 Gen2 connector
2 Drive activity LED (white)	6 Two USB 3.1 Gen1 connectors
3 Mic-in connector (Windows Client OS only)	7 Two USB 3.2 Gen 2 connectors
4 Headset connector (Windows Client OS only)	

Notes:

- USB 3.2 Gen 1: 5 Gbps = 640 MB/s
- USB 3.2 Gen 2: 10 Gbps = 1280 MB/s

1 Power button with power status LED (white)

Press the power button to turn on the server, or hold it for several seconds to turn the server off when the server cannot be turned off in the operating system. The power status LED helps determine the current power status.

Table 5. Power button LED behavior

Status	Color	Description
Solid on	White	DC power is present and the server is on.
Off	None	No DC power is present and the server is off.

2 Drive activity LED (white)

This LED indicates the activity of the drives.

Note: The drive activity LED only indicates the activities of drives that are connected to the SATA ports on the system board.

Table 6. Drive activity LED behavior

Status	Color	Description
Solid on	White	The drives are active.
Off	None	The drives are not active.

3 Mic-in connector

Plug in microphone to this connector.

Note: This connector is only supported by Windows Client OS.

4 Headset connector

Plug in headset with microphone to this connector. A standard headphone or microphone can also be plugged into the connector.

Note: This connector is only supported by Windows Client OS.

5 USB Type-C 3.2 Gen2 connector

One USB Type-C 3.2 Gen2 connector on the front panel that is available for a device that require USB 2.0 or 3.0 connection, such as a keyboard, a mouse, or a USB flash drive.

6 Two USB 3.1 Gen1 connectors

There are two USB 3.1 Gen1 connectors on the front panel. These connectors are available for a device that require USB 3.0 connection, such as a keyboard, a mouse, or a USB flash drive.

7 Two USB 3.1 Gen2 connectors

There are two USB 3.1 Gen2 connectors on the front panel. These connectors are available for a device that require USB 3.0 connection, such as a keyboard, a mouse, or a USB flash drive.

Side view

See this topic to learn about the components visible from the side of the server.

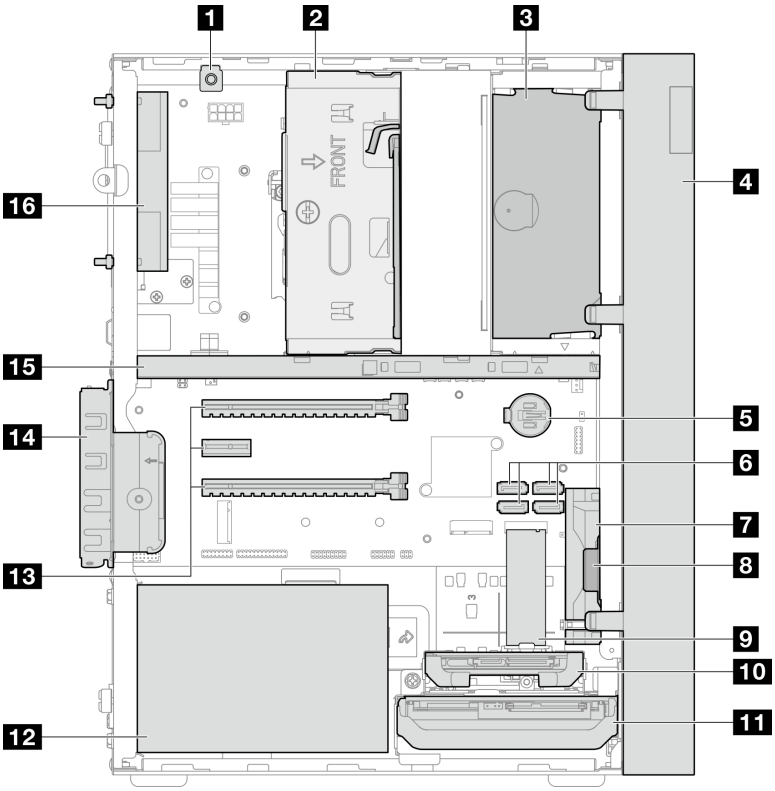

Figure 5. Side view

Table 7. Side view

1 Intrusion switch	9 M.2 drive*
2 Drive bay 3 (One 3.5-inch SATA drive)*	10 Drive bay 2 (One 2.5-inch SATA drive)*
3 ODD drive bay (One 9mm slim SATA Optical disk drive) *	11 Drive bay 1 (One 3.5-inch SATA drive)
4 Front bezel	12 Power supply unit
5 3V CMOS battery (CR2032)	13 PCIe slot 1–3
6 SATA 1–4 connectors	14 PCIe adapter retainer
7 Front fan	15 Cage bar
8 Mono amplifier (speaker)	16 Rear fan

* Optional components.

Rear view

Refer this section to identify important components on the rear of the server.

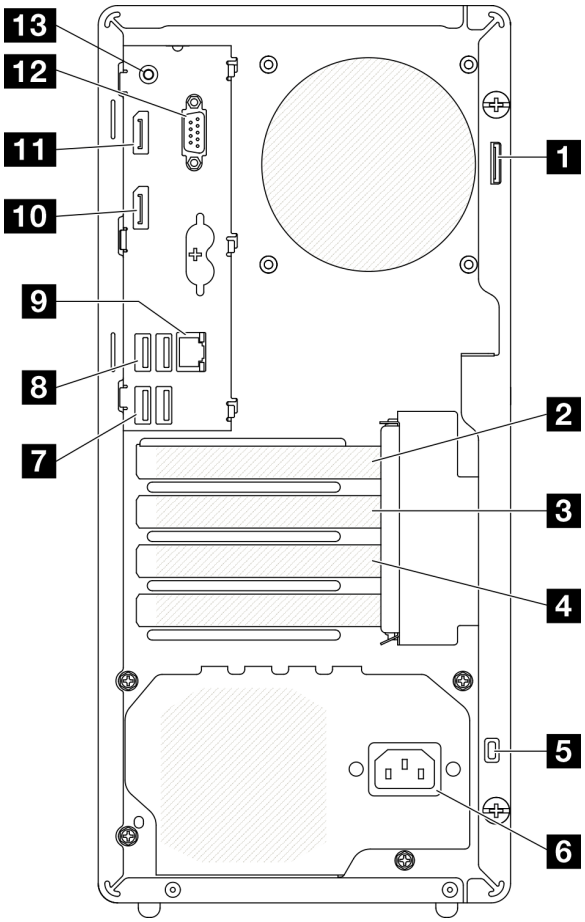

Figure 6. Rear view

Table 8. Rear view

1 Padlock loop	8 Two USB 3.2 Gen1 connectors
2 PCIe slot 1	9 1 GB RJ45 Ethernet connector
3 PCIe slot 2	10 DisplayPort 2 connector (Supported by processor with integrated graphic feature only.)
4 PCIe slot 3	11 DisplayPort 1 connector (Supported by processor with integrated graphic feature only.)
5 Kensington lock	12 Serial port connector
6 Power cord connector	13 Audio line-out connector (Windows Client OS only)
7 Two USB 3.2 Gen1 connectors	

Notes:

- USB 3.2 Gen 1: 5 Gbps = 640 MB/s
- USB 3.2 Gen 2: 10 Gbps = 1280 MB/s

1 Padlock loop

This loop is available for installing a padlock. See “Server locks” on page 17 for more information.

2 PCIe slot 1

PCIe slot 1 is a PCI Express 4.0 x16 expansion slot that is compatible with FHHL 75W PCIe adapter.

3 PCIe slot 2

PCIe slot 2 is a PCI Express 3.0 x1 slot that is compatible with FHHL 25W PCIe adapter.

4 PCIe slot 3

PCIe slot 3 is a PCI Express 3.0 x4 in x16 slot that is compatible with FHHL 25W PCIe adapter.

5 Kensington lock

This loop is available for installing a Kensington lock. See “Server locks” on page 17 for more information.

6 Power cord connector

Connect the power cord to this component.

7 8 USB 3.2 Gen1 connectors

There are four USB 3.1 Gen1 connectors on the front panel. These connectors are available for a device that require USB 3.0 connection, such as a keyboard, a mouse, or a USB flash drive.

9 1 GB RJ45 Ethernet connector

Connect an Ethernet cable to this connector for a LAN . This connector comes with LED for status indication.

Table 9. Ethernet connector LED behavior

Color	Description
Yellow	The network is connected and active.
Orange	The network bandwidth is 1Gb
Green	The network bandwidth is 100MB

10 11 DisplayPort connectors

Connect a DisplayPort-compatible video device, such as a monitor, to this connector.

Supported by processor with integrated graphic feature only. See the “Processor” section at “Specifications” on page 3 for more information.

12 Serial port connector

Connect a 9-pin serial device to this connector.

13 Audio line-out connector

Connect a audio device, such as speakers or earphones, to this connector.

Notes:

1. This connector is only supported by Windows Client OS.
2. User may be aware of the low frequency noise via audio port in particular environments.
3. Excessive sound pressure from earphone/headphone can cause hearing damage.

Server locks

Locking the server cover prevents unauthorized access to the inside of your server.

Kensington-style cable lock

You can use a Kensington-style cable lock to secure your server to a desk, table, or other non-permanent fixture. The cable lock attaches to the security-lock slot at the rear of the server, and is operated with a key or combination. The cable lock also locks the buttons used to remove the server cover. This is the same type of lock used with many notebook computers. You can order an integrated cable lock directly from Lenovo by searching for Kensington at:

http://datacentersupport.lenovo.com

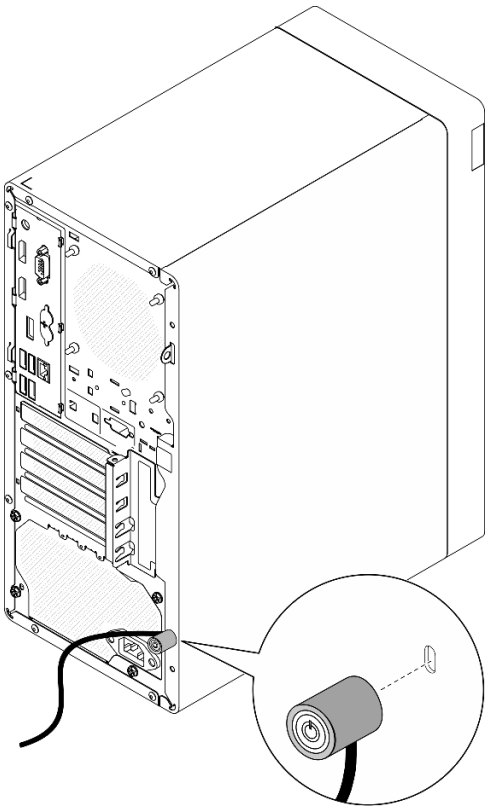

Figure 7. Kensington-style cable lock

Padlock

This server comes with a padlock loop. When a padlock is installed, the server cover cannot be removed.

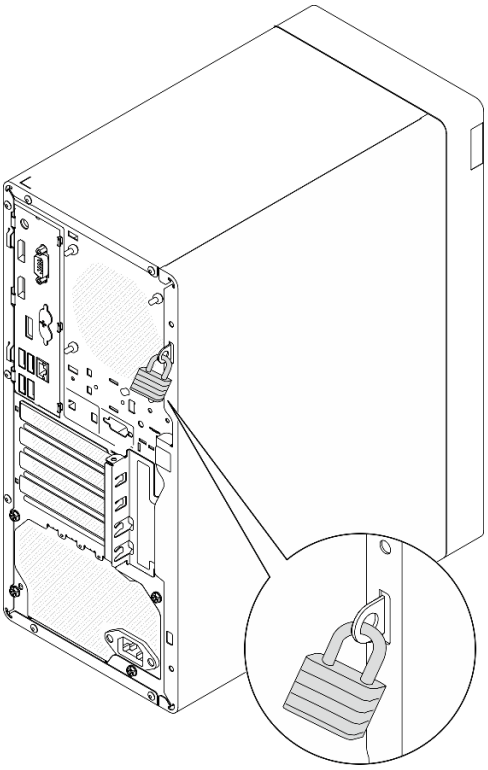

Figure 8. Padlock

System board components

The illustration in this section shows the component locations on the system board.

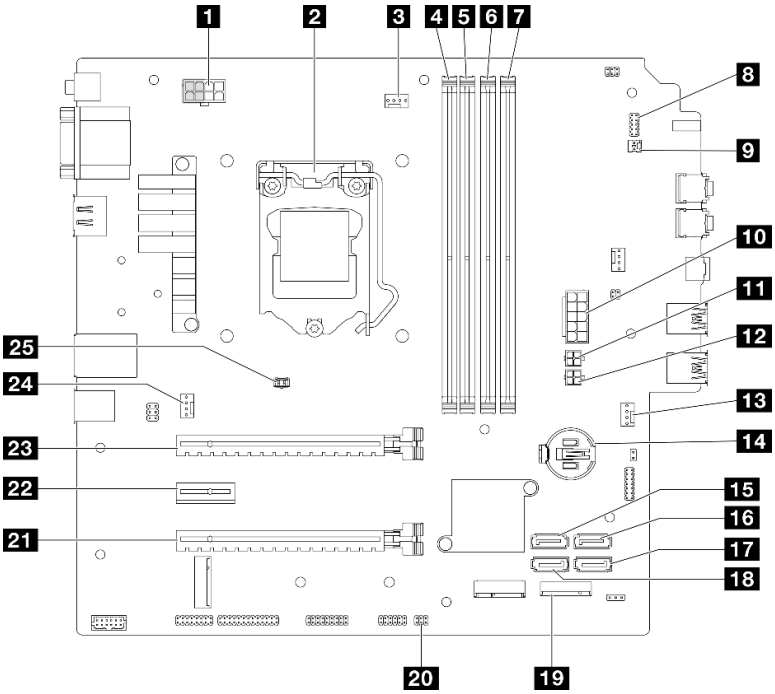

Figure 9. System board components

Table 10. Components on the system board

1 Processor power connector **Note:** The 2x2 pins marked in grey are for 300W PSU.	14 3V battery (CR2032)
2 Processor	15 SATA 3 connector (drive bay 3)
3 Processor heat sink fan power connector	16 SATA 4 connector (ODD drive)
4 Memory module slot 1	17 SATA 2 connector (drive bay 2)
5 Memory module slot 2	18 SATA 1 connector (drive bay 1)
6 Memory module slot 3	19 M.2 connector
7 Memory module slot 4	20 Thermal sensor connector
8 Power button with LED connector	21 PCIe slot 3 (PCI Express 3.0 x4)
9 Mono amplifier (speaker) connector	22 PCIe slot 2 (PCI Express 3.0 x1)
10 System power connector	23 PCIe slot 1 (PCI Express 4.0 x16)
11 SATA power 1 connector	24 Rear fan connector
12 SATA power 2 connector	25 Intrusion switch connector
13 Front fan connector	

RAID adapters

Use this information to locate the connectors on the optional RAID adapters.

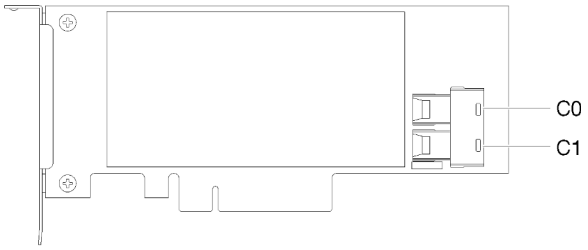

Figure 10. Connectors on SATA/SAS RAID adapter (8i)

Note: The RAID adapter should be installed in PCIe slot 1.

Internal cable routing

Some of the components in the server come with internal cables meant for specific connectors.

Cable routing guidelines

Before connecting the cables, read the following guidelines carefully:

- Turn off the server before you connect or disconnect any internal cables.
- Refer to the documentation that comes with any external devices for additional cabling instructions.
- Make use of the identifiers printed on the cables to locate the proper connectors.
- Ensure that the cable is not pinched and does not cover any connectors or obstruct any components on the system board.

Attention: Disengage all latches, release tabs, or locks on cable connectors when you disconnect cables from the system board. Failing to release them before removing the cables will damage the cable sockets on the system board, which are fragile. Strictly observe the following instructions to avoid damaging cable sockets on the system board. Any damage to the cable sockets might require replacing the system board.

- Connect cable connectors vertically or horizontally in alignment with the orientations of the corresponding cable sockets, avoiding any tilt.
- To disconnect cables from the system board, do as follows:
  1. Press and hold all latches, release tabs, or locks on cable connectors to release the cable connectors.
  2. Remove the cable connectors vertically or horizontally in alignment with the orientations of the corresponding cable sockets, avoiding any tilt.

     Note: The cable connectors might look different from those in the illustration, but the removal procedure is the same.

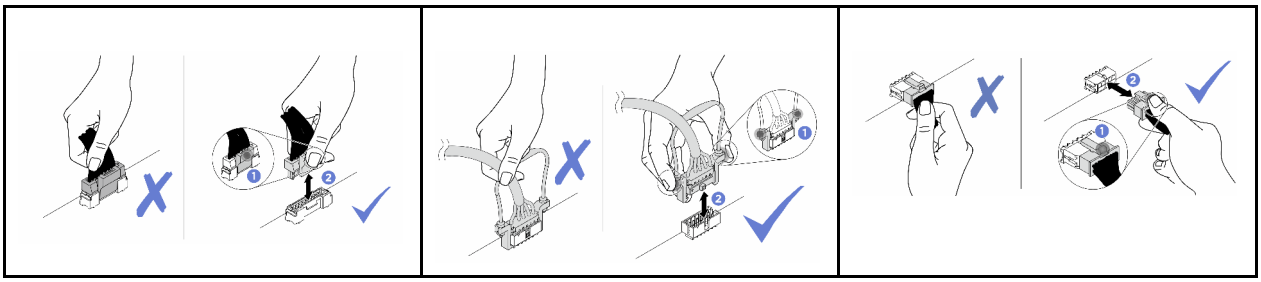

Cable routing for drive bay 1 and bay 2

Read this section to learn about cable routing for the drive in bay 1 and bay 2.

Drive bay 1

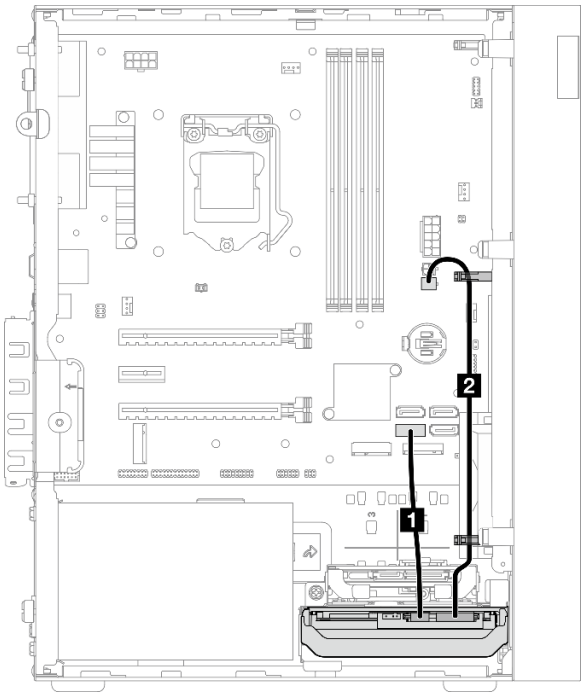

Figure 11. Cable routing for drive bay 1

Table 11. Cable routing for drive bay 1

Cable	From	To
1 1st 3.5 or 2.5 HDD SATA cable, 185 mm	Bay 1 drive signal connector	SATA 1 connector
2 1st 3.5 and 2.5 HDD Power Cable (300 mm + 80 mm)	Bay 1 drive power connector	SATA power 2 connector

Make sure to follow the “Cable routing guidelines” in “Internal cable routing” on page 19.

For the system-board connector locations, see “System board components” on page 18.

Drive bay 2

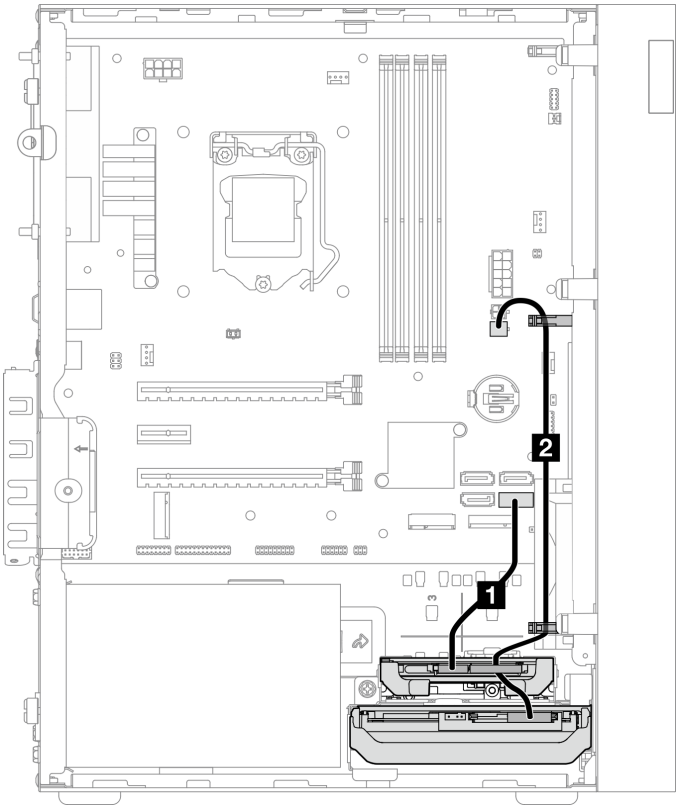

Figure 12. Cable routing for drive bay 2

Table 12. Cable routing for drive bay 2

Cable	From	To
1 1st 3.5 or 2.5 HDD SATA cable, 185 mm	Bay 2 drive signal connector	SATA 2 connector
2 1st 3.5 and 2.5 HDD Power Cable (300 mm + 80 mm)	Bay 2 drive power connector and bay 1 drive power connector	SATA power 2 connector

Make sure to follow the “Cable routing guidelines” in “Internal cable routing” on page 19.

For the system-board connector locations, see “System board components” on page 18.

Cable routing for drive bay 3

Read this section to learn about cable routing for the drive in bay 3.

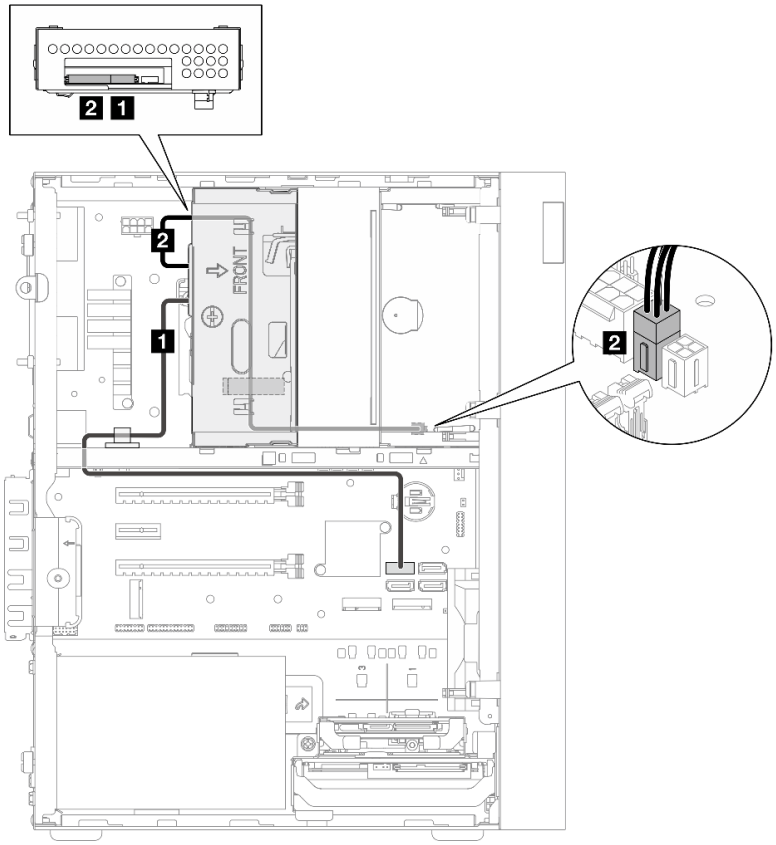

Figure 13. Cable routing for drive bay 3

Table 13. Cable routing for drive bay 3

Cable	From	To
1 SATA cable 1 latch (520 mm)	Bay 3 drive signal connector	SATA 3 connector
2 Slim ODD, second 3.5-inch drive and 2.5-inch drive power cable (300 mm + 210 mm + 110 mm)	Bay 3 drive power connector	SATA power 1 connector

Make sure to follow the “Cable routing guidelines” in “Internal cable routing” on page 19.

For the system-board connector locations, see “System board components” on page 18.

Cable routing for optical disk drive

Read this section to learn about cable routing for the optical disk drive.

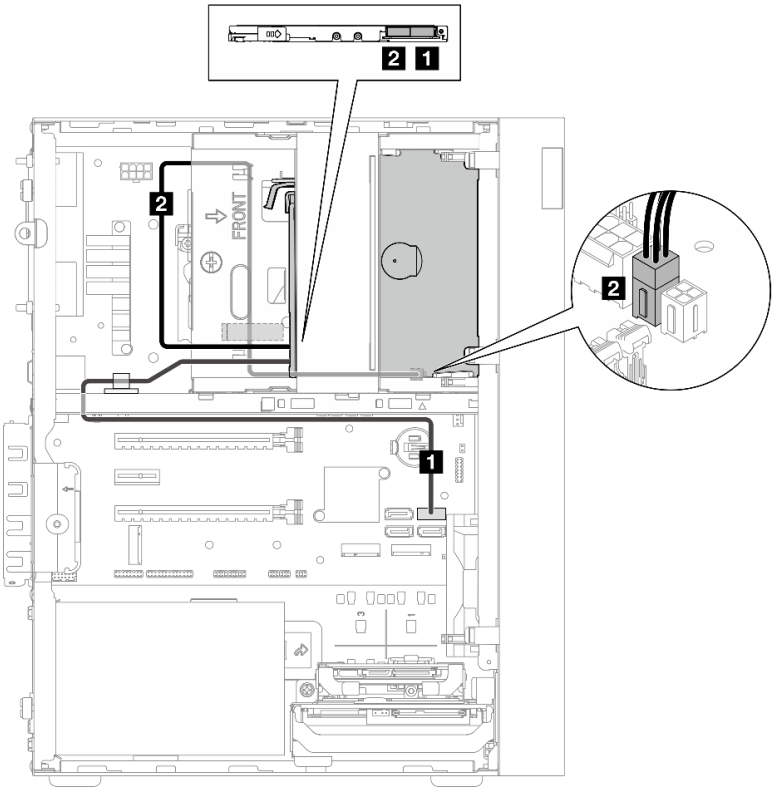

Figure 14. Cable routing for optical disk drive

Table 14. Cable routing for optical disk drive

Cable	From	To
1 SATA cable 1 latch (520 mm)	Optical disk drive signal connector	SATA 4 connector
2 Slim ODD, second 3.5-inch drive and 2.5-inch drive power cable (300 mm + 210 mm + 110 mm)	Optical disk drive power connector	SATA power 1 connector

Make sure to follow the “Cable routing guidelines” in “Internal cable routing” on page 19.

For the system-board connector locations, see “System board components” on page 18.

Cable routing for the RAID adapter and drives

Read this section to learn about cable routing for the RAID adapter and drives.

RAID adapter cable

The break lines indicate that part of the cable is hidden in the illustration.

The server supports two types of RAID adapter cables.

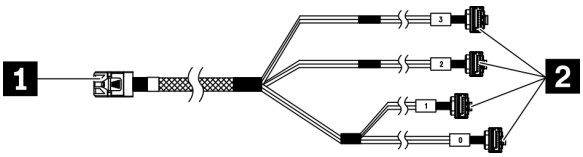

Figure 15. Mini SAS HD to 4 SATA 7-pin cable

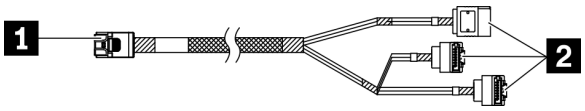

Figure 16. Mini SAS HD to 3 SATA 7-pin cable

Table 15. RAID adapter cable

1 Connector for the RAID adapter (connector C0). See “RAID adapters” on page 19.	**2** Connectors for the drives

Cable routing for three drives with the RAID adapter

Note: The RAID adapter should be installed in PCIe slot 1.

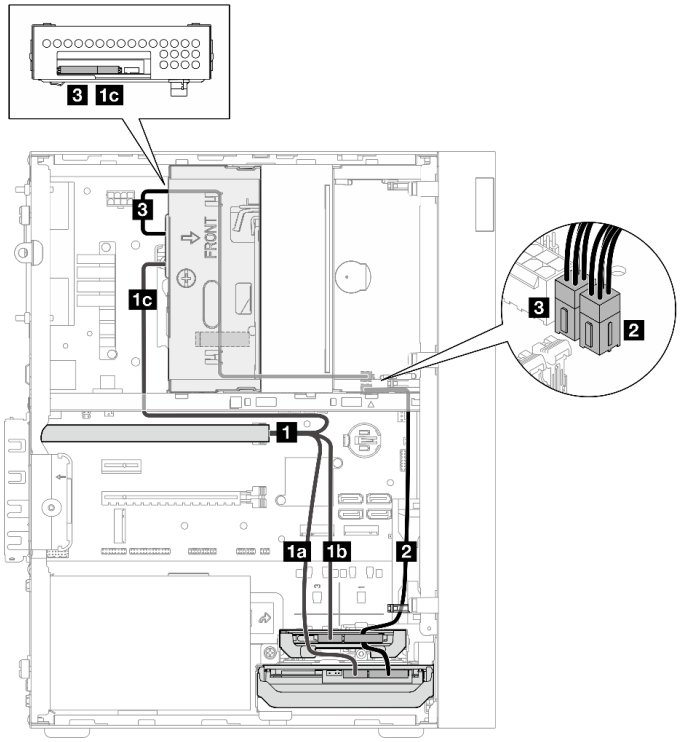

Figure 17. Cable routing for three drives with the RAID adapter

Table 16. Cable routing for three drives with the RAID adapter

Cable		From	To
1 Mini SAS HD to SATA 7-pin cable	1a • MSAS to 4 SATA: cable labeled as “0” • MSAS to 3 SATA: cable labeled as “1”	Bay 1 drive signal connector	C0 connector on the RAID adapter
	1b • MSAS to 4 SATA: cable labeled as “1” • MSAS to 3 SATA: cable labeled as “2”	Bay 2 drive signal connector	
	1c • MSAS to 4 SATA: cable labeled as “2” • MSAS to 3 SATA: cable labeled as “3”	Bay 3 drive signal connector	
2 1st 3.5 and 2.5 HDD Power Cable (300 mm + 80 mm)		Bay 2 drive power connector and bay 1 drive power connector	SATA power 2 connector
3 Slim ODD, second 3.5-inch drive and 2.5-inch drive power cable (300 mm + 210 mm + 110 mm)		Bay 3 drive power connector	SATA power 1 connector

Make sure to follow the “Cable routing guidelines” in “Internal cable routing” on page 19.

For the system-board connector locations, see “System board components” on page 18.

Cable routing for two drives with the RAID adapter

Note: The RAID adapter should be installed in PCIe slot 1.

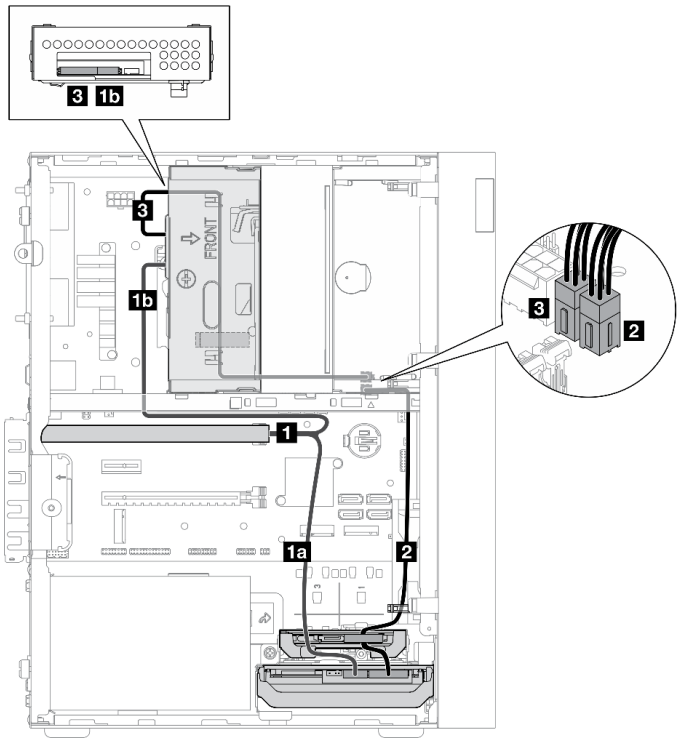

Figure 18. Cable routing for two drives with the RAID adapter

Table 17. Cable routing for two drives with the RAID adapter

Cable		From	To
1 Mini SAS HD to SATA 7-pin cable	1a • MSAS to 4 SATA: cable labeled as “0” • MSAS to 3 SATA: cable labeled as “1”	Bay 1 drive signal connector	C0 connector on the RAID adapter
	1b • MSAS to 4 SATA: cable labeled as “2” • MSAS to 3 SATA: cable labeled as “3”	Bay 3 drive signal connector	
2 1st 3.5 and 2.5 HDD Power Cable (300 mm + 80 mm)		Bay 2 drive power connector* and bay 1 drive power connector **Note:** * Depending on server configuration.	SATA power 2 connector
3 Slim ODD, second 3.5-inch drive and 2.5-inch drive power cable (300 mm + 210 mm + 110 mm)		Bay 3 drive power connector	SATA power 1 connector

Make sure to follow the “Cable routing guidelines” in “Internal cable routing” on page 19.

For the system-board connector locations, see “System board components” on page 18.

Cable routing for the power supply unit

Read this section to learn about cable routing for the power supply unit.

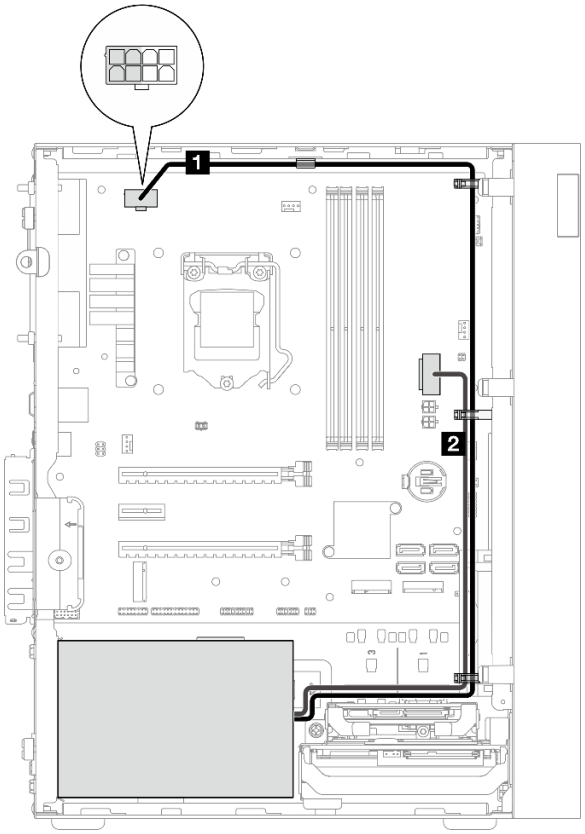

Figure 19. Cable routing for the power supply unit

Table 18. Cable routing for the power supply unit

From	To
1 Micro-fit to 1X15P and 1X4P Y-splitter power cable (4-pin or 8-pin SATA connector for processor power)	Processor power connector **Note:** The 2x2 pins marked in grey are for 300W PSU.
2 Micro-fit to 1X15P and 1X4P Y-splitter power cable (15-pin connector for system power)	System power connector

Note: 1 and 2 are parts of the same Y-splitter cable.

Make sure to follow the “Cable routing guidelines” in “Internal cable routing” on page 19.

For the system-board connector locations, see “System board components” on page 18.

Cable routing for the front fan and rear fan

Read this section to learn about cable routing for the front fan and rear fan.

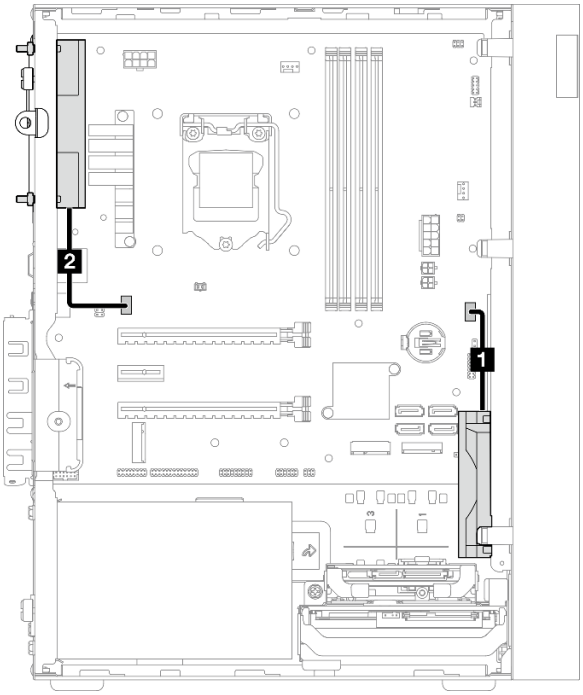

Figure 20. Cable routing for the front fan and rear fan

Table 19. Cable routing for the heat sink and fan module

From	To
1 Front fan cable	Front fan connector
2 Rear fan cable	Rear fan connector

Make sure to follow the “Cable routing guidelines” in “Internal cable routing” on page 19.

For the system-board connector locations, see “System board components” on page 18.

Cable routing for the heat sink and fan module

Read this section to learn about cable routing for the heat sink and fan module.

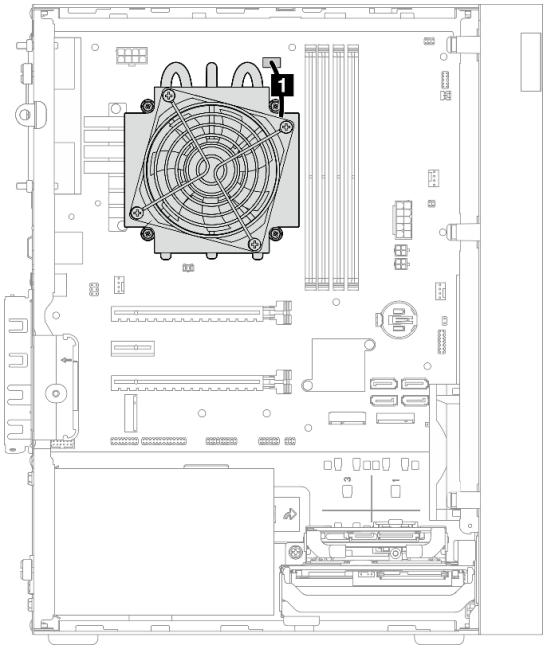

Figure 21. Cable routing for the heat sink and fan module for processor with TDP lower than 95W

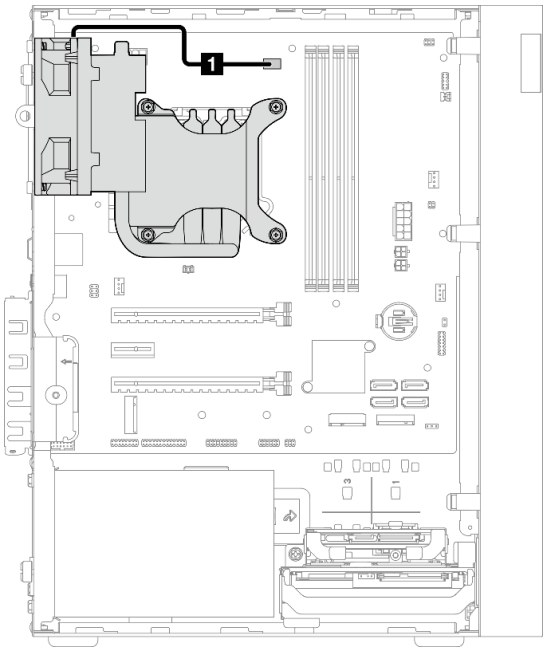

Figure 22. Cable routing for the heat sink and fan module for processor with 95W TDP

Table 20. Cable routing for the heat sink and fan module

From	To
1 Heat sink and fan module cable	Processor heat sink fan power connector

Make sure to follow the “Cable routing guidelines” in “Internal cable routing” on page 19.

For the system-board connector locations, see “System board components” on page 18.

Cable routing for the intrusion switch

Read this section to learn about cable routing for the intrusion switch.

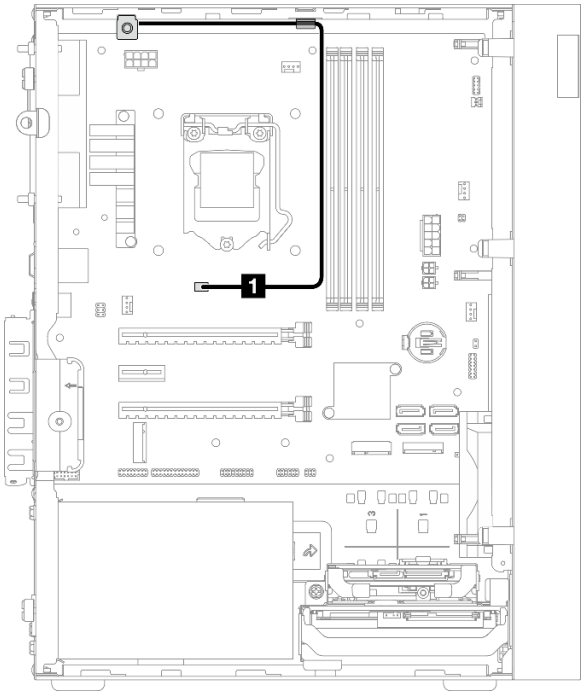

Figure 23. Cable routing for the intrusion switch

Table 21. Cable routing for the intrusion switch

From	To
1 Intrusion switch cable	Intrusion switch connector

For the system-board connector locations, see “System board components” on page 18.

Cable routing for the thermal sensor

Read this section to learn about cable routing for the thermal sensor.

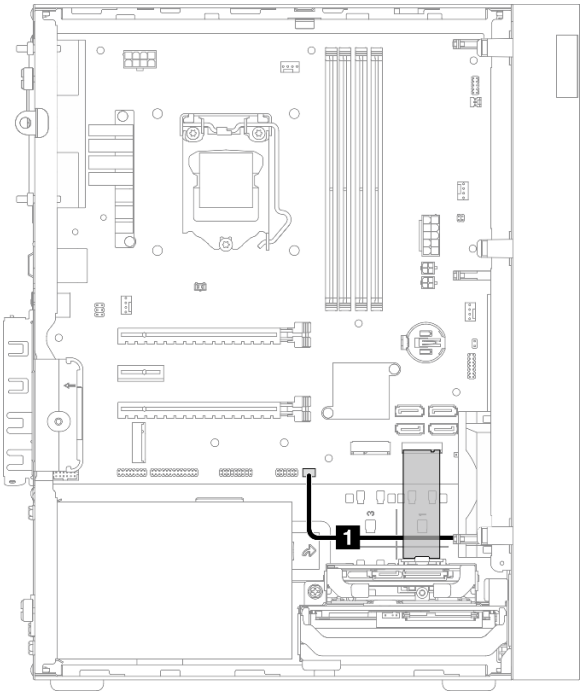

Figure 24. Cable routing for the thermal sensor

Table 22. Cable routing for the thermal sensor

From	To
1 Thermal sensor cable	Thermal sensor connector

Note: If applicable, place the thermal sensor cable under the M.2 drive.

Make sure to follow the “Cable routing guidelines” in “Internal cable routing” on page 19.

For the system-board connector locations, see “System board components” on page 18.

Cable routing for the mono amplifier

Read this section to learn about cable routing for the mono amplifier.

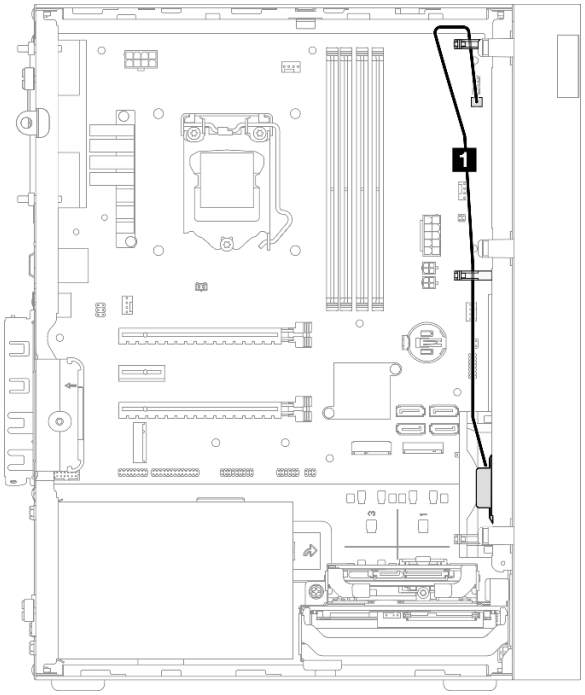

Figure 25. Cable routing for the mono amplifier

Table 23. Cable routing for the mono amplifier

From	To
1 Mono amplifier cable	Mono amplifier connector

Make sure to follow the “Cable routing guidelines” in “Internal cable routing” on page 19.

For the system-board connector locations, see “System board components” on page 18.

Cable routing for the power button with LED

Read this section to learn about cable routing for the power button with LED.

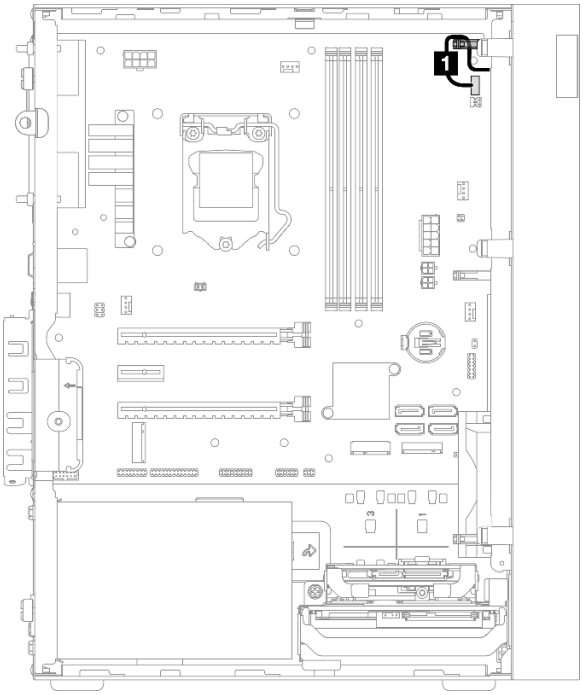

Figure 26. Cable routing for the power button with LED

Table 24. Cable routing for the power button with LED

From	To
1 Power button with LED cable	Power button with LED connector

Make sure to follow the “Cable routing guidelines” in “Internal cable routing” on page 19.

For the system-board connector locations, see “System board components” on page 18.

Parts list

Use the parts list to identify each of the components that are available for your server.

Note: Depending on the model, your server might look slightly different from the illustration.

For more information about ordering parts:

1. Go to http://datacentersupport.lenovo.com and navigate to the support page for your server.
2. Click **Parts**.
3. Enter the serial number to view a listing of parts for your server.

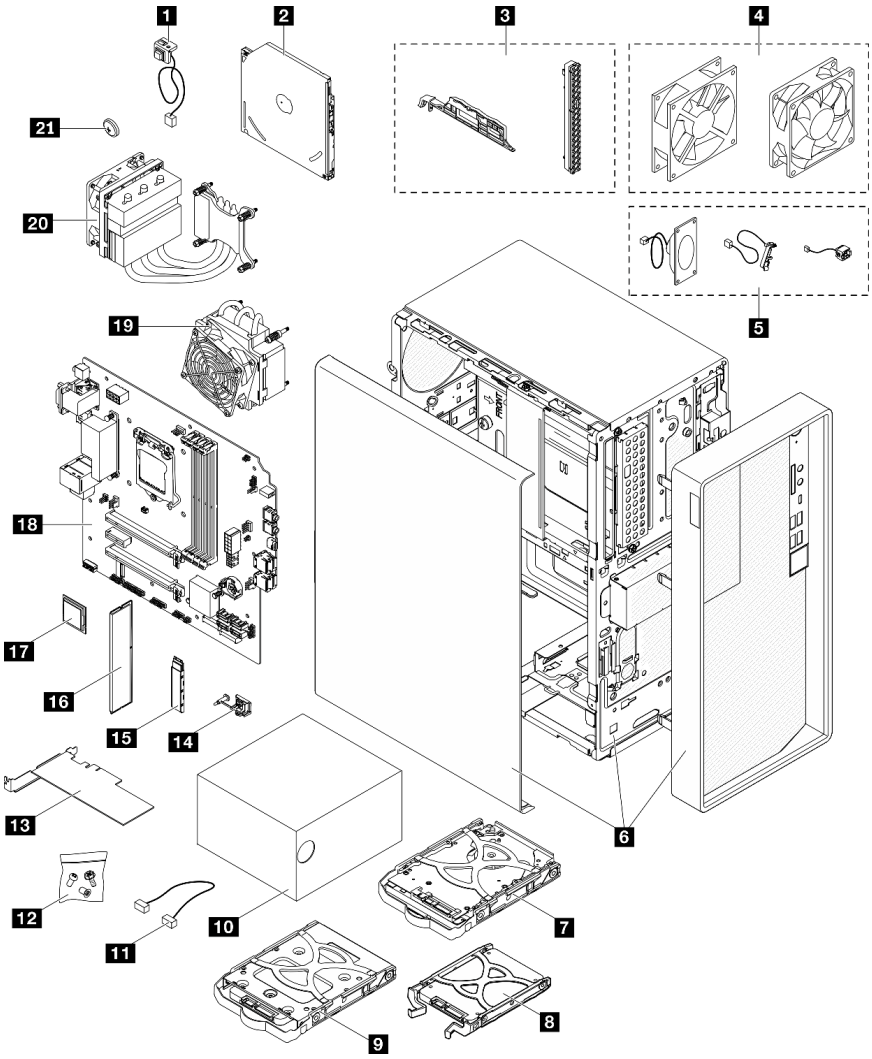

Figure 27. Server components

The parts listed in the following table are identified as one of the following:

- **Tier 1 customer replaceable unit (CRU):** Replacement of Tier 1 CRUs is your responsibility. If Lenovo installs a Tier 1 CRU at your request with no service agreement, you will be charged for the installation.
- **Tier 2 customer replaceable unit (CRU):** You may install a Tier 2 CRU yourself or request Lenovo to install it, at no additional charge, under the type of warranty service that is designated for your server.

- **Field replaceable unit (FRU):** FRUs must be installed only by trained service technicians.
- **Consumable and Structural parts:** Purchase and replacement of consumable and structural parts is your responsibility. If Lenovo acquires or installs a structural component at your request, you will be charged for the service.

Table 25. Parts listing

Index	Description	Tier 1 CRU	Tier 2 CRU	FRU	Consumable and Structural parts
For more information about ordering parts: 1. Go to http://datacentersupport.lenovo.com and navigate to the support page for your server. 2. Click **Parts**. 3. Enter the serial number to view a listing of parts for your server.					
1	Intrusion switch	√			
2	Optical disk drive		√		
3	Bezel kit (including the optical disk drive bezel and latch)			√	
4	Fan kit (including the front fan and rear fan)	√			
5	Cable kit (including the mono amplifier, thermal sensor, and the power button cable)	√			
6	Chassis (with front bezel and server cover)			√	
7	3.5-inch hard-disk drive assembly	√			
8	2.5-inch solid-state drive assembly	√			
9	3.5-inch solid-state drive assembly	√			
10	Power supply unit	√			
11	Cable	√			
12	Screw kit	√			
13	PCIe adapter	√			
14	M.2 drive retainer	√			
15	M.2 drive	√			
16	Memory module	√			
17	Processor			√	
18	System board			√	
19	Heat sink and fan module (for processor with TDP lower than 95W)			√	

Table 25. Parts listing (continued)

Index	Description	Tier 1 CRU	Tier 2 CRU	FRU	Consumable and Structural parts
20	Heat sink and fan module (for processor with 95W TDP)			√	
21	3V CMOS battery (CR2032)				√

Power cords

Several power cords are available, depending on the country and region where the server is installed.

To view the power cords that are available for the server:

1. Go to:

   http://dcsc.lenovo.com/#/
2. Click **Preconfigured Model** or **Configure to order**.
3. Enter the machine type and model for your server to display the configurator page.
4. Click **Power → Power Cables** to see all line cords.

Notes:

- For your safety, a power cord with a grounded attachment plug is provided to use with this product. To avoid electrical shock, always use the power cord and plug with a properly grounded outlet.
- Power cords for this product that are used in the United States and Canada are listed by Underwriter's Laboratories (UL) and certified by the Canadian Standards Association (CSA).
- For units intended to be operated at 115 volts: Use a UL-listed and CSA-certified cord set consisting of a minimum 18 AWG, Type SVT or SJT, three-conductor cord, a maximum of 15 feet in length and a parallel blade, grounding-type attachment plug rated 15 amperes, 125 volts.
- For units intended to be operated at 230 volts (U.S. use): Use a UL-listed and CSA-certified cord set consisting of a minimum 18 AWG, Type SVT or SJT, three-conductor cord, a maximum of 15 feet in length and a tandem blade, grounding-type attachment plug rated 15 amperes, 250 volts.
- For units intended to be operated at 230 volts (outside the U.S.): Use a cord set with a grounding-type attachment plug. The cord set should have the appropriate safety approvals for the country in which the equipment will be installed.
- Power cords for a specific country or region are usually available only in that country or region.

Chapter 3. Server hardware setup

To set up the server, install any options that have been purchased, cable the server, configure and update the firmware, and install the operating system.

Server setup checklist

Use the server setup checklist to ensure that you have performed all tasks that are required to set up your server.

The server setup procedure varies depending on the configuration of the server when it was delivered. In some cases, the server is fully configured and you just need to connect the server to the network and an ac power source, and then you can power on the server. In other cases, the server needs to have hardware options installed, requires hardware and firmware configuration, and requires an operating system to be installed.

The following steps describe the general procedure for setting up a server:

1. Unpack the server package. See “Server package contents” on page 2.
2. Set up the server hardware.
   a. Install any required hardware or server options. See the related topics in “Install server hardware options” on page 47.
   b. If necessary, install the server into a standard rack cabinet by using the tower-to-rack conversion kit. See the documentation that comes with the optional conversion kit.
   c. Connect the Ethernet cables and power cords to the server. See “Rear view” on page 14 to locate the connectors. See “Cable the server” on page 98 for cabling best practices.
   d. Power on the server. See “Power on the server” on page 99.
   e. Validate that the server hardware was set up successfully. See “Validate server setup” on page 99.
3. Configure the system.
   a. Update the firmware for the server, if necessary. See “Update the firmware” on page 101.
   b. Configure the firmware for the server. See “Configure the firmware” on page 101.

      The following information is available for RAID configuration:

      - https://lenovopress.com/lp0578-lenovo-raid-introduction
      - https://lenovopress.com/lp0579-lenovo-raid-management-tools-and-resources
   c. Install the operating system. See “Deploy the operating system” on page 106.
   d. Back up the server configuration. See “Back up the server configuration” on page 107.
   e. Install the applications and programs for which the server is intended to be used.

Installation Guidelines

Use the installation guidelines to install components in your server.

Before installing optional devices, read the following notices carefully:

Attention: Prevent exposure to static electricity, which might lead to system halt and loss of data, by keeping static-sensitive components in their static-protective packages until installation, and handling these devices with an electrostatic-discharge wrist strap or other grounding system.

© Copyright Lenovo 2022, 2025

- Read the safety information and guidelines to ensure that you work safely.
  - A complete list of safety information for all products is available at: https://pubs.lenovo.com/safety_documentation/
  - "Handling static-sensitive devices" on page 44
- Make sure the components you are installing are supported by the server. For a list of supported optional components for the server, see https://serverproven.lenovo.com/.
- When you install a new server, download and apply the latest firmware. This will help ensure that any known issues are addressed, and that your server is ready to work with optimal performance. Go to https://datacentersupport.lenovo.com/tw/en/products/servers/thinksystem/st50v2/downloads/driver-list/ to download firmware updates for your server.

  Important: Some cluster solutions require specific code levels or coordinated code updates. If the component is part of a cluster solution, verify that the latest level of code is supported for the cluster solution before you update the code.
- It is good practice to make sure that the server is working correctly before you install an optional component.
- Keep the working area clean, and place removed components on a flat and smooth surface that does not shake or tilt.
- Do not attempt to lift an object that might be too heavy for you. If you have to lift a heavy object, read the following precautions carefully:
  - Make sure that you can stand steadily without slipping.
  - Distribute the weight of the object equally between your feet.
  - Use a slow lifting force. Never move suddenly or twist when you lift a heavy object.
  - To avoid straining the muscles in your back, lift by standing or by pushing up with your leg muscles.
- Make sure that you have an adequate number of properly grounded electrical outlets for the server, monitor, and other devices.
- Back up all important data before you make changes related to the disk drives.
- Have a small flat-blade screwdriver, a small Phillips screwdriver, and a T8 torx screwdriver available.
- You do not have to turn off the server to remove or install hot-swap power supplies or hot-plug USB devices. However, you must turn off the server before you perform any steps that involve removing or installing adapter cables, and you must disconnect the power source from the server before you perform any steps that involve removing or installing a DIMM.
- Blue on a component indicates touch points, where you can grip to remove a component from or install it in the server, open or close a latch, and so on.
- Terra cotta on a component or an orange label on or near a component indicates that the component can be hot-swapped if the server and operating system support hot-swap capability, which means that you can remove or install the component while the server is still running. (Orange can also indicate touch points on hot-swap components.) See the instructions for removing or installing a specific hot-swap component for any additional procedures that you might have to perform before you remove or install the component.
- The Red strip on the drives, adjacent to the release latch, indicates that the drive can be hot-swapped if the server and operating system support hot-swap capability. This means that you can remove or install the drive while the server is still running.

  Note: See the system specific instructions for removing or installing a hot-swap drive for any additional procedures that you might need to perform before you remove or install the drive.
- After finishing working on the server, make sure you reinstall all safety shields, guards, labels, and ground wires.

Safety inspection checklist

Use the information in this section to identify potentially unsafe conditions with your server. As each machine was designed and built, required safety items were installed to protect users and service technicians from injury.

Note: This device is not intended for use in the direct field of view at visual display workplaces. To avoid incommoding reflections at visual display workplaces, this device must not be placed in the direct field of view.

Attention: This is a Class A product. In a domestic environment, this product may cause radio interference in which case the user may be required to take adequate measures.

CAUTION:
This equipment must be installed or serviced by trained personnel, as defined by the NEC, IEC 62368-1 & IEC 60950-1, the standard for Safety of Electronic Equipment within the Field of Audio/Video, Information Technology and Communication Technology. Lenovo assumes you are qualified in the servicing of equipment and trained in recognizing hazards energy levels in products.

Important: Electrical grounding of the server is required for operator safety and correct system function. Proper grounding of the electrical outlet can be verified by a certified electrician.

Use the following checklist to verify that there are no potentially unsafe conditions:

1. Make sure that the power is off and the power cord is disconnected.
2. Check the power cord.
   - Make sure that the third-wire ground connector is in good condition. Use a meter to measure third-wire ground continuity for 0.1 ohm or less between the external ground pin and the frame ground.
   - Make sure that the power cord is the correct type.

     To view the power cords that are available for the server:

     a. Go to:

     http://dcsc.lenovo.com/#/

     b. Click **Preconfigured Model** or **Configure to order**.

     c. Enter the machine type and model for your server to display the configurator page.

     d. Click **Power → Power Cables** to see all line cords.
   - Make sure that the insulation is not frayed or worn.
3. Check for any obvious non-Lenovo alterations. Use good judgment as to the safety of any non-Lenovo alterations.
4. Check inside the server for any obvious unsafe conditions, such as metal filings, contamination, water or other liquid, or signs of fire or smoke damage.
5. Check for worn, frayed, or pinched cables.
6. Make sure that the power-supply cover fasteners (screws or rivets) have not been removed or tampered with.

System reliability guidelines

The system reliability guidelines to ensure proper system cooling.

Make sure the following requirements are met:

- When the server comes with redundant power, a power supply must be installed in each power-supply bay.

- Adequate space around the server must be spared to allow server cooling system to work properly. Leave approximately 50 mm (2.0 in.) of open space around the front and rear of the server. Do not place any object in front of the fans.
- For proper cooling and airflow, refit the server cover before you turn the power on. Do not operate the server for more than 30 minutes with the server cover removed, for it might damage server components.
- Cabling instructions that come with optional components must be followed.
- A failed fan must be replaced within 48 hours since malfunction.
- A removed hot-swap drive must be replaced within two minutes after removal.
- A removed hot-swap power supply must be replaced within two minutes after removal.
- Every air baffle that comes with the server must be installed when the server starts (some servers might come with more than one air baffle). Operating the server with a missing air baffle might damage the processor.
- All processor sockets must contain either a socket cover or a processor with heat sink.
- When more than one processor is installed, fan population rules for each server must be strictly followed.

Handling static-sensitive devices

Follow this procedure to handle static-sensitive devices.

Attention: Prevent exposure to static electricity, which might lead to system halt and loss of data, by keeping static-sensitive components in their static-protective packages until installation, and handling these devices with an electrostatic-discharge wrist strap or other grounding system.

- Limit your movement to prevent building up static electricity around you.
- Take additional care when handling devices during cold weather, for heating would reduce indoor humidity and increase static electricity.
- Always use an electrostatic-discharge wrist strap or other grounding system.
- While the device is still in its static-protective package, touch it to an unpainted metal surface on the outside of the server for at least two seconds. This drains static electricity from the package and from your body.
- Remove the device from the package and install it directly into the server without putting it down. If it is necessary to put the device down, put it back into the static-protective package. Never place the device on the server or on any metal surface.
- When handling a device, carefully hold it by the edges or the frame.
- Do not touch solder joints, pins, or exposed circuitry.
- Keep the device from others' reach to prevent possible damages.

Memory module installation rules

Memory modules must be installed in a specific order based on the memory configuration of the server.

The following illustration shows the location of the memory module slots on the system board.

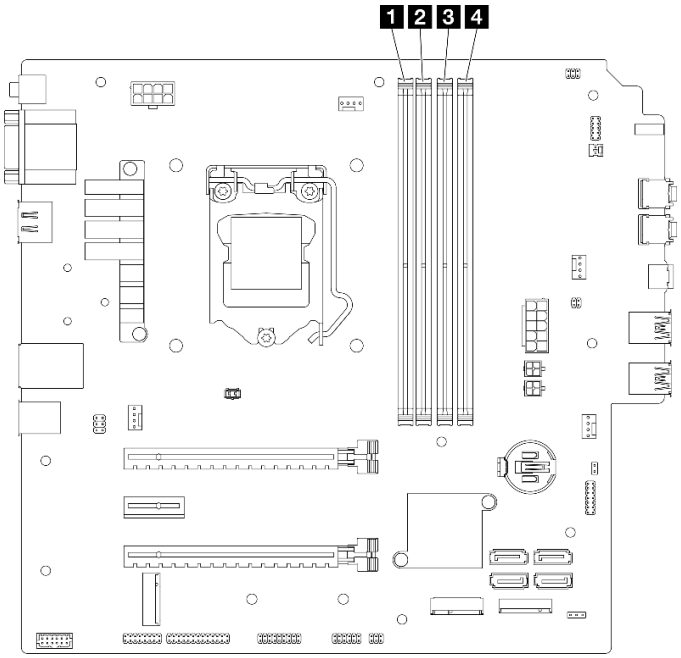

Figure 28. Memory module slots on the system board

Table 26. Memory module slots on the system board

1 Memory module slot 1	3 Memory module slot 3
2 Memory module slot 2	4 Memory module slot 4

Independent mode

This server supports independent mode only.

Independent mode provides high performance memory capability. You can populate all channels with no matching requirements. Individual channels can run at different DIMM timings, but all channels must run at the same interface frequency.

Make sure to adhere to the following rules:

- All memory modules installed should be identical in type and capacity.
- Do not mix memory modules with different voltages.
- Do not mix low-voltage and regular UDIMMs. (2R memory module only)

For a list of supported Memory module slot options, see: https://serverproven.lenovo.com/

Table 27. Memory module installation rules and order for Independent Mode

Total memory modules	Memory channel A		Memory channel B	
	Slot 1	Slot 2	Slot 3	Slot 4
1	V			
2*	V		V	
4†	V	V	V	V

* See the following for the maximum memory speed supported:
- Maximum memory speed supported by same memory capacity:
  - Xeon® E3–23XX: up to 3200 MT/s
  - Pentium Gold: up to 2666 MT/s

† See the following for the maximum memory speed supported:
- 8GB 1Rx8 DIMM
  - Xeon® E3–23XX: up to 3200 MT/s
  - Pentium Gold: up to 2666 MT/s
- 16GB 2Rx8
  - Xeon® E3–23XX: up to 2933 MT/s
  - Pentium Gold: up to 2400 MT/s

Drive bay locations

See the following illustration for the locations of drive bays and the types of drives supported.

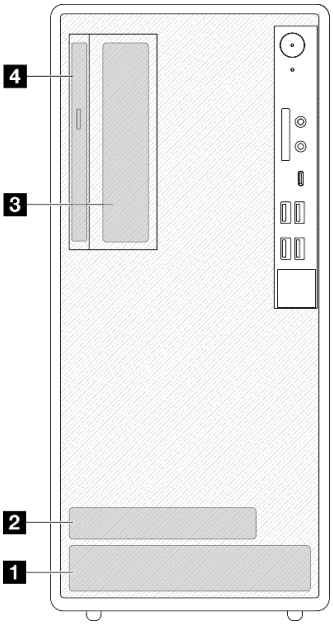

Figure 29. Drive bay locations

Drive bay	Types of drive supported
1 Bay 1	3.5-inch simple-swap drive
2 Bay 2	2.5-inch simple-swap drive
3 Bay 3	3.5-inch simple-swap drive
4 Optical drive bay	9mm slim SATA Optical disk drive

Install server hardware options

This section has instructions for performing initial installation of optional hardware. Each component installation procedure references any tasks that need to be performed to gain access to the component being replaced.

Installation procedures are presented in the optimum sequence to minimize work.

Remove the server from the rails

Follow this procedure to remove the server from the rails.

S002

CAUTION:
The power-control button on the device and the power switch on the power supply do not turn off the electrical current supplied to the device. The device also might have more than one power cord. To remove all electrical current from the device, ensure that all power cords are disconnected from the power source.

S014

CAUTION:
Hazardous voltage, current, and energy levels might be present. Only a qualified service technician is authorized to remove the covers where the label is attached.

S033

CAUTION:
Hazardous energy present. Voltages with hazardous energy might cause heating when shorted with metal, which might result in spattered metal, burns, or both.

About this task

Attention:

- Read “Safety inspection checklist” on page 43 and “Installation Guidelines” on page 41 to ensure that you work safely.
- Turn off the server and peripheral devices, and disconnect the power cords and all external cables, see “Power off the server” on page 99.

Watch the procedure

A video of this procedure is available at YouTube: https://www.youtube.com/playlist?list=PLYV5R7hVcs-AU3iY3F7lq3qfqr5caGblu.

Procedure

Note: Your system might looks slightly different from the illustration below.

Step 1. Remove the two M6 x 16 screws on the front of the rack cabinet.

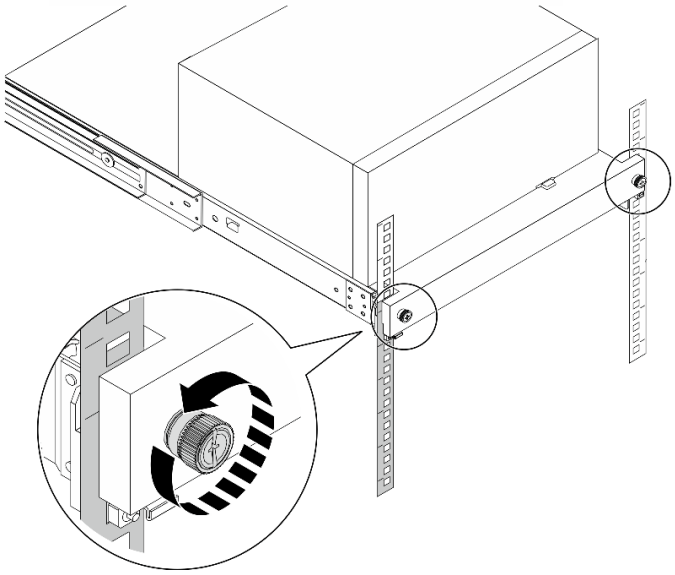

Figure 30. Removing the screws on the front of the rack cabinet

Step 2. Remove the server from the rails.

a. ❶ Slide and pull the rack server tray out of the rack cabinet.

b. ❷ Lift the server out of the tray.

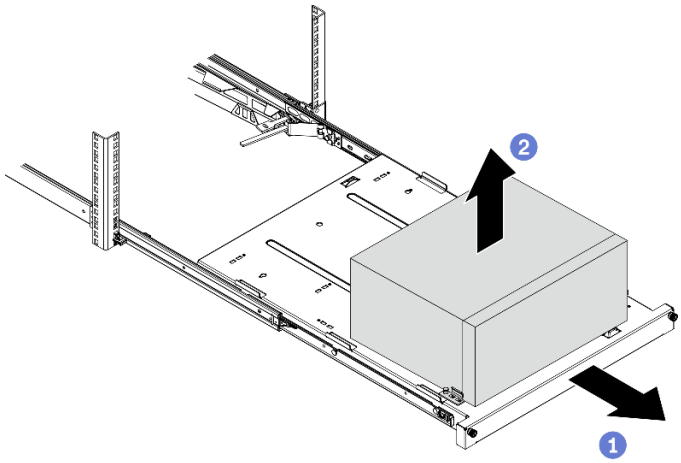

Figure 31. Removing the server from the rails

After you finish

1. Place the server on its side with the cover up.
2. To install the server to the rails, see “Install the server to the rails” on page 95.

Remove the server cover

Follow this procedure to remove the server cover.

S002

CAUTION:
The power-control button on the device and the power switch on the power supply do not turn off the electrical current supplied to the device. The device also might have more than one power cord. To remove all electrical current from the device, ensure that all power cords are disconnected from the power source.

S014

CAUTION:
Hazardous voltage, current, and energy levels might be present. Only a qualified service technician is authorized to remove the covers where the label is attached.

S033

CAUTION:
Hazardous energy present. Voltages with hazardous energy might cause heating when shorted with metal, which might result in spattered metal, burns, or both.

About this task

Attention:

- Read “Safety inspection checklist” on page 43 and “Installation Guidelines” on page 41 to ensure that you work safely.
- Turn off the server and peripheral devices, and disconnect the power cords and all external cables, see “Power off the server” on page 99.
- If the server is in a rack, remove it from the rack. See “Remove the server from the rails” on page 47.
- Remove any locking device that secures the server, such as a Kensington lock or a padlock.
- Place the server on its side with the cover up.

Watch the procedure

A video of this procedure is available at YouTube: https://www.youtube.com/playlist?list=PLYV5R7hVcs-AU3iY3F7lq3qfqr5caGblu.

Procedure

Step 1. Place the server on its side with the cover up.

Step 2. Remove the serve cover.

a. ❶ Use a screwdriver to remove the two screws that secure the server cover to the chassis.

b. ❷ Slide the server cover away from the front bezel, and lift it up from the chassis. Reserve the screws to be used for reinstalling the server cover.

Attention:

- The heat sinks and processor could be very hot. To avoid burning yourself, wait for a few minutes after turning off the server before you remove the server cover.
- For proper cooling, always install the server cover before powering on the server. Operating the server without the cover properly installed might result in server component damage.

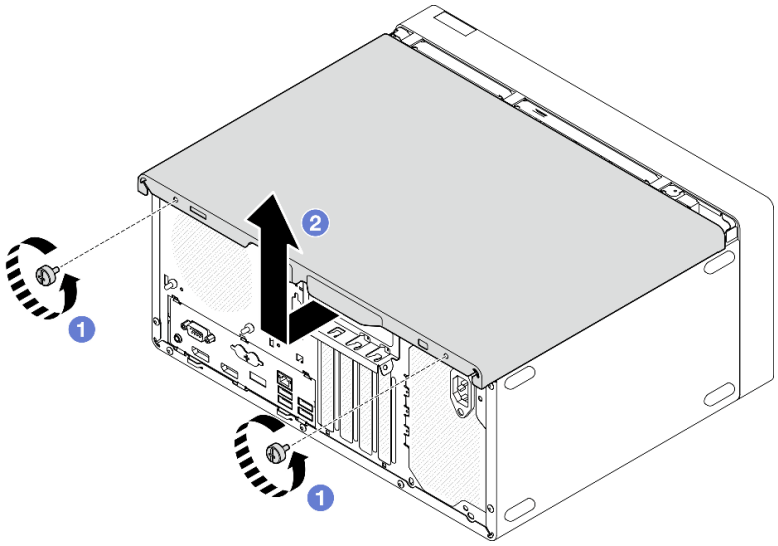

Figure 32. Removing the serve cover

Step 3. **(Optional)** Remove the cage bar. Remove the optical drive cage first, see “Remove the optical drive cage” on page 75; then, proceed to the following procedures.

a. ❶ Push the latch on the cage bar until the cage bar is disengaged from the chassis.

b. ❷ Rotate the cage bar and remove it from the chassis.

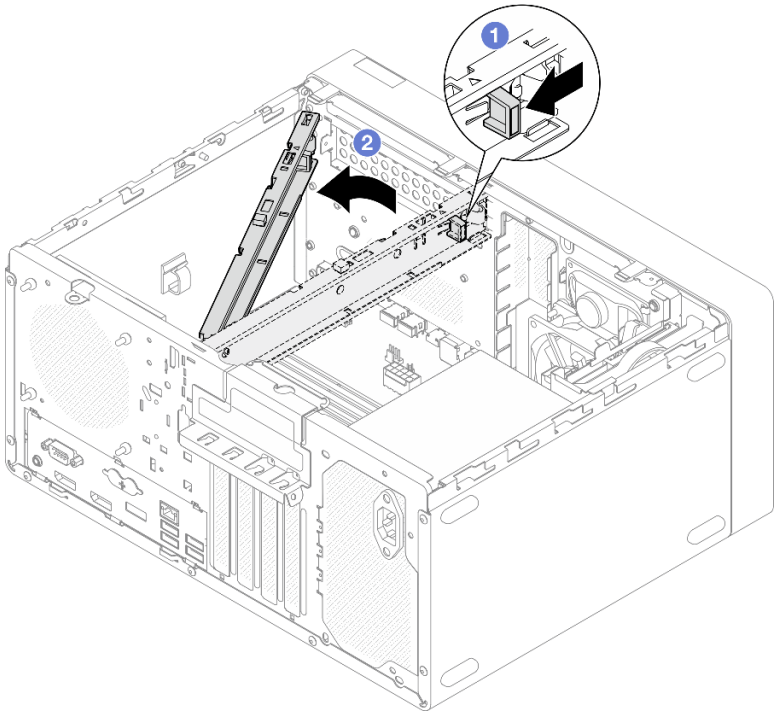

Figure 33. Removing the cage bar

Remove the front bezel

Follow this procedure to remove the front bezel.

S002

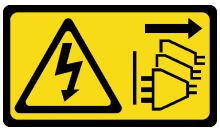

CAUTION:
The power-control button on the device and the power switch on the power supply do not turn off the electrical current supplied to the device. The device also might have more than one power cord. To remove all electrical current from the device, ensure that all power cords are disconnected from the power source.

About this task

Attention:

- Read “Safety inspection checklist” on page 43 and “Installation Guidelines” on page 41 to ensure that you work safely.
- Turn off the server and peripheral devices, and disconnect the power cords and all external cables, see “Power off the server” on page 99.
- If the server is in a rack, remove it from the rack. See “Remove the server from the rails” on page 47.
- Remove any locking device that secures the server, such as a Kensington lock or a padlock.
- Place the server on its side with the cover up.

Watch the procedure

A video of this procedure is available at YouTube: https://www.youtube.com/playlist?list=PLYV5R7hVcs-AU3iY3F7lq3qfqr5caGblu.

Procedure

Step 1. Make preparation for this task.

a. Remove the server cover, see “Remove the server cover” on page 49.

Note: The heat sink and processor could be very hot. To avoid burning yourself, wait for a few minutes after turning off the server before you remove the server cover.

Step 2. Remove the front bezel.

a. ❶ Release the three plastic tabs on the front bezel.

b. ❷ Rotate the front bezel to remove it from the chassis.

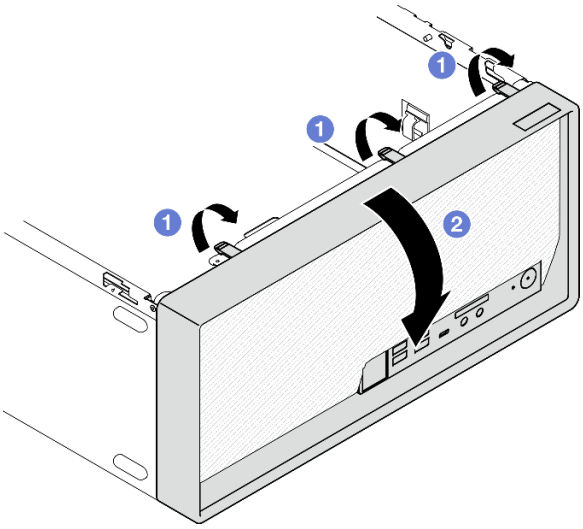

Figure 34. Removing the front bezel

Remove the CMOS battery (CR2032)

S002

CAUTION:
The power-control button on the device and the power switch on the power supply do not turn off the electrical current supplied to the device. The device also might have more than one power cord. To remove all electrical current from the device, ensure that all power cords are disconnected from the power source.

S004

CAUTION:
When replacing the lithium battery, use only Lenovo specified part number or an equivalent type battery recommended by the manufacturer. If your system has a module containing a lithium battery, replace it only with the same module type made by the same manufacturer. The battery contains lithium and can explode if not properly used, handled, or disposed of.

Do not:

- **Throw or immerse into water**
- **Heat to more than 100°C (212°F)**
- **Repair or disassemble**

Dispose of the battery as required by local ordinances or regulations.

S005

CAUTION:
The battery is a lithium ion battery. To avoid possible explosion, do not burn the battery. Exchange it only with the approved part. Recycle or discard the battery as instructed by local regulations.

About this task

Attention:

- Read “Safety inspection checklist” on page 43 and “Installation Guidelines” on page 41 to ensure that you work safely.
- Turn off the server and peripheral devices, and disconnect the power cords and all external cables, see “Power off the server” on page 99.
- If the server is in a rack, remove it from the rack. See “Remove the server from the rails” on page 47.
- Remove any locking device that secures the server, such as a Kensington lock or a padlock.
- Place the server on its side with the cover up.

Watch the procedure

A video of this procedure is available at YouTube: https://www.youtube.com/playlist?list=PLYV5R7hVcs-AU3iY3F7lq3qfqr5caGblu.

Procedure

Step 1. Make preparation for the task.

a. Remove the server cover, see “Remove the server cover” on page 49.

Note: The heat sink and processor could be very hot. To avoid burning yourself, wait for a few minutes after turning off the server before you remove the server cover.

Step 2. Locate the CMOS battery on the system board. See “System board components” on page 18.

Step 3. Gently press on the nub on the side of the CMOS battery as illustrated; then, pivot the battery away from the seat to remove it.

Attention: Avoid excessive force on the CMOS battery, as it might damage the socket on the system board and result in system board replacement.

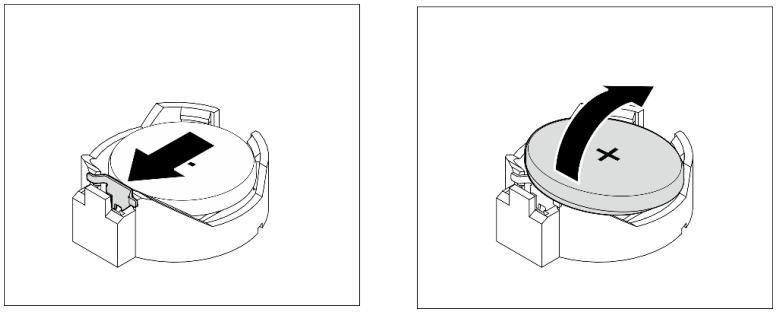

Figure 35. Removing the CMOS battery (CR2032)

After you finish

1. Install a new CMOS battery. See “Install the CMOS battery (CR2032)” on page 89.

   Note: Make sure to install the CMOS battery before powering on the server. Otherwise, it might cause system abnormality.

2. Dispose the CMOS battery as required by local ordinances or regulations.

Install a simple-swap drive and drive cage (bay 1-2)

Follow this procedure to install a simple-swap drive and drive cage into bay 1 or bay 2.

Remove a simple-swap drive (bay 1-2)

Follow this procedure to remove a simple-swap drive from bay 1 or bay 2.

S002

CAUTION:
The power-control button on the device and the power switch on the power supply do not turn off the electrical current supplied to the device. The device also might have more than one power cord. To remove all electrical current from the device, ensure that all power cords are disconnected from the power source.

About this task

Attention:

- Read “Safety inspection checklist” on page 43 and “Installation Guidelines” on page 41 to ensure that you work safely.
- Turn off the server and peripheral devices, and disconnect the power cords and all external cables, see “Power off the server” on page 99.
- If the server is in a rack, remove it from the rack. See “Remove the server from the rails” on page 47.
- Remove any locking device that secures the server, such as a Kensington lock or a padlock.
- Place the server on its side with the cover up.

Watch the procedure

A video of this procedure is available at YouTube: https://www.youtube.com/playlist?list=PLYV5R7hVcs-AU3iY3F7lq3qfqr5caGblu.

Procedure

Step 1. Make preparation for this task.

a. Remove the server cover, see “Remove the server cover” on page 49.

Attention: The heat sink and processor could be very hot. To avoid burning yourself, wait for a few minutes after turning off the server before you remove the server cover.

Step 2. Disconnect every cable from the drive assembly.

Step 3. Remove the simple-swap drive assembly.

Remove the simple-swap drive assembly from drive bay 1

Grasp the retainer handle, and lift the drive assembly out of the drive bay.

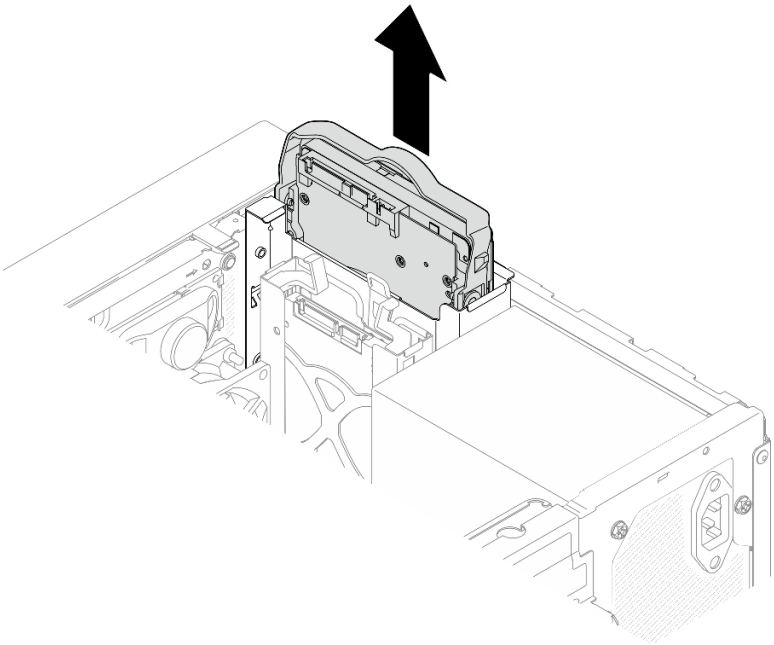

Figure 36. Removing drive assembly from drive bay 1

Remove the simple-swap drive assembly from drive bay 2

a. ❶ Pinch the retainer handles.

b. ❷ Lift the drive assembly out from the drive bay.

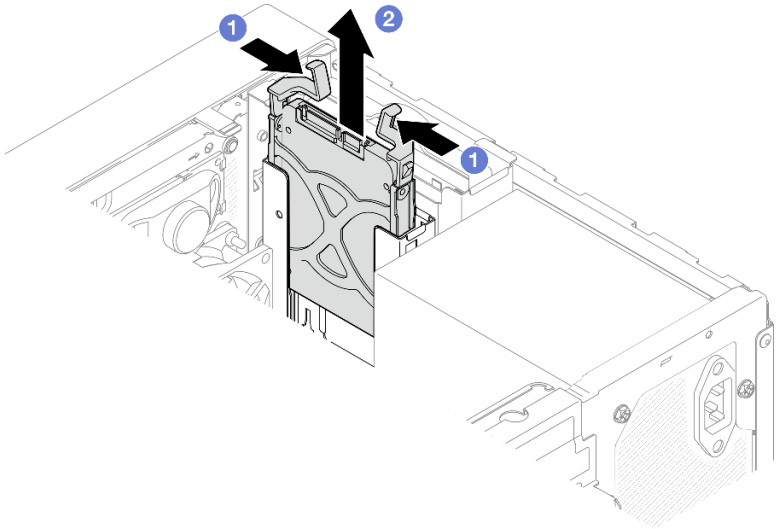

Figure 37. Removing drive assembly from drive bay 2

Step 4. If necessary, remove the drive from the retainer. Tear both sides of the retainer apart, and remove the drive.

Remove a 3.5-inch drive from the retainer

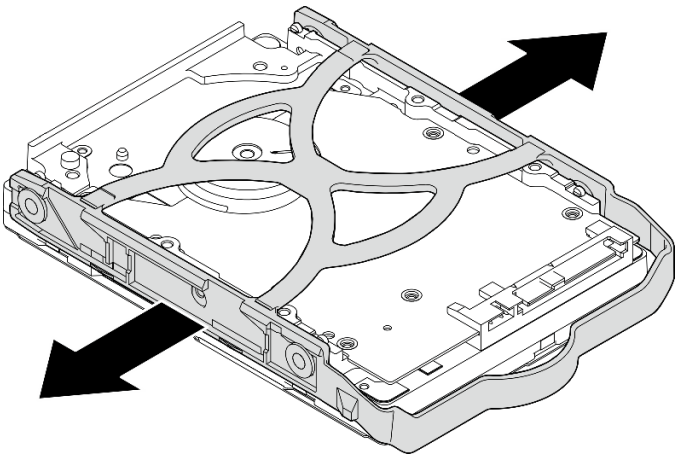

Figure 38. Removing a 3.5-inch drive from the retainer

Note: Depending on the configuration, the 3.5-inch drive may be the model in the illustration below.

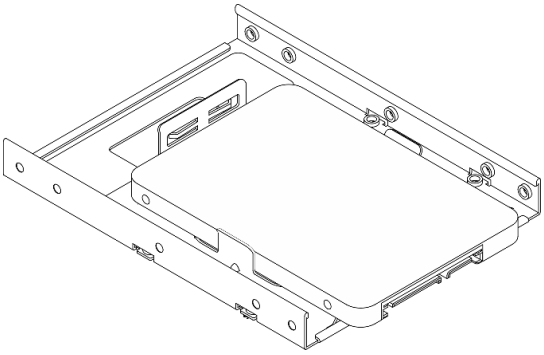

Remove a 2.5-inch drive from the retainer

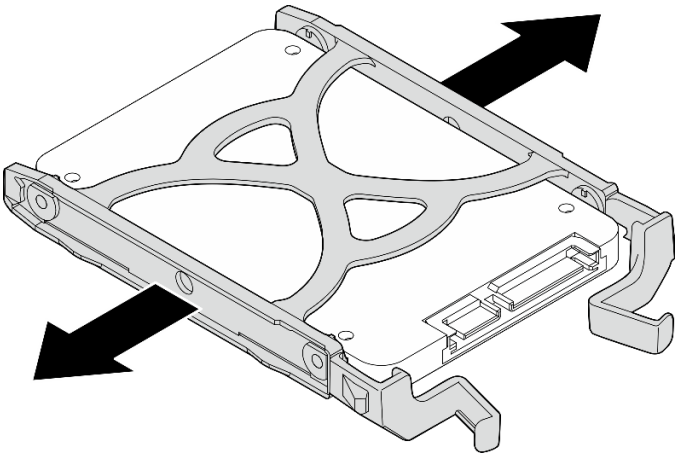

Figure 39. Removing a 2.5-inch drive from the retainer

Install a simple-swap drive (bay 1-2)

Follow this procedure to install a simple-swap drive to bay 1 or bay 2.

S002

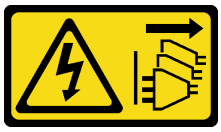

CAUTION:
The power-control button on the device and the power switch on the power supply do not turn off the electrical current supplied to the device. The device also might have more than one power cord. To remove all electrical current from the device, ensure that all power cords are disconnected from the power source.

About this task

Attention:

- Read “Safety inspection checklist” on page 43 and “Installation Guidelines” on page 41 to ensure that you work safely.
- Touch the static-protective package that contains the component to any unpainted metal surface on the server; then, remove it from the package and place it on a static-protective surface.
- Make sure the type of drives to be installed is supported. Following are the types supported:
  - 3.5-inch simple-swap hard-disk drive or solid-state drive in drive bay 1 and drive bay 3
  - 2.5-inch simple-swap solid-state drive in drive bay 2

  For a complete list of supported optional devices for the server, see https://serverproven.lenovo.com/.
- If there are more than one drives to be installed, determine installation order based on the following rules:
  - Start with solid-state drives, and proceed with hard-disk drives.
  - When installing one 3.5-inch solid-state drive and one 3.5-inch hard-disk drive, install the solid-state drive in bay 1 and the hard-disk drive in bay 3.
  - Start with the drive with the lowest capacity.
  - Start with bay 1, proceed to bay 2, and bay 3.

  Note: Drives of different types and different capacities are allowed to be installed in one server, but not in the same RAID array. The drives in a single RAID array must be the same type and the same capacity. See https://sysmgt.lenovofiles.com/help/topic/LXPML/RAID_setup.html for more details.

Watch the procedure

A video of this procedure is available at YouTube: https://www.youtube.com/playlist?list=PLYV5R7hVcs-AU3iY3F7lq3qfqr5caGbIu.

Procedure

Note: To prevent from damaging the drive with static discharge, do not touch the circuit board on the bottom of the drive.

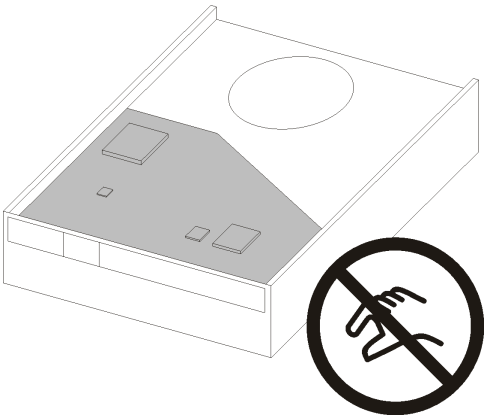

Figure 40. Circuit board on the drive

Step 1. Install a 3.5-inch or 2.5-inch drive to the retainer

a. ❶ Slightly tear both sides of the retainer apart.

b. ❷ Align the four holes on the drive with the corresponding pins on the retainer; then, fit the drive into the retainer.

Note: The drive connectors should face the retainer handles.

Install a 3.5-inch drive into the retainer

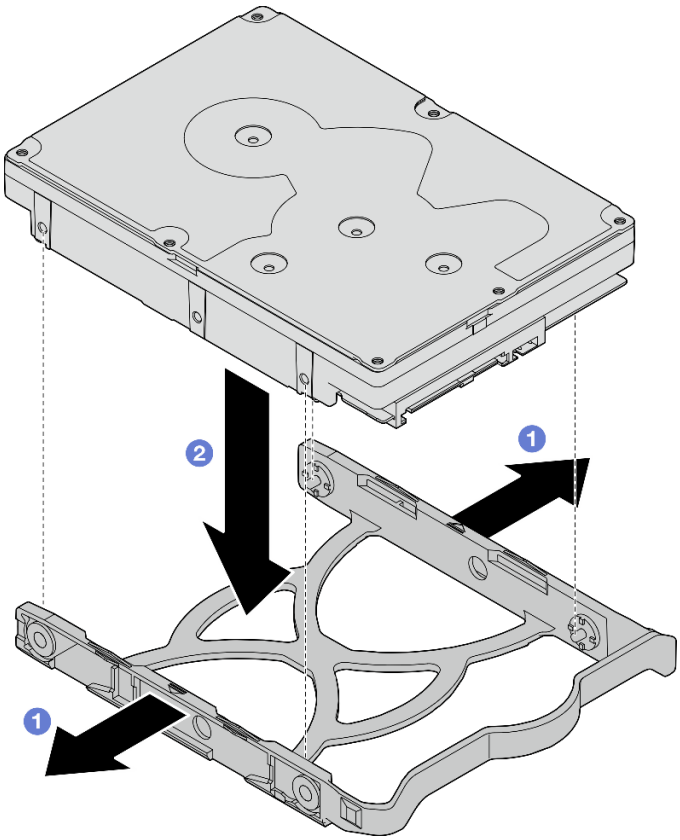

Figure 41. Installing a 3.5-inch drive into the retainer

Note: Depending on the configuration, the 3.5-inch drive may be the model in the illustration below.

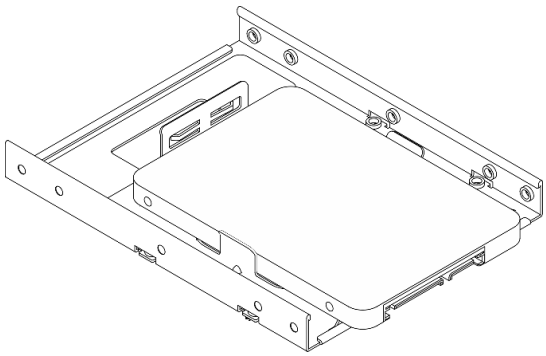

Install a 2.5-inch drive into the retainer

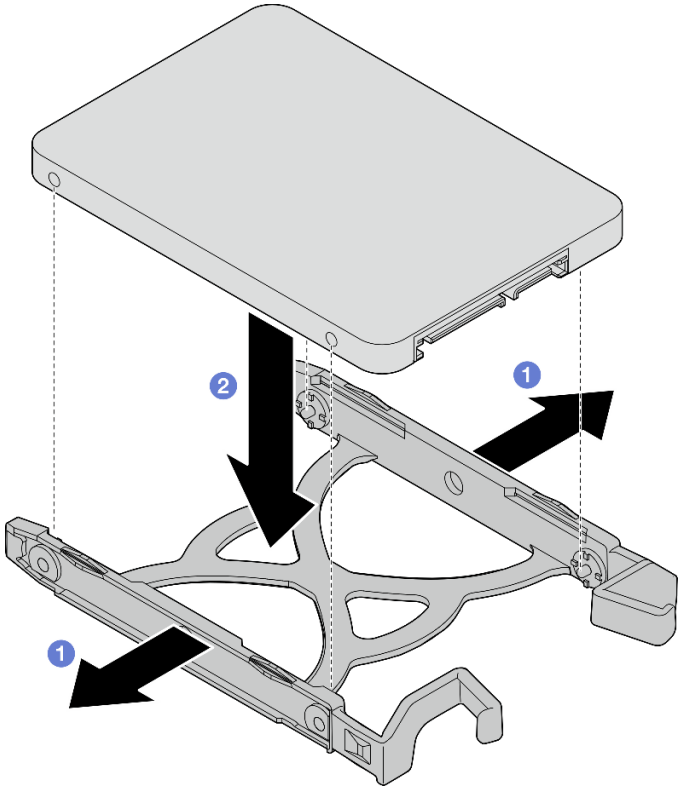

Figure 42. Installing a 2.5-inch drive into the retainer

Step 2. Face the retainer handles upward and push the drive assembly into the drive bay. Press the drive assembly firmly to ensure it is seated correctly.

Install 3.5-inch drive assembly into drive bay 1

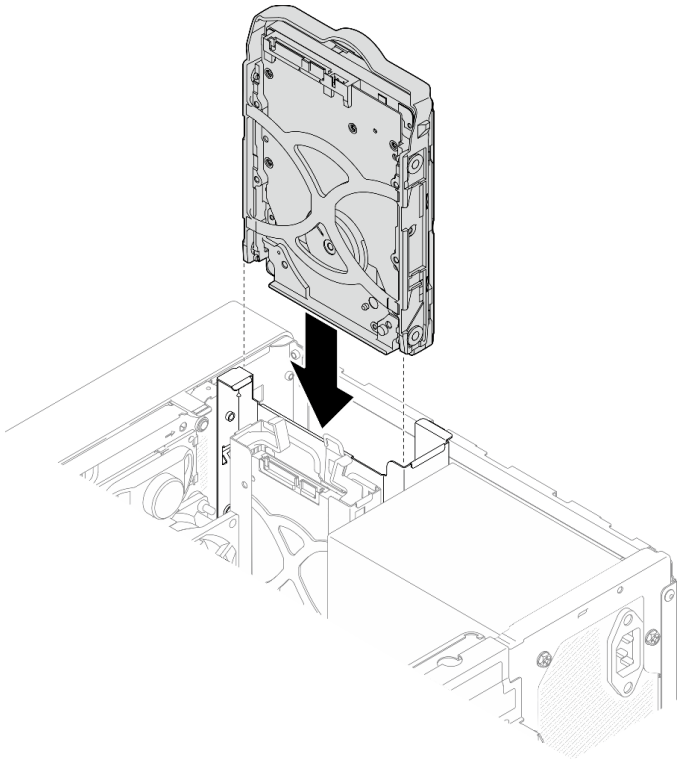

Figure 43. Install 3.5-inch drive assembly into drive bay 1

Install 2.5-inch drive assembly into drive bay 2

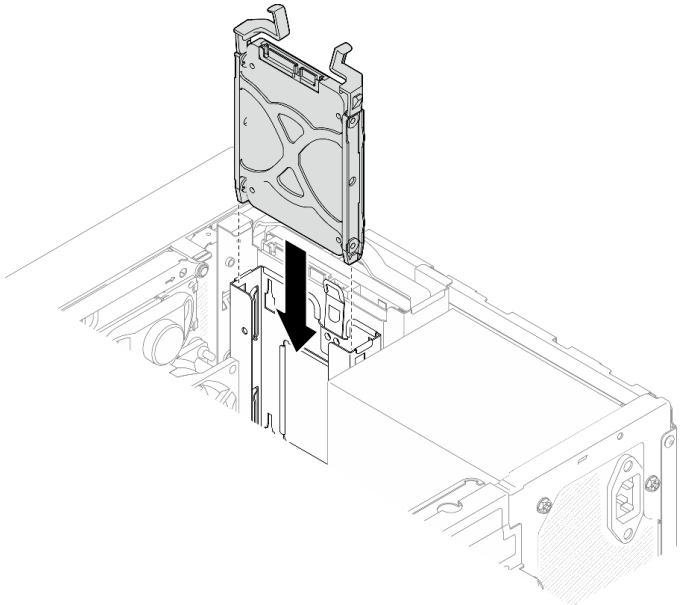

Figure 44. Install 2.5-inch drive assembly into drive bay 2

Step 3. Connect the signal and power cable to the system board, see “Internal cable routing” on page 19.

After you finish

1. Check the drive activity LED on the front panel to verify if the drives are operating correctly.

Table 28. Drive activity LED behavior

Status	Color	Description
Solid on	White	The drives are active.
Off	None	The drives are not active.

2. Use the Lenovo XClarity Provisioning Manager Lite to configure the RAID if necessary. For more information, see https://sysmgt.lenovofiles.com/help/topic/LXPML/RAID_setup.html.

Install the drive cage (bay 1-2)

Follow this procedure to install the bay 1 drive cage and bay 2 drive cage.

S002

CAUTION:
The power-control button on the device and the power switch on the power supply do not turn off the electrical current supplied to the device. The device also might have more than one power cord. To remove all electrical current from the device, ensure that all power cords are disconnected from the power source.

About this task

Attention:

- Read “Safety inspection checklist” on page 43 and “Installation Guidelines” on page 41 to ensure that you work safely.

Watch the procedure

A video of this procedure is available at YouTube: https://www.youtube.com/playlist?list=PLYV5R7hVcs-AU3iY3F7Iq3qfqr5caGbIu.

Procedure

Note: Install the bay 1 drive cage first; then, proceed to install the bay 2 drive cage.

Step 1. Install the bay 1 drive cage.

a. ❶ Align the bay 1 drive cage to the slots on chassis; then, install it into the chassis. Make sure the drive cage is seated correctly in the chassis.

b. ❷ From the inside of the chassis, fasten the screw that secures the bay 1 drive cage to the chassis.

c. ❸ From the outside of the chassis, fasten the screw that secures the bay 1 drive cage to the chassis.

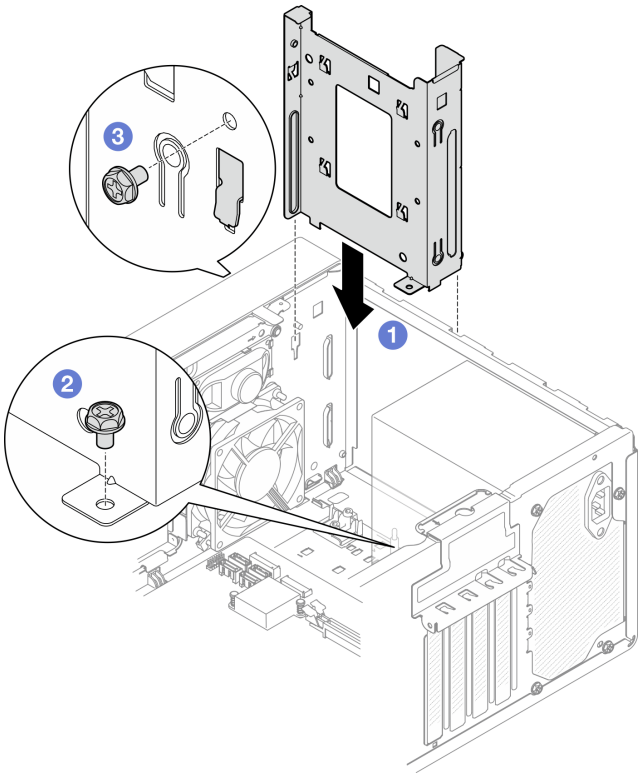

Figure 45. Installing drive cage to bay 1

Step 2. Install the bay 2 drive cage.

Align the four hooks on both drive cages, and attache bay 2 drive cage to bay 1 drive cage; then, slide the bay 2 drive cage downward until the four hooks on both drive cages are fully engaged. Make sure the latch on the bay 2 drive cage is also engaged with the hook on bay 1 drive cage.

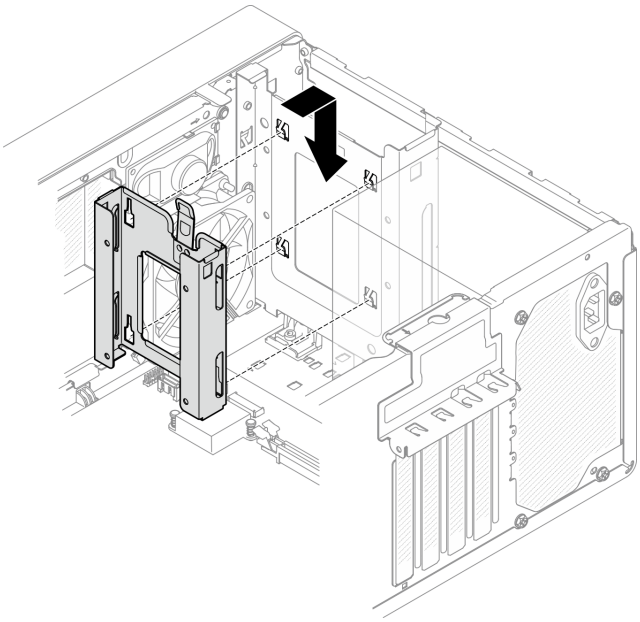

Figure 46. Installing the drive bay 2 cage

Install a simple-swap drive and the drive cage (bay 3)

Follow this procedure to install a simple-swap drive and the drive cage into bay 3.

Remove a simple-swap drive (bay 3)

Follow this procedure to remove a simple-swap drive from bay 3.

S002

CAUTION:
The power-control button on the device and the power switch on the power supply do not turn off the electrical current supplied to the device. The device also might have more than one power cord. To remove all electrical current from the device, ensure that all power cords are disconnected from the power source.

About this task

Attention:

- Read “Safety inspection checklist” on page 43 and “Installation Guidelines” on page 41 to ensure that you work safely.
- Turn off the server and peripheral devices, and disconnect the power cords and all external cables, see “Power off the server” on page 99.
- If the server is in a rack, remove it from the rack. See “Remove the server from the rails” on page 47.
- Remove any locking device that secures the server, such as a Kensington lock or a padlock.
- Place the server on its side with the cover up.

Watch the procedure

A video of this procedure is available at YouTube: https://www.youtube.com/playlist?list=PLYV5R7hVcs-AU3iY3F7lq3qfqr5caGbIu.

Procedure

Step 1. Make preparation for this task.

a. Remove the server cover, see “Remove the server cover” on page 49.

Note: The heat sink and processor could be very hot. To avoid burning yourself, wait for a few minutes after turning off the server before you remove the server cover.

b. If applicable, remove the optical drive, see “Remove an optical drive” on page 71.

c. Remove the optical drive cage from the chassis, see “Remove the optical drive cage” on page 75.

Step 2. Disconnect the signal and power cable from the drive assembly.

Step 3. Remove the 3.5-inch drive.

a. ❶ Slide the drive retainer out from the drive cage.

b. ❷ Tear both sides of the retainer apart and remove the drive from the retainer.

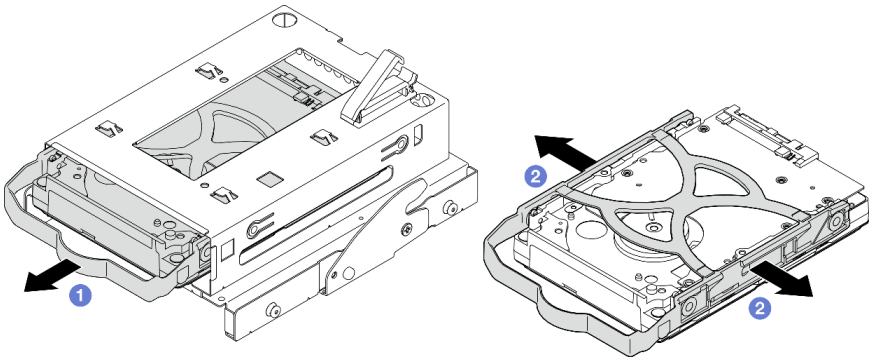

Figure 47. Removing the 3.5-inch drive

Note: Depending on the configuration, the 3.5-inch drive may be the model in the illustration below.

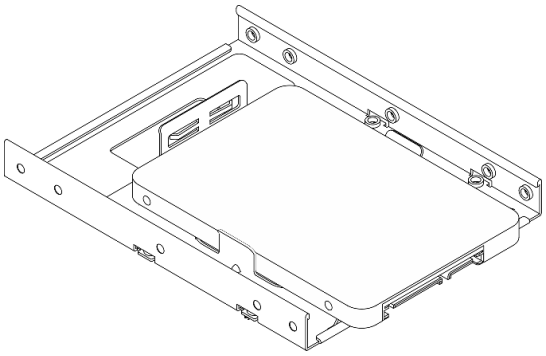

Install a simple-swap drive (bay 3)

Follow this procedure to install a simple-swap drive to bay 3.

S002

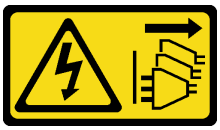

CAUTION:
The power-control button on the device and the power switch on the power supply do not turn off the electrical current supplied to the device. The device also might have more than one power cord. To remove all electrical current from the device, ensure that all power cords are disconnected from the power source.

About this task

Attention:

- Read “Safety inspection checklist” on page 43 and “Installation Guidelines” on page 41 to ensure that you work safely.

- Touch the static-protective package that contains the component to any unpainted metal surface on the server; then, remove it from the package and place it on a static-protective surface.
- Make sure the type of drives to be installed is supported. Following are the types supported:
  - 3.5-inch simple-swap hard-disk drive or solid-state drive in drive bay 1 and drive bay 3
  - 2.5-inch simple-swap solid-state drive in drive bay 2

  For a complete list of supported optional devices for the server, see https://serverproven.lenovo.com/.
- If there are more than one drives to be installed, determine installation order based on the following rules:
  - Start with solid-state drives, and proceed with hard-disk drives.
  - When installing one 3.5-inch solid-state drive and one 3.5-inch hard-disk drive, install the solid-state drive in bay 1 and the hard-disk drive in bay 3.
  - Start with the drive with the lowest capacity.
  - Start with bay 1, proceed to bay 2, and bay 3.

  Note: Drives of different types and different capacities are allowed to be installed in one server, but not in the same RAID array. The drives in a single RAID array must be the same type and the same capacity. See https://sysmgt.lenovofiles.com/help/topic/LXPML/RAID_setup.html for more details.

Watch the procedure

A video of this procedure is available at YouTube: https://www.youtube.com/playlist?list=PLYV5R7hVcs-AU3iY3F7lq3qfqr5caGbIu.

Procedure

Note: To prevent from damaging the drive with static discharge, do not touch the circuit board on the bottom of the drive.

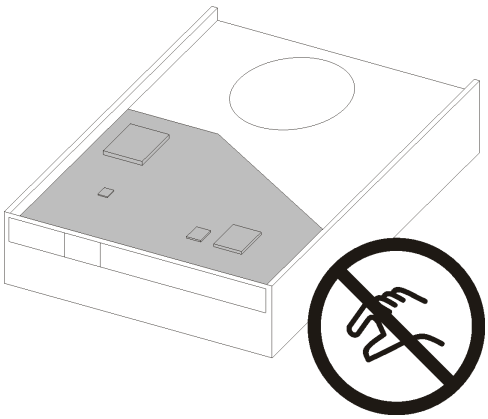

Figure 48. Circuit board on the drive

Step 1. Install the 3.5-inch drive to the drive cage.

a. ❶ Slightly tear both sides of the retainer apart.

Attention: Position the drive connectors on the opposite side of the retainer handles.

b. ❷ Align the four holes on the drive with the corresponding pins on the retainer; then, fit the drive into the retainer.

c. ❸ Slide the drive into the drive cage.

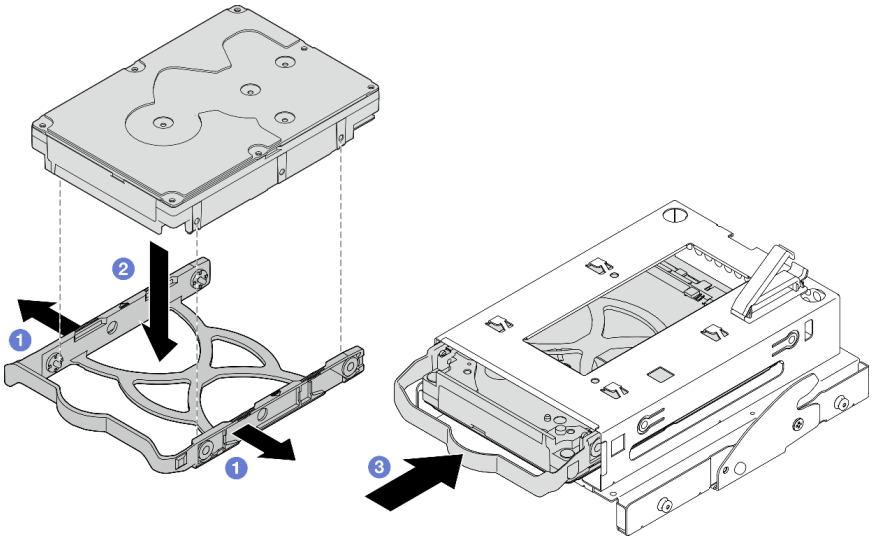

Figure 49. Installing a 3.5-inch drive to the drive cage

Attention: If you are installing a 3.5-inch drive as the model in the illustration below:

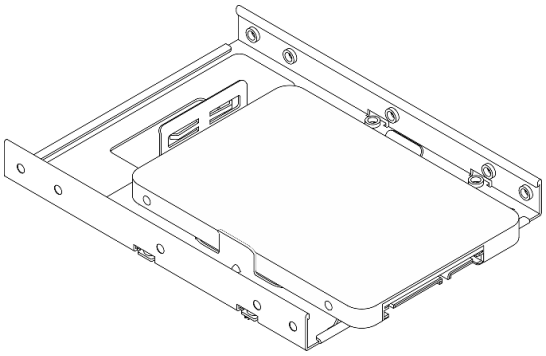

Make sure the screw holes that are nearest to the drive connector are **outside** of the drive retainer.

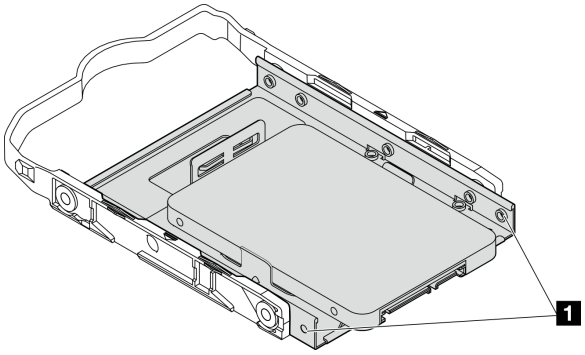

Figure 50. Drive screw hole placement on retainer

1 Screw holes nearest to the drive connector

After you finish

1. Install the optical drive cage, see “Install the optical drive cage” on page 77.
2. Connect the signal and power cable to the drive assembly, see “Internal cable routing” on page 19.
3. Check the drive activity LED on the front panel to verify if the drives are operating correctly.

   Table 29. Drive activity LED behavior

Status	Color	Description
Solid on	White	The drives are active.
Off	None	The drives are not active.

4. Use the Lenovo XClarity Provisioning Manager Lite to configure the RAID if necessary. For more information, see https://sysmgt.lenovofiles.com/help/topic/LXPML/RAID_setup.html.

Install the drive cage (bay 3)

Follow this procedure to install the drive cage to bay 3.

S002

CAUTION:
The power-control button on the device and the power switch on the power supply do not turn off the electrical current supplied to the device. The device also might have more than one power cord. To remove all electrical current from the device, ensure that all power cords are disconnected from the power source.

About this task

Attention:

- Read “Safety inspection checklist” on page 43 and “Installation Guidelines” on page 41 to ensure that you work safely.
- Touch the static-protective package that contains the component to any unpainted metal surface on the server; then, remove it from the package and place it on a static-protective surface.

Watch the procedure

A video of this procedure is available at YouTube: https://www.youtube.com/playlist?list=PLYV5R7hVcs-AU3iY3F7Iq3qfqr5caGbIu.

Procedure

Step 1. **(Optional)** Install the EMI shielding included in the component packaging to the chassis.

Note: Installing the EMI shielding is required when the original shielding slot on the chassis is vacant.

a. ❶ Insert the tabs on the left end of the EMI shielding into the shield slot on the chassis.

b. ❷ Push the EMI shielding into the chassis until it snaps into place.

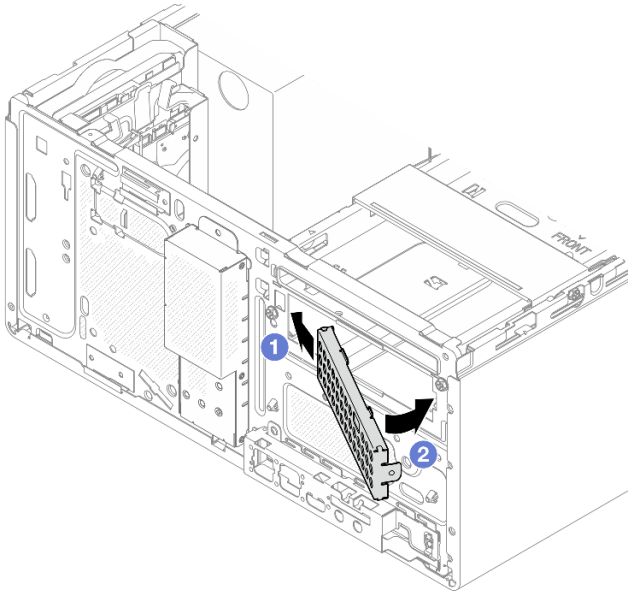

Figure 51. Installing the EMI shielding

Step 2. Make sure there is no optical drive installed on the optical drive cage. Then, istall the 3.5-inch drive cage to the optical drive cage.

a. ❶ Align the four hooks on the optical drive cage with the corresponding hooks on the 3.5-inch drive cage; then, lower the optical drive cage onto the 3.5-inch drive cage, and slide the optical drive forward until it secures into place.

Note: Make sure the four hooks on both drive cages are fully engaged.

b. ❷ Fasten the captive screw to secure the two drive cages together.

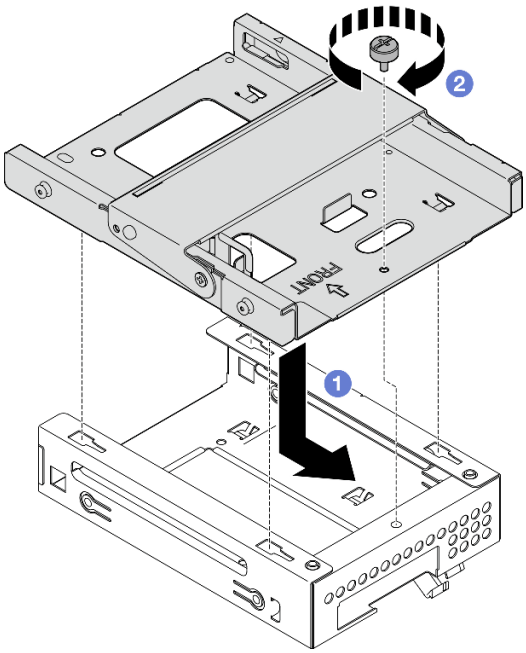

Figure 52. Installing the 3.5-inch drive cage to the optical drive cage

After you finish

1. Reinstall the optical drive cage, see “Install the optical drive cage” on page 77.

Install an optical drive and the drive cage

Follow this procedure to install an optical drive and the drive cage.

Remove an optical drive

Follow this procedure to remove an optical drive.

S002

CAUTION:
The power-control button on the device and the power switch on the power supply do not turn off the electrical current supplied to the device. The device also might have more than one power cord. To remove all electrical current from the device, ensure that all power cords are disconnected from the power source.

About this task

Attention:

- Read “Safety inspection checklist” on page 43 and “Installation Guidelines” on page 41 to ensure that you work safely.
- Turn off the server and peripheral devices, and disconnect the power cords and all external cables, see “Power off the server” on page 99.
- If the server is in a rack, remove it from the rack. See “Remove the server from the rails” on page 47.
- Remove any locking device that secures the server, such as a Kensington lock or a padlock.
- Place the server on its side with the cover up.

Watch the procedure

A video of this procedure is available at YouTube: https://www.youtube.com/playlist?list=PLYV5R7hVcs-AU3iY3F7lq3qfqr5caGbIu.

Procedure

Step 1. Make preparation for this task.

a. Remove the server cover, see “Remove the server cover” on page 49.

Note: The heat sink and processor could be very hot. To avoid burning yourself, wait for a few minutes after turning off the server before you remove the server cover.

Step 2. Remove the optical drive from the optical drive cage.

a. ❶ Press the latch on the optical drive to release it from the optical drive cage.

b. ❷ Slide out the optical drive from the chassis.

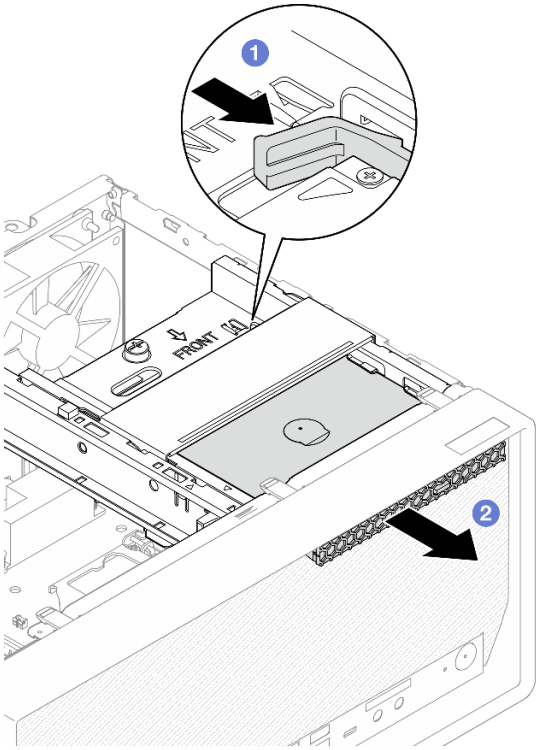

Figure 53. Removing the optical drive

Step 3. **(Optional)** Remove the optical drive retainer.

a. ❶ Pull out the retainer to disengage it from the optical drive.

b. ❷ Slide the retainer downward, and remove it from the optical drive.

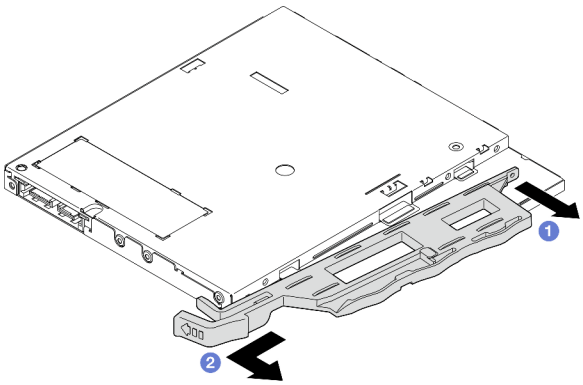

Figure 54. Removing optical drive retainer

Step 4. **(Optional)** Pull the optical drive bezel away to remove it from the optical drive.

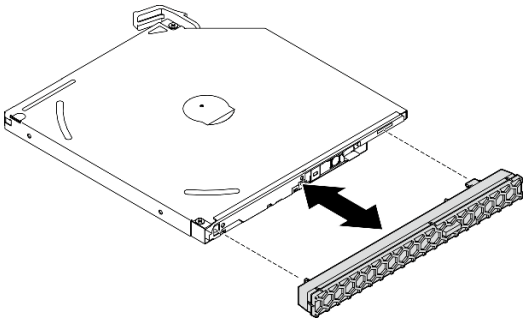

Figure 55. Removing the optical drive bezel

Install an optical drive

Follow this procedure to install an optical drive.

S002

CAUTION:
The power-control button on the device and the power switch on the power supply do not turn off the electrical current supplied to the device. The device also might have more than one power cord. To remove all electrical current from the device, ensure that all power cords are disconnected from the power source.

S006

CAUTION:
When laser products (such as CD-ROMs, DVD drives, fiber optic devices, or transmitters) are installed, note the following:

- **Do not remove the covers. Removing the covers of the laser product could result in exposure to hazardous laser radiation. There are no serviceable parts inside the device.**
- **Use of controls or adjustments or performance of procedures other than those specified herein might result in hazardous radiation exposure.**

About this task

Attention:

- Read “Safety inspection checklist” on page 43 and “Installation Guidelines” on page 41 to ensure that you work safely.
- Touch the static-protective package that contains the component to any unpainted metal surface on the server; then, remove it from the package and place it on a static-protective surface.

Watch the procedure

A video of this procedure is available at YouTube: https://www.youtube.com/playlist?list=PLYV5R7hVcs-AU3iY3F7lq3qfqr5caGblu.

Procedure

Step 1. If the optical drive bay shield is installed on the front bezel, remove it from the front bezel. To remove the front bezel, see “Remove the front bezel” on page 51.

a. ❶ Press the release tab on top of the drive bay shield.

b. ❶ Rotate the drive bay shield and remove it from the front bezel.

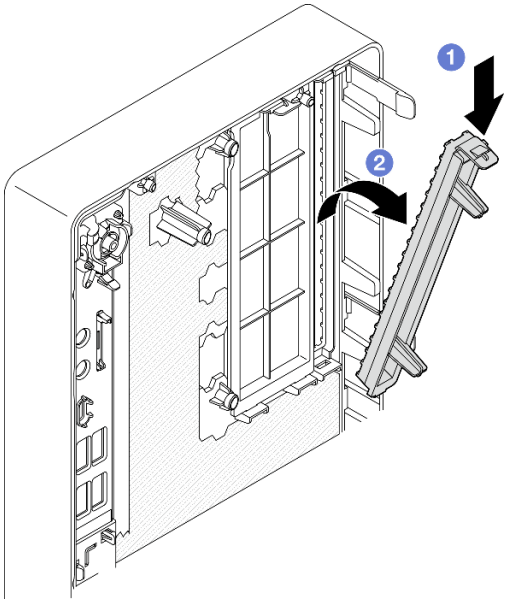

Figure 56. Removing the optical drive bay shield

Step 2. **(Optional)** Install the optical drive retainer.

a. ❶ Align the pin on the bottom of the retainer and the corresponding slot on the optical drive, then insert the pin into the slot.

b. ❷ Insert the rest two pins on retainer to the corresponding slots on the optical drive.

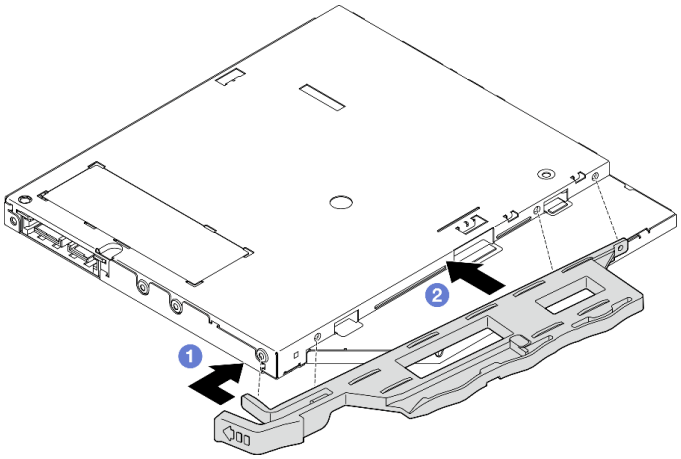

Figure 57. Installing the retainer to the optical drive

Step 3. **(Optional)** Align the optical drive bezel with the slots on the optical drive; then, insert the bezel into the optical drive.

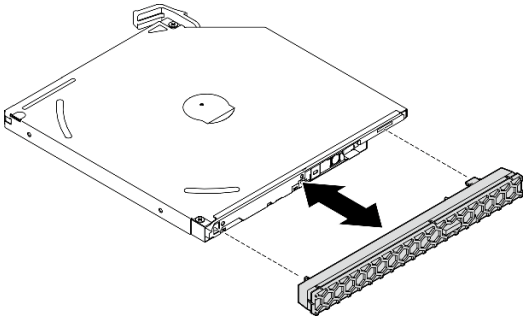

Figure 58. Installing the optical drive bezel

Step 4. Install the optical drive.

a. ❶ From outside of the chassis, insert the optical drive into the chassis.

b. ❷ Slide the optical drive inward until the latch snaps into place.

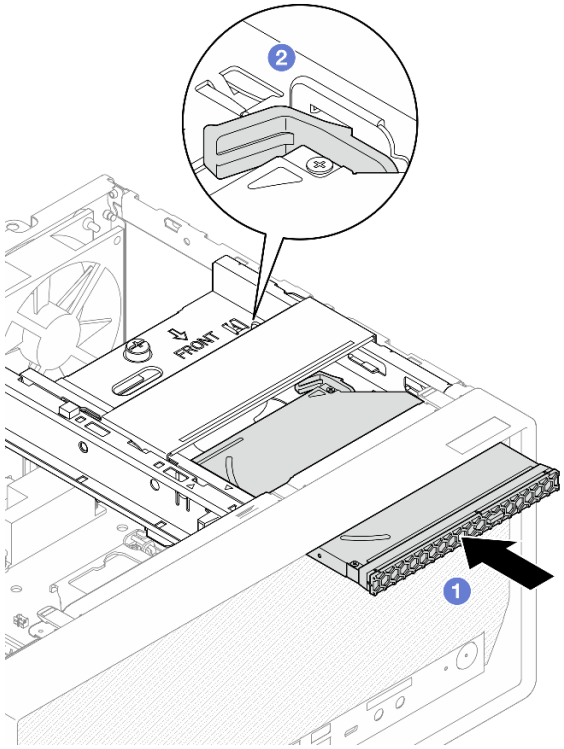

Figure 59. Installing the optical drive

Step 5. Connect the signal and power cable to the system board, see “Internal cable routing” on page 19.

Remove the optical drive cage

Follow this procedure to remove the optical drive cage.

S002

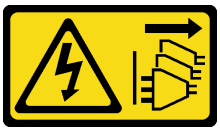

CAUTION:
The power-control button on the device and the power switch on the power supply do not turn off the electrical current supplied to the device. The device also might have more than one power cord. To remove all electrical current from the device, ensure that all power cords are disconnected from the power source.

About this task

Attention:

- Read “Safety inspection checklist” on page 43 and “Installation Guidelines” on page 41 to ensure that you work safely.
- Turn off the server and peripheral devices, and disconnect the power cords and all external cables, see “Power off the server” on page 99.
- If the server is in a rack, remove it from the rack. See “Remove the server from the rails” on page 47.
- Remove any locking device that secures the server, such as a Kensington lock or a padlock.
- Place the server on its side with the cover up.

Watch the procedure

A video of this procedure is available at YouTube: https://www.youtube.com/playlist?list=PLYV5R7hVcs-AU3iY3F7lq3qfqr5caGblu.

Procedure

Step 1. Make preparation for this task.

a. Remove the server cover, see “Remove the server cover” on page 49.

Note: The heat sink and processor could be very hot. To avoid burning yourself, wait for a few minutes after turning off the server before you remove the server cover.

b. If applicable, remove the optical drive, see “Remove an optical drive” on page 71.

Step 2. Remove the optical drive cage from the chassis.

a. ❶ Rotate the handle on the optical drive cage.

b. ❷ Lift the optical drive cage out from the chassis.

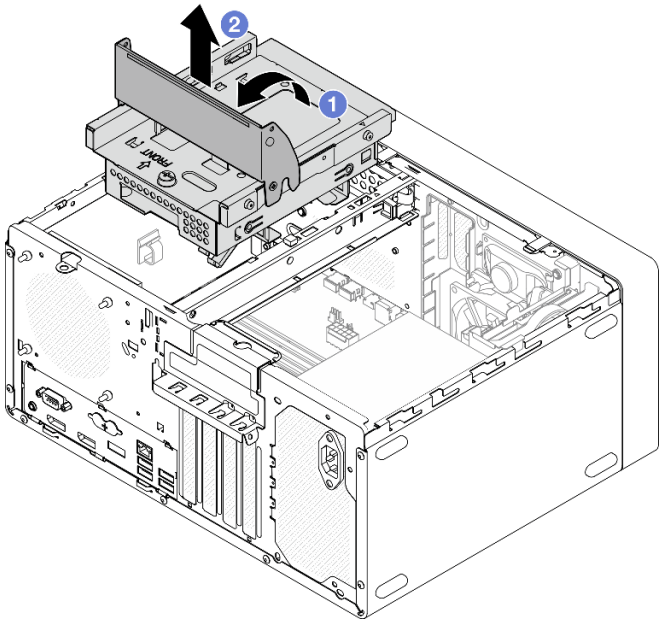

Figure 60. Removing the optical drive cage

Install the optical drive cage

Follow this procedure to install the optical drive.

S002

CAUTION:
The power-control button on the device and the power switch on the power supply do not turn off the electrical current supplied to the device. The device also might have more than one power cord. To remove all electrical current from the device, ensure that all power cords are disconnected from the power source.

S006

CAUTION:
When laser products (such as CD-ROMs, DVD drives, fiber optic devices, or transmitters) are installed, note the following:

- **Do not remove the covers. Removing the covers of the laser product could result in exposure to hazardous laser radiation. There are no serviceable parts inside the device.**
- **Use of controls or adjustments or performance of procedures other than those specified herein might result in hazardous radiation exposure.**

About this task

Attention:

- Read “Safety inspection checklist” on page 43 and “Installation Guidelines” on page 41 to ensure that you work safely.

Watch the procedure

A video of this procedure is available at YouTube: https://www.youtube.com/playlist?list=PLYV5R7hVcs-AU3iY3F7lq3qfqr5caGblu.

Procedure

Step 1. Make sure the cage bar is installed in the chassis. To install the cage bar, see “Install the server cover” on page 92.

Step 2. If necessary, install the 3.5-inch drive assembly to the optical drive cage. See “Install a simple-swap drive and the drive cage (bay 3)” on page 65.

Step 3. Install the optical drive cage.

a. ❶ Align the four pins on the sides of the optical drive cage with the four slots on the chassis and cage bar; then, lower the optical drive cage into the chassis.

b. ❷ Ensure the optical drive cage is seated correctly; then, rotate the optical drive cage handle toward the front of the chassis to secure the optical drive cage into place.

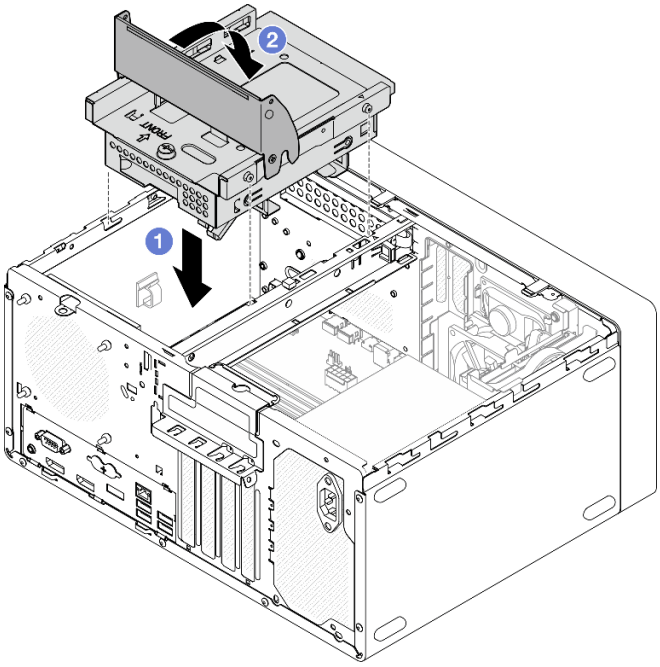

Figure 61. Installing the optical drive cage

Step 4. If applicable, connect the signal and power cable of the 3.5-inch drive to the system board, see “Internal cable routing” on page 19.

Install the intrusion switch

Follow this procedure to install the intrusion switch.

S002

CAUTION:
The power-control button on the device and the power switch on the power supply do not turn off the electrical current supplied to the device. The device also might have more than one power cord. To remove all electrical current from the device, ensure that all power cords are disconnected from the power source.

About this task

Attention:

1. Read “Safety inspection checklist” on page 43 and “Installation Guidelines” on page 41 to ensure that you work safely.
2. Touch the static-protective package that contains the component to any unpainted metal surface on the server; then, remove it from the package and place it on a static-protective surface.

Watch the procedure

A video of this procedure is available at YouTube: https://www.youtube.com/playlist?list=PLYV5R7hVcs-AU3iY3F7lq3qfqr5caGblu.

Procedure

Step 1. (Optional) If you are installing an intrusion switch option, assemble the intrusion switch. Insert the intrusion switch into the bracket until it click into place.

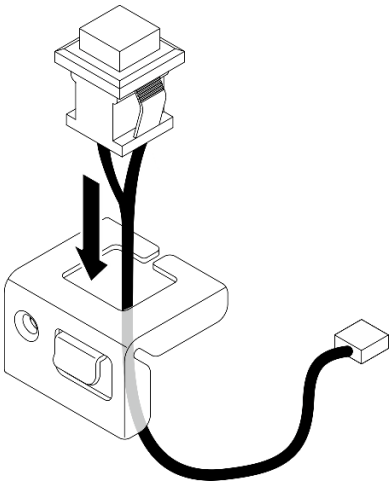

Figure 62. Assembling the intrusion switch

Step 2. Install the intrusion switch.

a. ❶ Align the intrusion switch to the slot on the chassis.

b. ❷ Fasten the screw to secure the intrusion switch to the chassis.

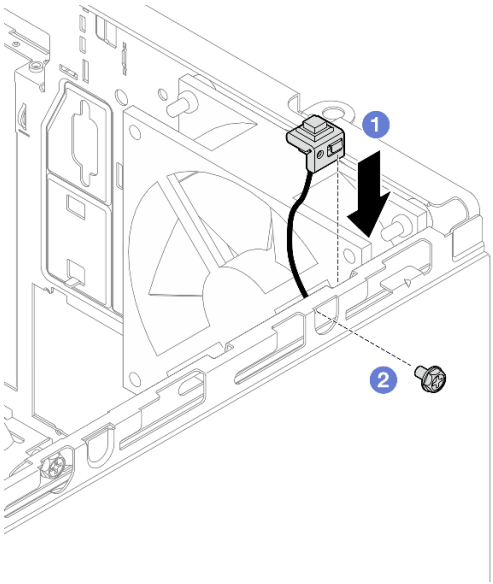

Figure 63. Installing the intrusion switch

Step 3. Connect the intrusion switch cable to the system board, see “Internal cable routing” on page 19.

Step 4. Enable intrusion switch feature in BIOS Setup Utility.

1. Before the operating system starts up, repeatedly press and release **F1** to start text-based BIOS interface.
2. Go to **Setup Utility → Security → Chassis Intrusion Detection**, and press **Enter**.
3. Select **Enabled**, and press **Enter**.
4. To save settings and exit the Setup Utility, press **F10**. Select **Yes** in the displayed window, and press **Enter**.

Install the fan (front and rear)

Follow this procedure to install the front fan or rear fan.

S002

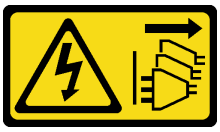

CAUTION:
The power-control button on the device and the power switch on the power supply do not turn off the electrical current supplied to the device. The device also might have more than one power cord. To remove all electrical current from the device, ensure that all power cords are disconnected from the power source.

About this task

Attention:

1. Read “Safety inspection checklist” on page 43 and “Installation Guidelines” on page 41 to ensure that you work safely.

2. Touch the static-protective package that contains the component to any unpainted metal surface on the server; then, remove it from the package and place it on a static-protective surface.

Watch the procedure

A video of this procedure is available at YouTube: https://www.youtube.com/playlist?list=PLYV5R7hVcs-AU3iY3F7lq3qfqr5caGblu.

Procedure

Step 1. Before installing the front fan, remove the front bezel, see “Remove the front bezel” on page 51.

Step 2. Install the front fan or rear fan.

a. ❶ Align the four rubber mounts on the fan with the corresponding holes on the chassis.

b. ❷ With a pair of pliers, gently pull the tips of the four rubber mounts though the holes until the fan is secured to the chassis.

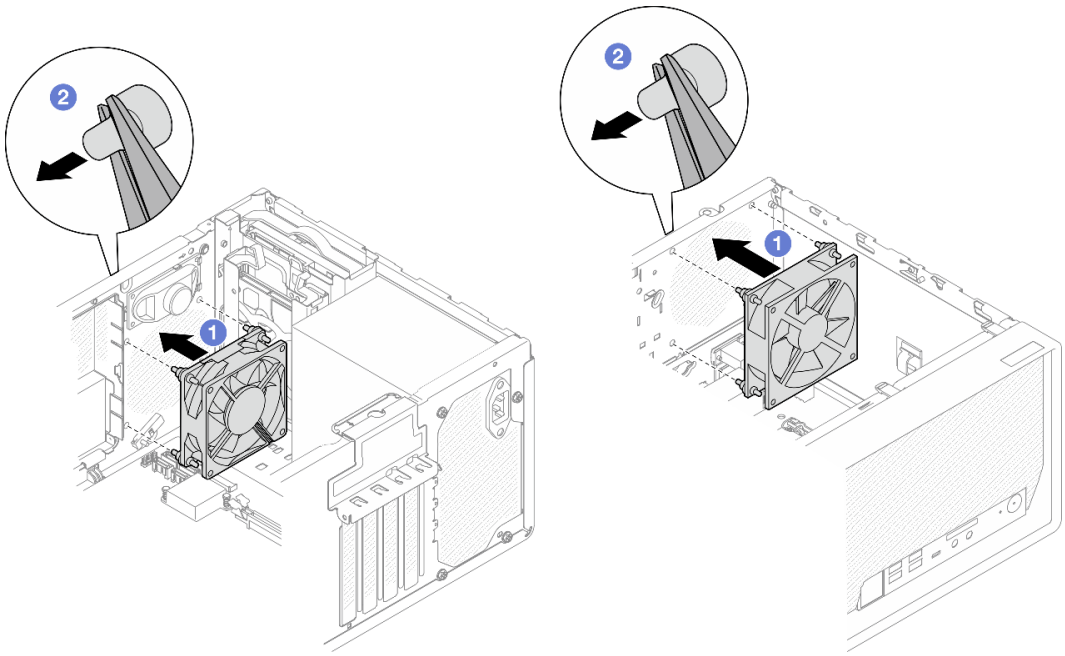

Figure 64. Installing the front fan or the rear fan

Note: Make sure the rubber mounts are fully pulled out of the holes to secure the fans steadily to the chassis.

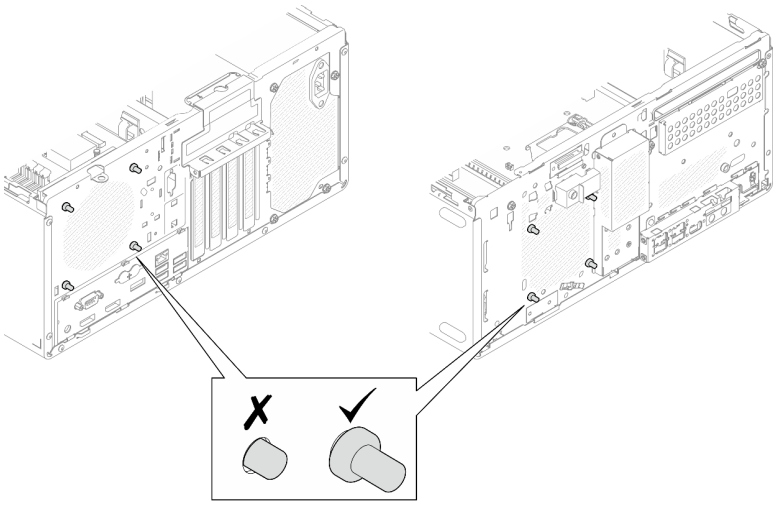

Figure 65. Front fan and rear fan rubber mounts installation

Step 3. Connect the fan cable to the system board, see “Internal cable routing” on page 19.

Install a memory module

Follow this procedure to install a memory module.

S002

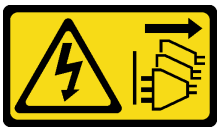

CAUTION:
The power-control button on the device and the power switch on the power supply do not turn off the electrical current supplied to the device. The device also might have more than one power cord. To remove all electrical current from the device, ensure that all power cords are disconnected from the power source.

About this task

Important: Ensure that you consider and follow the memory module installation rules when performing the operation, see “Memory module installation rules” on page 45.

Attention:

- Read “Safety inspection checklist” on page 43 and “Installation Guidelines” on page 41 to ensure that you work safely.
- Touch the static-protective package that contains the component to any unpainted metal surface on the server; then, remove it from the package and place it on a static-protective surface.

Memory modules are sensitive to static discharge and require special handling. In addition to the standard guidelines of “Handling static-sensitive devices” on page 44:

- Always wear an electrostatic-discharge strap when removing or installing memory modules. Electrostatic-discharge gloves can also be used.

- Keep each memory module separated from one another. Do not stack memory modules directly on top of each other during storage.
- Keep the gold memory module connector contacts from touching anything.
- Handle memory modules with care: never bend, twist, or drop a memory module.

Watch the procedure

A video of this procedure is available at YouTube: https://www.youtube.com/playlist?list=PLYV5R7hVcs-AU3iY3F7lq3qfqr5caGbIu.

About this task

Step 1. Locate the memory module slots and determine memory module installation order based on "Memory module installation rules" on page 45.

Step 2. Make sure that both retaining clips on the memory module connector are in the open position.

a. ❶ With the tip of a pointed tool, carefully press the retaining clips.

b. ❶ Push the retaining clips outward on each end of the memory module slot.

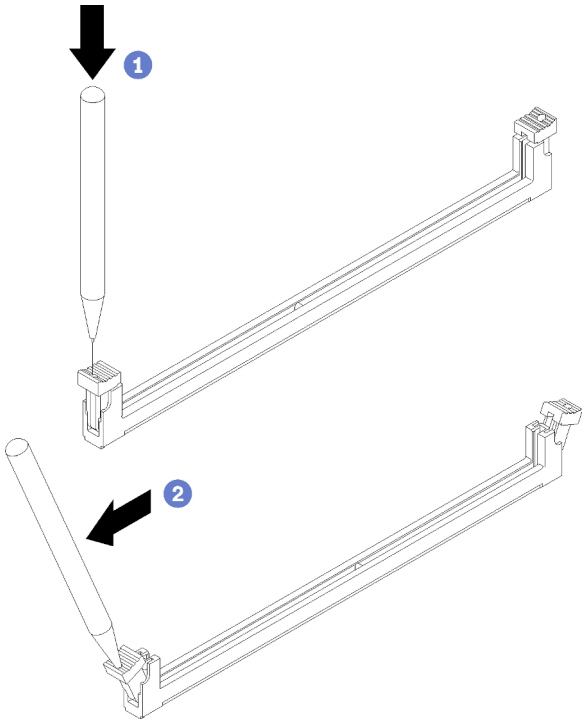

Figure 66. Opening the memory module retaining clips

Step 3. Align the memory module with the slot; then, press the memory module into the slot with even pressure on both ends of the memory module until the retaining clips snap into the locked position.

Note: Make sure that the small tabs on the retaining clips engage with the notches on the memory module. If there is a gap between the memory module and the retaining clips, it indicates that the memory module has not been properly installed. Remove the memory module and reinstall it.

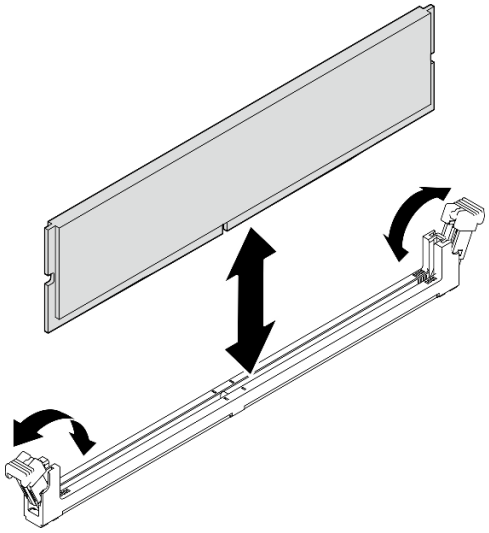

Figure 67. Installing a memory module

Install an M.2 drive

Follow this procedure to install an M.2 drive.

S002

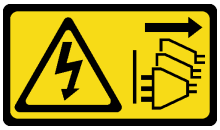

CAUTION:
The power-control button on the device and the power switch on the power supply do not turn off the electrical current supplied to the device. The device also might have more than one power cord. To remove all electrical current from the device, ensure that all power cords are disconnected from the power source.

About this task

Attention:

- Read “Safety inspection checklist” on page 43 and “Installation Guidelines” on page 41 to ensure that you work safely.
- Touch the static-protective package that contains the component to any unpainted metal surface on the server; then, remove it from the package and place it on a static-protective surface.

Watch the procedure

A video of this procedure is available at YouTube: https://www.youtube.com/playlist?list=PLYV5R7hVcs-AU3iY3F7lq3qfqr5caGblu.

About this task

Step 1. Make sure the 2.5-drive is removed from drive bay 2, see “Remove a simple-swap drive (bay 1-2)” on page 55.

Step 2. Make sure the post on the M.2 drive retainer is lifted away from the retainer.

Step 3. Install the M.2 drive.

Note: The thermal sensor cable should be placed under the M.2 drive.

a. ❶ Position the M.2 drive at an angle and insert it to the M.2 connector.

b. ❷ Place down the M.2 drive onto the M.2 drive retainer.

c. ❸ Insert the retainer post into the retainer to secure the M.2 drive in place.

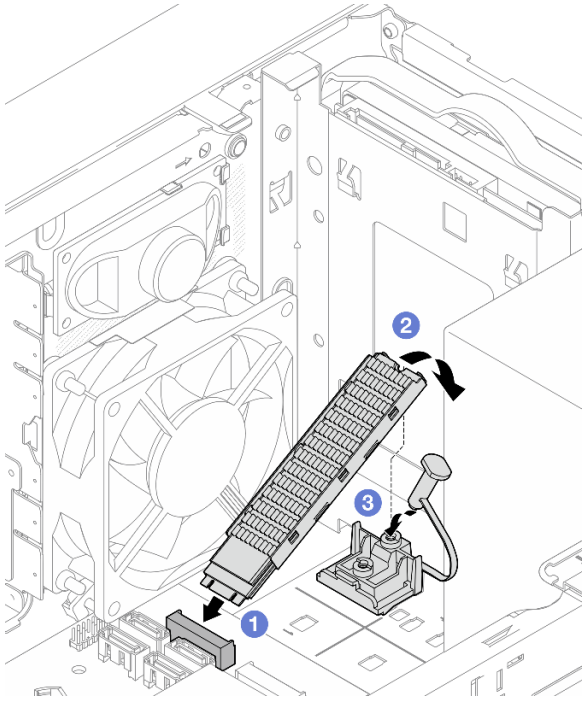

Figure 68. Installing the M.2 drive

Install the M.2 drive retainer

Follow this procedure to install the M.2 drive retainer.

S002

CAUTION:
The power-control button on the device and the power switch on the power supply do not turn off the electrical current supplied to the device. The device also might have more than one power cord. To remove all electrical current from the device, ensure that all power cords are disconnected from the power source.

About this task

Attention:

- Read “Safety inspection checklist” on page 43 and “Installation Guidelines” on page 41 to ensure that you work safely.

Watch the procedure

A video of this procedure is available at YouTube: https://www.youtube.com/playlist?list=PLYV5R7hVcs-AU3iY3F7lq3qfqr5caGblu.

After you finish

Step 1. Align the M.2 drive retainer with the three slots on chassis, and lower the retainer into the chassis; then, slide the retainer toward the 2.5-inch drive to secure it in place.

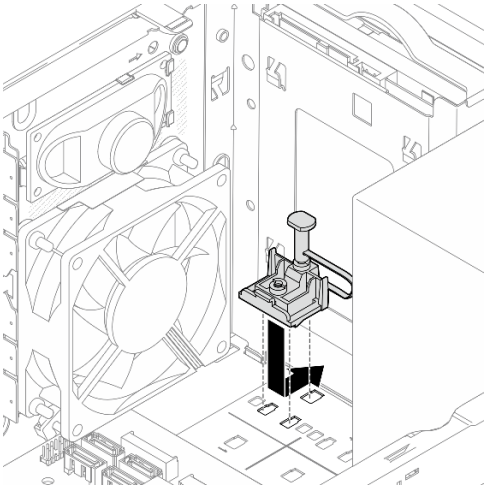

Figure 69. Installing the M.2 drive retainer

About this task

Install an M.2 drive, see “Install an M.2 drive” on page 84.

Install a PCIe adapter

Follow this procedure to install a PCIe adapter.

S002

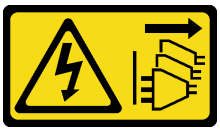

CAUTION:
The power-control button on the device and the power switch on the power supply do not turn off the electrical current supplied to the device. The device also might have more than one power cord. To remove all electrical current from the device, ensure that all power cords are disconnected from the power source.

About this task

Attention:

- Read “Safety inspection checklist” on page 43 and “Installation Guidelines” on page 41 to ensure that you work safely.
- Touch the static-protective package that contains the component to any unpainted metal surface on the server; then, remove it from the package and place it on a static-protective surface.

Notes:

- The PCIe adapter might look different from the illustration.
- Make sure to read and follow the documentation that comes with the PCIe adapter.

PCIe slot support

- PCIe slot 1: PCI Express 4.0 x16 (FHHL 75W PCIe adapter)
- PCIe slot 2: PCI Express 3.0 x1 (FHHL, 25W PCIe adapter)
- PCIe slot 3: PCI Express 3.0 x4 in x16 slot (FHHL, 25W PCIe adapter)

Notes:

- The RAID adapter should be installed in PCIe slot 1.
- Pentium processor supports up to PCI Express 3.0.
- When installing PCIe x8/x16 adapter to PCIe Slot 3, the PCIe adapter performance might be degraded due to the bandwidth of PCIe slot 3 (x4).
- For a list of the supported PCIe adapters, see https://serverproven.lenovo.com/.
- The PCIe adapter might look different from the illustration.
- Make sure to read and follow the documentation that comes with the PCIe adapter.

Watch the procedure

A video of this procedure is available at YouTube: https://www.youtube.com/playlist?list=PLYV5R7hVcs-AU3iY3F7lq3qfqr5caGbIu.

About this task

Step 1. If a bracket is installed in the chassis, open the PCIe adapter retainer bracket and remove the bracket from the chassis. Keep the bracket for future use.

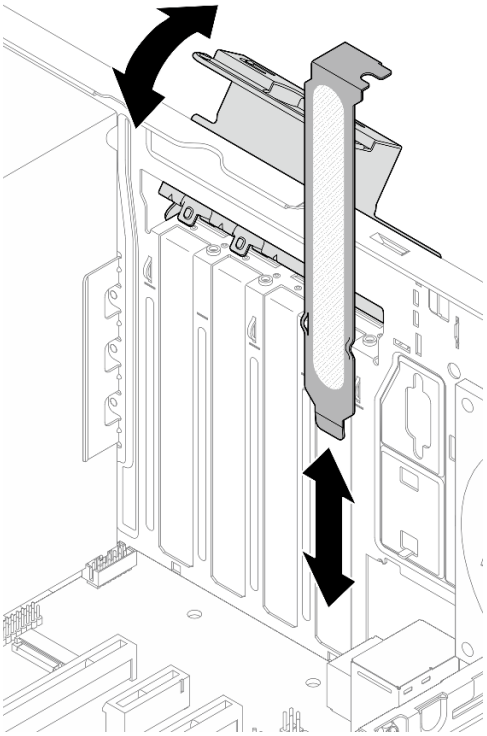

Figure 70. Removing a PCIe adapter bracket

Step 2. Locate the applicable PCIe slot. For more information about the PCIe slots, see “Specifications” on page 3.

Step 3. Install the PCIe adapter.

a. ❶ Align the PCIe adapter to the slot; then, gently press both ends of the PCIe adapter until it is securely seated in the slot with ❷ the retaining clip clicks into the locked position.

b. ❸ Rotate the PCIe adapter retainer towards the chassis until it snaps into locked position.

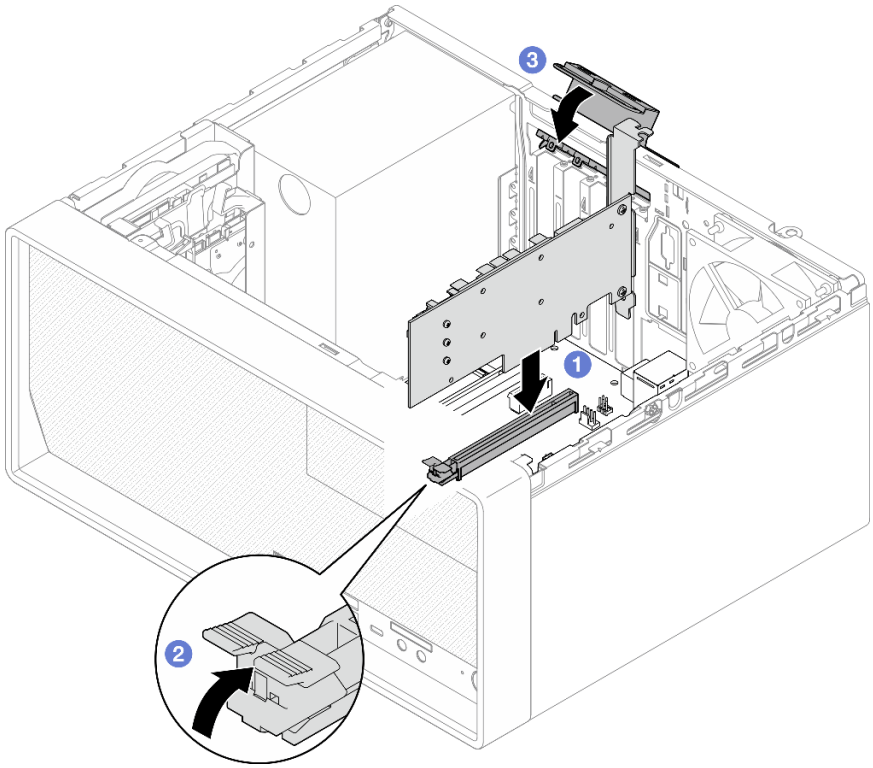

Figure 71. Installing a PCIe adapter

Step 4. Connect the PCIe adapter cables. For more information on RAID adapter cable routing, see "Internal cable routing" on page 19.

Install the CMOS battery (CR2032)

Consider the following when replacing the CMOS battery in the server:

- When replacing the CMOS battery, you must replace it with another CMOS battery of the same type from the same manufacturer.
- After replacing the CMOS battery, make sure to reconfigure the server and reset system date and time.
- To avoid possible danger, make sure to read and follow the safety statements.
- Lenovo has designed this product with your safety in mind. The CMOS battery must be handled correctly to avoid possible danger. If you install the CMOS battery, do adhere to the following instructions.

  Note: In the U. S., call 1-800-IBM-4333 for information about battery disposal.
- If you replace the original CMOS battery with a heavy-metal battery or a battery with heavy-metal components, be aware of the following environmental consideration. Batteries and accumulators that contain heavy metals must not be disposed of along with normal domestic waste. They should be taken back free of charge by for recycle or proper disposal by the manufacturer, distributor, or representatives.

S002

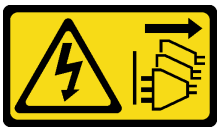

CAUTION:
The power-control button on the device and the power switch on the power supply do not turn off the electrical current supplied to the device. The device also might have more than one power cord. To remove all electrical current from the device, ensure that all power cords are disconnected from the power source.

S004

CAUTION:
When replacing the lithium battery, use only Lenovo specified part number or an equivalent type battery recommended by the manufacturer. If your system has a module containing a lithium battery, replace it only with the same module type made by the same manufacturer. The battery contains lithium and can explode if not properly used, handled, or disposed of.

Do not:

- **Throw or immerse into water**
- **Heat to more than 100°C (212°F)**
- **Repair or disassemble**

Dispose of the battery as required by local ordinances or regulations.

S005

CAUTION:
The battery is a lithium ion battery. To avoid possible explosion, do not burn the battery. Exchange it only with the approved part. Recycle or discard the battery as instructed by local regulations.

About this task

Attention:

- Read “Safety inspection checklist” on page 43 and “Installation Guidelines” on page 41 to ensure that you work safely.
- Touch the static-protective package that contains the component to any unpainted metal surface on the server; then, remove it from the package and place it on a static-protective surface.

Watch the procedure

A video of this procedure is available at YouTube: https://www.youtube.com/playlist?list=PLYV5R7hVcs-AU3iY3F7lq3qfqr5caGblu.

Procedure

Step 1. Place the CMOS battery on top of the socket with the positive (+) symbol facing up, and press the battery into the seat until it clicks in place.

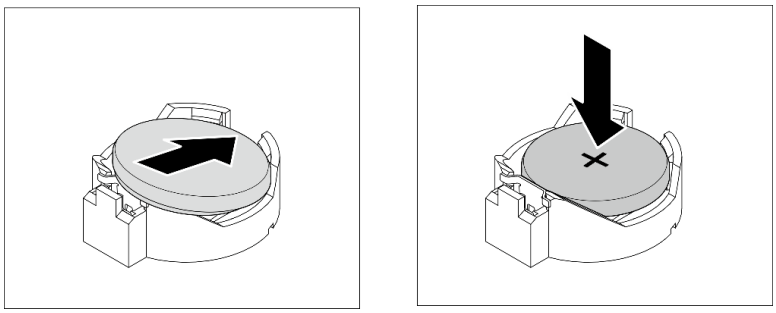

Figure 72. Installing the CMOS battery

After you finish

Reset date, time, and all the passwords.

Install the front bezel

Follow this procedure to install the front bezel.

S002

CAUTION:
The power-control button on the device and the power switch on the power supply do not turn off the electrical current supplied to the device. The device also might have more than one power cord. To remove all electrical current from the device, ensure that all power cords are disconnected from the power source.

About this task

Attention:

- Read “Safety inspection checklist” on page 43 and “Installation Guidelines” on page 41 to ensure that you work safely.

Watch the procedure

A video of this procedure is available at YouTube: https://www.youtube.com/playlist?list=PLYV5R7hVcs-AU3iY3F7lq3qfqr5caGblu.

Procedure

Step 1. Install the front bezel.

a. ❶ Insert the three plastic tabs on the bottom of the front bezel with the corresponding slots on the front of the chassis.

b. ❷ Pivot the front bezel towards to chassis until it snaps into place.

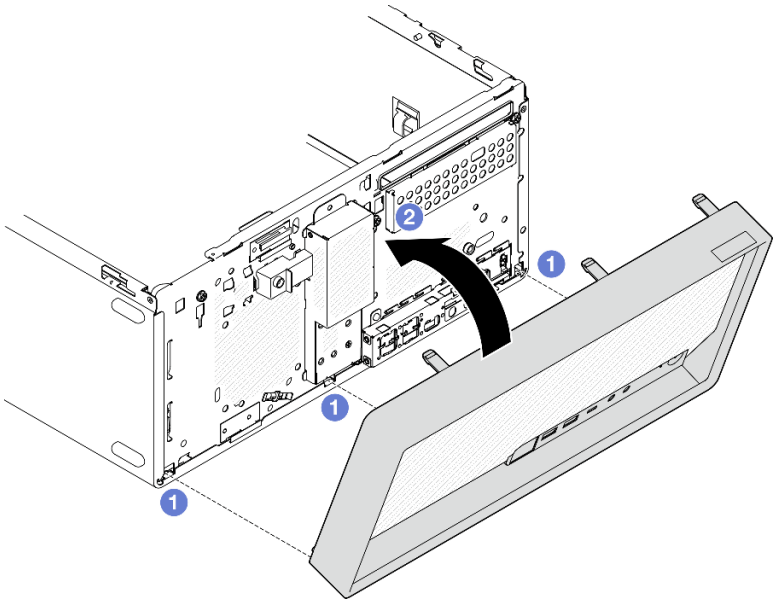

Figure 73. Installing the front bezel

Install the server cover

Follow this procedure to install the server cover.

S002

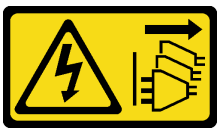

CAUTION:
The power-control button on the device and the power switch on the power supply do not turn off the electrical current supplied to the device. The device also might have more than one power cord. To remove all electrical current from the device, ensure that all power cords are disconnected from the power source.

S014

CAUTION:
Hazardous voltage, current, and energy levels might be present. Only a qualified service technician is authorized to remove the covers where the label is attached.

S033

CAUTION:
Hazardous energy present. Voltages with hazardous energy might cause heating when shorted with metal, which might result in spattered metal, burns, or both.

About this task

Attention:

- Read “Safety inspection checklist” on page 43 and “Installation Guidelines” on page 41 to ensure that you work safely.
- Ensure that all adapters and other components are installed and seated correctly, and that you have not left loose tools or parts inside the server.
- Ensure that all internal cables are correctly routed, see “Internal cable routing” on page 19 for more information.
- If you are installing a new server cover, attach the service label to the inside of the new server cover if necessary.

  Note: A new server cover comes without a service label attached. If you need a service label, order it together with the new server cover. The service label is free of charge.

Watch the procedure

A video of this procedure is available at YouTube: https://www.youtube.com/playlist?list=PLYV5R7hVcs-AU3iY3F7Iq3qfqr5caGbIu.

Procedure

Step 1. **(Optional)** Install the cage bar.

a. Insert the tabs on cage bar to the slots on the rear side of the chassis.

b. Align the tabs on the other end of the cage bar to the slots on the front side of the chassis, and rotate the cage bar toward the front of the chassis until the cage bar is secured in place.

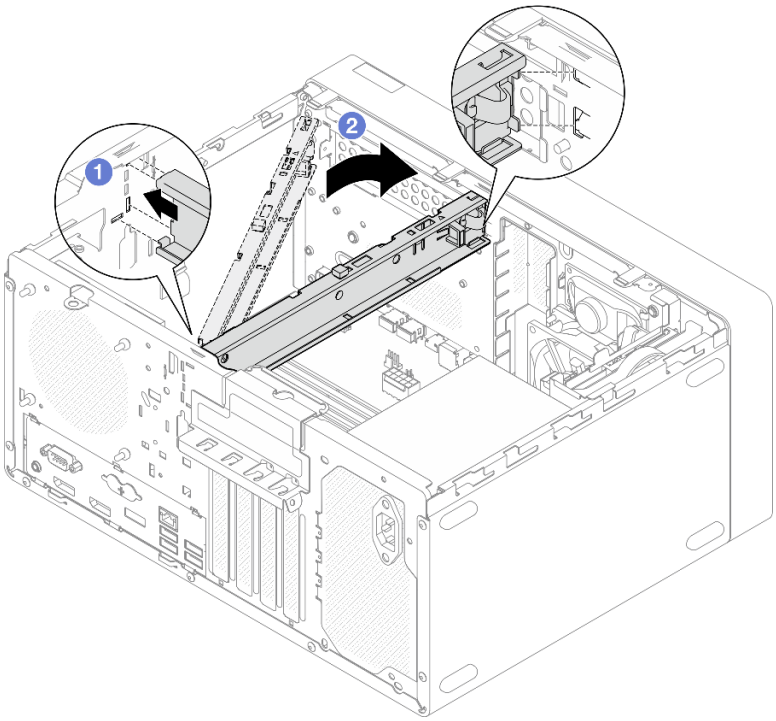

Figure 74. Installing the cage bar

Step 2. Install the serve cover.

a. ❶ Align the server cover to the slots on the side of the chassis. Ensure that all the tabs on the cover align are engaged with chassis properly; then, slide the cover towards the front bezel until it snaps in place.

b. ❷ Use a screwdriver to fasten the two screws to secure the cover to the chassis.

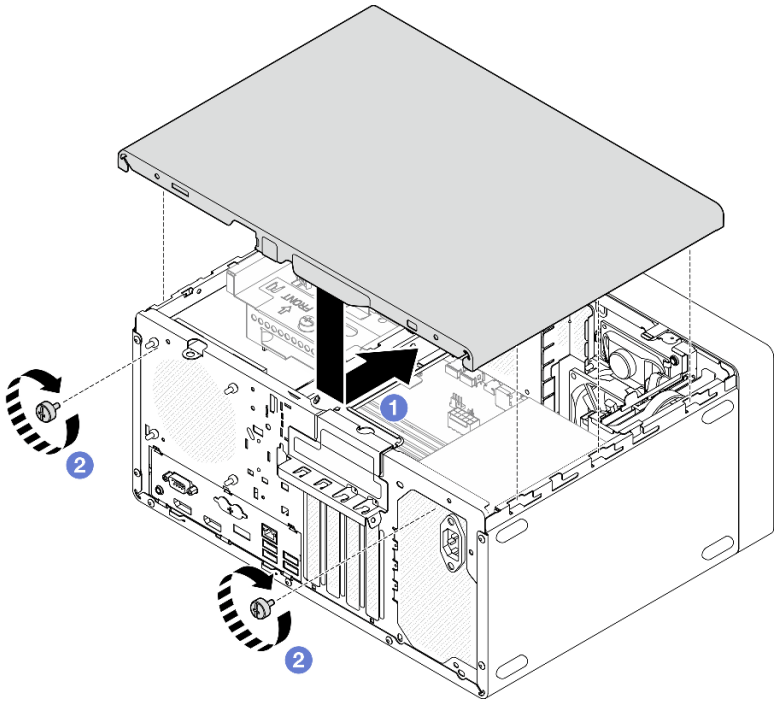

Figure 75. Installing the server cover

Install the server to the rails

Follow this procedure to install the server to the rails.

S002

CAUTION:
The power-control button on the device and the power switch on the power supply do not turn off the electrical current supplied to the device. The device also might have more than one power cord. To remove all electrical current from the device, ensure that all power cords are disconnected from the power source.

S014

CAUTION:
Hazardous voltage, current, and energy levels might be present. Only a qualified service technician is authorized to remove the covers where the label is attached.

S033

CAUTION:
Hazardous energy present. Voltages with hazardous energy might cause heating when shorted with metal, which might result in spattered metal, burns, or both.

About this task

Attention:

- Read “Safety inspection checklist” on page 43 and “Installation Guidelines” on page 41 to ensure that you work safely.
- Turn off the server and peripheral devices, and disconnect the power cords and all external cables, see “Power off the server” on page 99.

Note: To install rails to rack, see the *Rail Installation Guide* at https://serveroption.lenovo.com/rail_options/rail_options_tower_servers.

Watch the procedure

A video of this procedure is available at YouTube: https://www.youtube.com/playlist?list=PLYV5R7hVcs-AU3iY3F7lq3qfqr5caGblu.

Procedure

Step 1. Install the four brackets to the tray as illustrated.

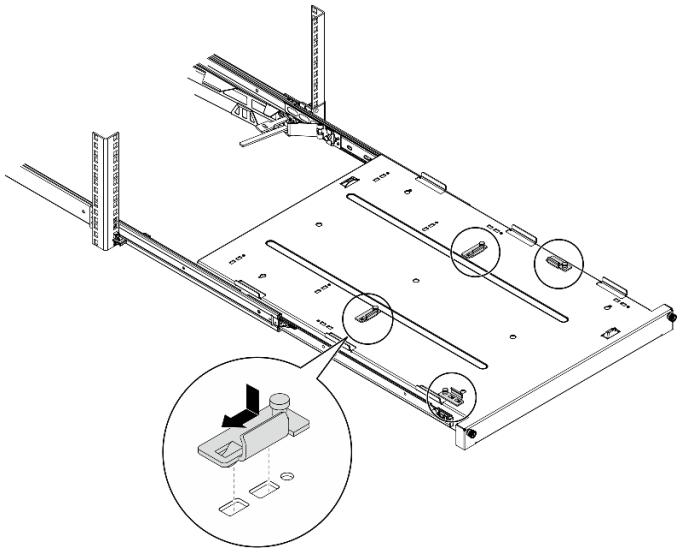

Figure 76. Installing the brackets to the tray

Step 2. Install the four rubber safety pads to the tray as illustrated.

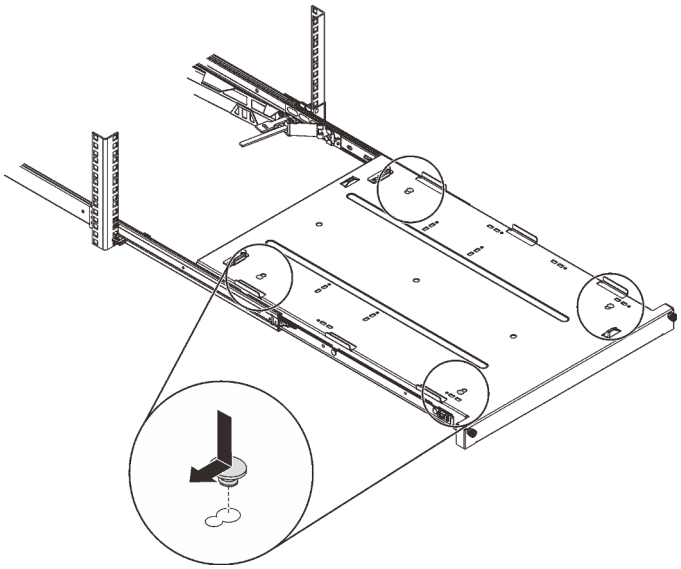

Figure 77. Installing the rubber safety pads to the tray

Step 3. Orient the server to have the server cover facing up and the front bezel facing the front of the rails; then, align the server with the brackets and the tab on the front of the tray, and gently place the server on the tray.

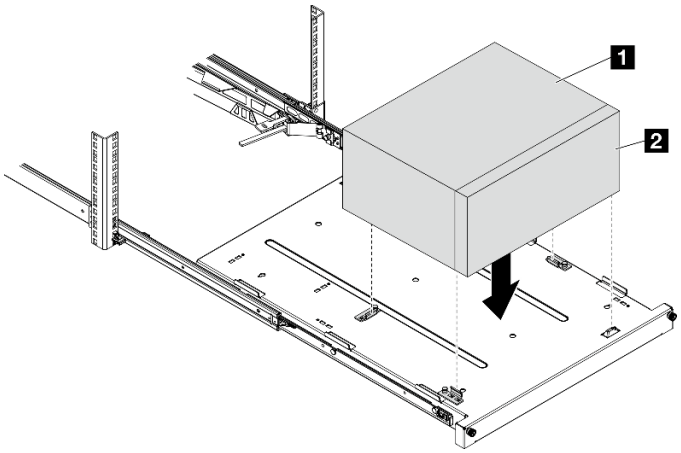

Figure 78. Installing the server to the tray

1	Server cover
2	Server front bezel

Step 4. Install the server into the rack cabinet.

a. ❶ Lift the rail latches on both sides.

b. ❷ Gently slide and push the tray into the rack cabinet.

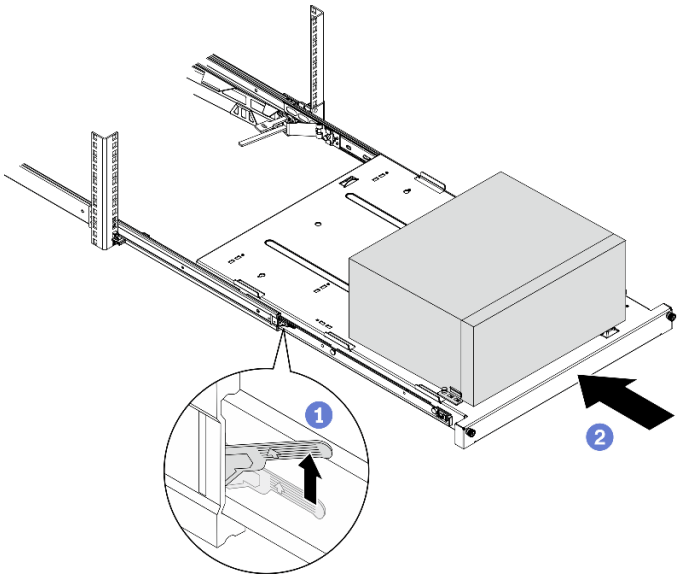

Figure 79. Installing the server into the rack cabinet

Step 5. Secure the tray with two M6 x 16 screws to the front of the rack cabinet.

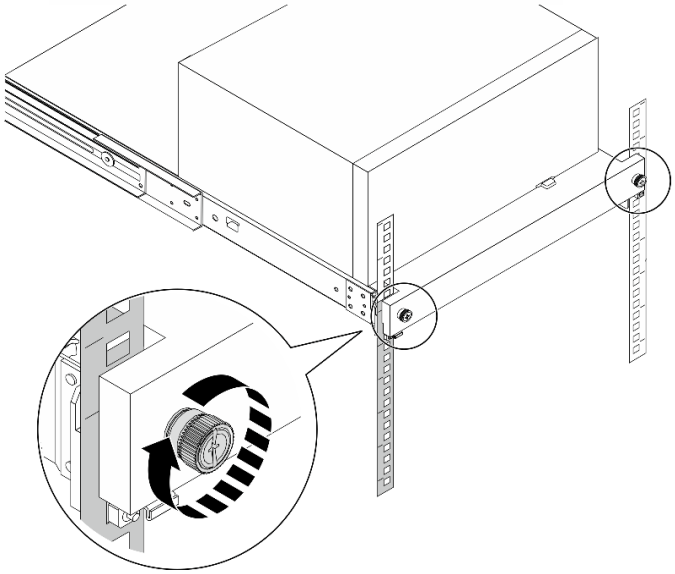

Figure 80. Securing the tray with screws

Cable the server

Attach all external cables to the server. Typically, you will need to connect the server to a power source, to the data network, and to storage. In addition, you will need to connect the server to the management network.

Connect to power

Connect the server to power.

Connect to the network

Connect the server to the network.

Connect to storage

Connect the server to any storage devices.

Power on the server

The server can be turned on (power LED on) in any of the following ways:

- Press the power button. Before the operating system starts running, you can press **Enter** to enter **Startup Interrupt Menu**. In this menu, a few options are available for various purposes:
  - Press **Esc** to resume to normal startup.
  - Press **F1** to enter the **Setup Utility**.
  - Press **F10** to diagnose hardware.
  - Press **F12** to choose a temporary startup device.
  - Press **Ctrl** + **P** to enter the Management Engine setup screen or initiate a remote connection.
  - Press **Enter** to pause.
- The server can restart automatically after a power interruption.

Note: If the boot screen lingers with the message of “System Security - The system has been tempered with,” it means the server cover is not properly installed. Remove and reinstall it (see “Remove the server cover” on page 49 and “Install the server cover” on page 92); then, restart the server.

For information about powering off the server, see “Power off the server” on page 99.

Validate server setup

After powering up the server, make sure that the LEDs are lit and that they are white.

Power off the server

The server remains in a standby state when it is connected to a power source. To remove all power from the server (power-on LED off), you must disconnect all power cables.

To place the server in a standby state (power-on LED flashes once per second):

- Start an orderly shutdown using the operating system (if supported by your operating system).
- Press the power-on button to start an orderly shutdown (if supported by your operating system).
- Press and hold the power button for more than 4 seconds to force a shutdown.

Chapter 4. System configuration

Complete these procedures to configure your system.

Note: Some Lenovo systems management applications, including XClarity Administrator, XClarity Controller, XClarity Energy Manager, and XClarity Essentials, are not supported by ST50 V2.

Update the firmware

Go to Lenovo Datacenter Support site for the latest firmware update package.

To update the firmware from a flash device, complete the following steps:

1. Go to https://datacentersupport.lenovo.com/tw/en/products/servers/thinksystem/st50v2/downloads/driver-list/. All the downloadable firmware packages for ST50 V2 are available on this site.
2. Download the latest version of firmware update packages.
3. Follow the instructions enclosed in the package to update the firmware.

Note: Perform the firmware update in operating system accordingly to the instructions.

Configure the firmware

Read this section to learn about how to set up the firmware for the server.

Starting the Setup Utility program

Follow this procedure to start the Setup Utility program.

To start the Setup Utility program, complete the following steps:

Step 1. Power on or restart the server.

Step 2. Before the operating system starts up, repeatedly press and release **F1**. It will lead to the text-based BIOS interface.

Note: If a BIOS password has been set, the Setup Utility program will not open until you enter the correct password.

Changing the display language of the Setup Utility program

The Setup Utility program supports three display languages: English and simplified Chinese.

Step 1. Start the Setup Utility program, see “Starting the Setup Utility program” on page 101.

Step 2. From the main interface, locate **Language** and press **Enter**.

Step 3. Select the display language.

Enabling or disabling a device

This section provides information about how to enable or disable hardware devices, such as USB connectors or storage drives.

To enable or disable a device, complete the following steps:

© Copyright Lenovo 2022, 2025

Step 1. Start the Setup Utility program, see “Starting the Setup Utility program” on page 101.

Step 2. Select **Devices**.

Step 3. Select the device to enable or disable, and press **Enter**.

Step 4. Select the desired setting, and press **Enter**.

Step 5. To save settings and exit the Setup Utility program, press **F10**; then, select **Yes** in the displayed window, and press **Enter**.

Enabling or disabling the automatic power-on

Automatic Power On in Setup Utility program provides various power-on options.

To enable or disable Automatic Power On, complete the following steps:

Step 1. Start the Setup Utility program, see “Starting the Setup Utility program” on page 101.

Step 2. Select **Power → Enhanced Power Saving Mode** and press **Enter**.

Step 3. Select the feature you want to enable or disable, and press **Enter**.

Step 4. Select the desired option, and press **Enter**.

Step 5. To save settings and exit the Setup Utility program, press **F10**; then, select **Yes** in the displayed window, and press **Enter**.

Acoustic/Thermal optimal performance

Intelligent Cooling Performance Mode menu allows you to adjust server performance to achieve optimal acoustic or thermal conditions.

Note: When **Load Optimal Defaults** is selected, the Intelligent Cooling Performance Mode will return to its default settings as **Best Performance**. Make sure to set the Performance Mode according to your system configuration.

Three modes are available in Performance Mode menu:

- **Best Experience:** This mode allows the server to work with less noise at normal thermal level, and applies to the following configuration:
  - Up to two drives, zero or one M.2 drive module, and zero or one slime OSS
  - Up to one PCIe adapter (not including GPU adapter)
- **Best Performance:** This mode allows the server to work at a lower thermal level with normal acoustic performance, and applies to the following configuration:
  - Up to three drives, zero or one M.2 drive module, and zero or one slime OSS
  - Up to one PCIe adapter (not including GPU adapter)
- **Full Speed:** This mode allows the server to work with optimal performance. There is no limitation of drive or adapter configuration for this mode, but there will be more acoustic noise.

To switch between better acoustic and thermal performance mode, complete the following steps:

Step 1. Start the Setup Utility program, see “Starting the Setup Utility program” on page 101.

Step 2. Select **Power → Intelligent Cooling** and press **Enter**.

Step 3. Select **Performance Mode** and press **Enter**.

Step 4. Select the desired option, and press **Enter**.

Step 5. To save settings and exit the Setup Utility program, press **F10**; then, select **Yes** in the displayed window, and press **Enter**.

Configuration change detection

With configuration-change detection enabled, an error message is displayed in POST when configuration changes of some hardware devices (such as storage drives or memory modules) are detected.

To enable or disable the configuration change detection, complete the following steps:

Step 1. Start the Setup Utility program, see “Starting the Setup Utility program” on page 101.

Step 2. Select **Security → Configuration Change Detection** and press **Enter**.

Step 3. Select the desired option, and press **Enter**.

Step 4. To save settings and exit the Setup Utility program, press **F10**; then, select **Yes** in the displayed window, and press **Enter**.

To bypass the error message and log in to the operating system, do one of the following:

- Press **F2**.
- Start and exit the Setup Utility program , see “Starting the Setup Utility program” on page 101 and “Exiting the Setup Utility program” on page 105.

Using passwords

Passwords can be set to prevent unauthorized access to the server.

Despite passwords enhance data security, they are not required. Read the following topics if you decide to set any passwords.

To start the Setup Utility program, complete the following steps:

Password Types

The following types of passwords are available in the Setup Utility program:

- Power-on password

  When a power-on password is set, you are prompted to enter a valid password each time the server is turned on. The server cannot be used until the valid password is entered.

- Administrator password

  Setting an administrator password deters unauthorized users from changing configuration settings. If you are responsible for maintaining the configuration settings of several servers, you might want to set an administrator password.

  When an administrator password is set, you are prompted to enter a valid password each time you try to access the Setup Utility program. The Setup Utility program cannot be accessed until a valid password is entered.

  If both the power-on password and administrator password are set, you can enter either password. However, you must use your administrator password to change any configuration settings.

- Hard disk password

  Setting a hard disk password prevents unauthorized access to the data on the internal storage drive (such as a hard disk drive). When a hard disk password is set, you are prompted to enter a valid password each time you try to access the storage drive.

Notes:

- Even if the storage drive is removed from one server and installed in another, the hard-disk password is still valid.
- If the hard disk password is forgotten, there is no way to reset the password or recover data from the storage drive.

Password considerations

A password can be any combination of up to 64 alphabetic and numeric characters. For security reasons, it is recommended to use a strong password that cannot be easily compromised.

Note: The Setup Utility program passwords are case-sensitive.

To set a strong password, consider the following guidelines:

- Have at least eight characters in length
- Contain at least one alphabetic character and one numeric character
- Not be your name or your user name
- Not be a common word or a common name
- Be significantly different from your previous passwords

Setting, changing, or deleting a password

To set, change, or delete a password, complete the following steps:

Step 1. Start the Setup Utility program, see “Starting the Setup Utility program” on page 101.

Step 2. Select **Security**.

Step 3. Depending on the password type, select **Set Supervisor Password** and press **Enter**.

Step 4. Follow the instructions on the right side of the screen to set, change, or delete a password.

Note: A password can be any combination of up to 64 alphabetic and numeric characters. For more information, see Password considerations.

Step 5. To save settings and exit the Setup Utility program, press **F10**; then, select **Yes** in the displayed window, and press **Enter**.

Erasing lost or forgotten passwords (clearing CMOS)

To erase a lost or forgotten password, complete the following steps:

Step 1. Remove any media from the drives and turn off all connected devices and the server; then, disconnect all power cords from electrical outlets and disconnect all cables that are connected to the server.

Step 2. Remove the server cover , see “Remove the server cover” on page 49.

Step 3. Remove the CMOS battery (CR2032), see “Remove the CMOS battery (CR2032)” on page 53.

Step 4. Wait for 10 to 15 seconds; then, reinstall the CMOS battery (CR2032), see “Install the CMOS battery (CR2032)” on page 89.

Step 5. Reinstall the server cover and reconnect the power cord, see “Install the server cover” on page 92.

Step 6. Turn on the server. Before the operating system starts up, press **F1** to enter the Setup Utility.

Step 7. In Setup Utility, make sure the date, time, and other settings are correct.

Step 8. To save settings and exit the Setup Utility program, press **F10**; then, select **Yes** in the displayed window, and press **Enter**.

Selecting a startup device

If the server does not start up from the expected device, you can either change the startup device sequence or select a temporary startup device.

Changing the startup device sequence permanently

To change the startup device sequence permanently, complete the following steps:

Step 1. Depending on the type of the storage device, do one of the following:
- If the storage device is internal, skip to Step 2 the next step on page 105.
- If the storage device is a disc, ensure that your server is turned on. Then, insert the disc into the optical drive.
- If the storage device is an external device other than a disc, connect the storage device to the server.

Step 2. Start the Setup Utility program, see “Starting the Setup Utility program” on page 101.

Step 3. Select **Startup** → **Boot Priority Order**.

Step 4. Follow the instructions on the right side of the screen to change the startup device sequence.

Step 5. To save settings and exit the Setup Utility program, press **F10**; then, select **Yes** in the displayed window, and press **Enter**.

Selecting a temporary startup device

Note: Not all discs and storage drives are applicable as startup device.

To select a temporary startup device, complete the following steps:

Step 1. Depending on the type of the storage device, do one of the following:
- If the storage device is internal, skip to Step 2 the next step on page 105.
- If the storage device is a disc, ensure that your server is turned on. Then, insert the disc into the optical drive.
- If the storage device is an external device other than a disc, connect the storage device to the server.

Step 2. Turn on or restart the server. Before the operating system starts up, repeatedly press and release **F12** until Startup Device Menu is displayed.

Step 3. Select the desired storage device and press **Enter**. The server will start up from the selected device.

Exiting the Setup Utility program

Follow this procedure to exit the Setup Utility program.

To exiting the Setup Utility program, do one the following steps:

- To save the new settings, press **F10**; then, select **Yes** in the displayed window, and press **Enter**.
- If you do not want to save the new settings, select **Exit** → **Discard Changes and Exit** and press **Enter**; then, select **Yes** in the displayed window, and press **Enter**.

Memory configuration

Memory performance depends on several variables, such as memory mode, memory speed, memory ranks, memory population and processor.

More information about optimizing memory performance and configuring memory is available at the Lenovo Press website:

https://lenovopress.com/servers/options/memory

In addition, you can take advantage of a memory configurator, which is available at the following site:

http://1config.lenovo.com/#/memory_configuration

For specific information about the required installation order of memory modules in your server based on the system configuration and memory mode that you are implementing, see “DIMM installation rules” on page 45.

RAID configuration

Using a Redundant Array of Independent Disks (RAID) to store data remains one of the most common and cost-efficient methods to increase server's storage performance, availability, and capacity.

RAID increases performance by allowing multiple drives to process I/O requests simultaneously. RAID can also prevent data loss in case of a drive failure by reconstructing (or rebuilding) the missing data from the failed drive using the data from the remaining drives.

RAID array (also known as RAID drive group) is a group of multiple physical drives that uses a certain common method to distribute data across the drives. A virtual drive (also known as virtual disk or logical drive) is a partition in the drive group that is made up of contiguous data segments on the drives. Virtual drive is presented up to the host operating system as a physical disk that can be partitioned to create OS logical drives or volumes.

An introduction to RAID is available at the following Lenovo Press website:

https://lenovopress.com/lp0578-lenovo-raid-introduction

Detailed information about RAID management tools and resources is available at the following Lenovo Press website:

https://lenovopress.com/lp0579-lenovo-raid-management-tools-and-resources

Deploy the operating system

Tool-based deployment

- **Single-server**
  - Lenovo XClarity Provisioning Manager Lite

    https://pubs.lenovo.com/lxpm-lite/

Manual deployment

If you cannot access the above tools, follow the instructions below, download the corresponding *OS Installation Guide*, and deploy the operating system manually by referring to the guide.

1. Go to https://datacentersupport.lenovo.com/solutions/server-os.
2. Select an operating system from the navigation pane and click **Resources**.
3. Locate the “OS Install Guides” area and click the installation instructions. Then, follow the instructions to complete the operation system deployment task.

Back up the server configuration

After setting up the server or making changes to the configuration, it is a good practice to make a complete backup of the server configuration.

Make sure that you create backups for the following server components:

- **Operating system**

  Use your own operating-system and user-data backup methods to back up the operating system and user data for the server.

Update VPD (Vital Product Data)

VPD (Vital Product Data) must be updated after the system board is replaced.

Step 1. Insert a USB flash drive to the server, and format it.

Step 2. Go to https://datacentersupport.lenovo.com/tw/en/products/servers/thinksystem/st50v2/downloads/driver-list/. Select **Motherboard Devices (core chipset, onboard video, PCIe switches)**, and download `The uEFI VPD SMBIOS Information Update Utility`.

Step 3. Copy and paste the folder that is named `efi` and `amideefix64.efi` to the root folder of the USB flash drive. Make sure the path to `bootX64.efi` is `FS0:\efi\boot\bootX64.efi`.

Step 4. Restart the system. Before the operating system starts up, press **F1** to enter the Setup Utility. Go to **Security → Secure Boot**, and disable the option.

Step 5. To save settings and exit the Setup Utility program, press **F10**; then, select **Yes** in the displayed window, and press **Enter**.

Step 6. Restart the system. Before the operating system starts up, repeatedly press and release **F12** until Startup Device Menu is displayed; then, select the USB flash drive and press **Enter**. The server will start up from the USB flash rive.

Step 7. Update VPD SMBIOS with the following AMIBIOS DMI Editor commands:

```
AMIDEEFIx64.efi [option1] [option2] ... [optionX]
```

Options:

`/SP "String"`	Update the System Machine Type and Model Number. Example: `fs0:\..\amideefix64.efi /sp "7Y48CT01WW"`
`/SS "String"`	Update the System Serial Number. Example: `fs0:\..\amideefix64.efi /ss "J300ST50"`
`/SU "String"`	Update the System UUID. Example, if UUID on Label is B6**75**DF**80**-DE**7C**-11**E9**-B0E2-60BBE2EF7200: `fs0:\..\amideefix64.efi /su "80DF75B67CDEE911B0E260BBE2EF7200"`
`/SV "String"`	Update the System Brand ID. Example: `fs0:\..\amideefix64.efi /sv "ThinkSystem ST50"`

Step 8. After the VPD SMBIOS update is completed, remove the USB flash drive, and press **ALT** + **CTRL** + **DEL** to restart the system.

Step 9. Before the operating system starts up, press **F1** to enter the Setup Utility. Go to **Main → System Summary** to make sure VPD has been properly updated.

Chapter 5. Resolving installation issues

Follow this procedure to resolve issues that you might have when setting up your system.

Use the information in this section to diagnose and resolve problems that you might encounter during the initial installation and setup of your server.

- “The server does not power on” on page 109
- “The server immediately displays the POST Event Viewer when it is turned on” on page 109
- “Embedded hypervisor is not in the boot list” on page 109
- “Server cannot recognize a drive” on page 110
- “Displayed system memory less than installed physical memory” on page 110
- “A Lenovo optional device that was just installed does not work.” on page 111
- “Voltage planar fault is displayed in the event log” on page 111

The server does not power on

Complete the following steps until the problem is solved.

Note: The power button will not function until approximately one to three minutes after the server is connected to ac power.

1. Remove any optional devices that were installed recently. System power problems caused by addition of a device indicates this device is either incompatible or too much for the power supply to support.
2. Make sure the power cord is securely connected to the server and to a working electrical outlet. Disconnect and reconnect or replace the server power cord.
3. Remove and reinstall the power supply. If the problem persists, replace the power supply.
4. Disconnect and reconnect the front panel cable (see “System board components” on page 18 for the location of the connector on the system board). If the problem persists, replace the front panel.

The server immediately displays the POST Event Viewer when it is turned on

Complete the following steps until the problem is solved.

1. Make sure that the server supports the processor.

   To view processor details, go to **Setup Utility** and select **Main → System Summary**.

   To determine if the processor is supported for the server, see https://serverproven.lenovo.com/.
2. (Trained technician only) Make sure that the processor is installed properly.
3. Replace the following components one at a time, in the order shown, and restart the server after each replacement.
   a. (Trained technician only) processor
   b. (Trained technician only) system board

Embedded hypervisor is not in the boot list

Complete the following steps until the problem is solved.

© Copyright Lenovo 2022, 2025

1. If the server has been installed, moved, or serviced recently, or if this is the first time the embedded hypervisor is being used, make sure that the device is connected properly and that there is no physical damage to the connectors.
2. See the documentation that comes with the optional embedded hypervisor device for setup and configuration information.
3. Make sure that software that is installed in the device works on another server to ensure that the device works properly.
4. Check https://serverproven.lenovo.com/ to validate that the embedded hypervisor device is supported by the server.
5. Make sure that the embedded hypervisor device is included in the list of available boot options. To view the list of boot sequences, go to **Setup Utility**, select **Startup → Boot Priority Order**.
6. Check http://datacentersupport.lenovo.com for any tech tips (service bulletins) related to the embedded hypervisor and the server.

Server cannot recognize a drive

Complete the following steps until the problem is solved.

1. Check the system event log and resolve any related problems. To view the system event log, go to **Setup Utility** and select **Security → System Event Log → View System Event Log**.
2. Make sure that:
   - The drive is supported by the server (see https://serverproven.lenovo.com/).
   - The drive is properly installed with signal and power cables properly connected.
3. Make sure the drive is enabled. Go to **Setup Utility** and select **Devices → ATA Drive Setup** to see if the drive in question is enabled. If not, enable it.
4. If the server comes with LXPM Lite, go to **Diagnostics → HDD test** to perform diagnostics on the drives. Replace the drive that is displayed as faulty. Otherwise, skip to the next step.
5. Remove the drives until the system reaches minimal drive requirement; then, add one drive and restart the server, and repeat the step if the problem does not recur. If the problem occurs after addition of a drive, replace it.

   See “Specifications” on page 3 for the minimal configuration for debugging.

Displayed system memory less than installed physical memory

Note: Each time you install or remove a DIMM, you must disconnect the server from the power source; then, wait 10 seconds before restarting the server.

Complete the following steps until the problem is solved.

1. Check the system event log and resolve any related problems. To view the system event log, go to **Setup Utility** and select **Security → System Event Log → View System Event Log**.
2. Make sure that:
   - The DIMMs are supported by the server (see https://serverproven.lenovo.com/).
   - The DIMMs are properly installed. Examine if there is any gap between the connector and the DIMM. Remove and install the DIMM if there is any.
3. If the server comes with Lenovo XClarity Provisioning Manager Lite, go to **Diagnostics → Memory test** to perform diagnostics on the DIMMs. Replace the DIMM that is displayed as faulty. Otherwise, skip to the next step.

4. Remove the DIMMs until the system reaches minimal memory requirement; then, add one DIMM and reboot the server, and repeat the step if the problem does not recur. If the problem occurs after addition of a DIMM, replace it.

   See “Specifications” on page 3 for the minimal configuration for debugging.

A Lenovo optional device that was just installed does not work.

Complete the following steps until the problem is solved.

1. Check the system event log and resolve any related problems. To view the system event log, go to **Setup Utility** and select **Security → System Event Log → View System Event Log**.
2. Make sure that:
   - The device is supported by the server (see https://serverproven.lenovo.com/).
   - The latest version of corresponding driver is installed.
   - The device is seated correctly without physical damage on the device or connector.
   - System firmware has been updated to the latest version.
   - You followed the installation instructions that came with the device, and the device is installed properly.
   - You have not loosened any other installed devices or cables.
3. Reseat the device.
4. Replace the device.

Voltage planar fault is displayed in the event log

Complete the following steps until the problem is solved.

1. Revert the system to the minimum configuration. See “Specifications” on page 3 for details.
2. Restart the server.
   - If the system does restart successfully, add the devices that are removed one at a time, and restart the server after each addition until the problem occurs. Replace the device that causes the problem.
   - If the system fails to restart, there might be a problem with the system board. Call Lenovo support.

Appendix A. Getting help and technical assistance

If you need help, service, or technical assistance or just want more information about Lenovo products, you will find a wide variety of sources available from Lenovo to assist you.

On the World Wide Web, up-to-date information about Lenovo systems, optional devices, services, and support are available at:

http://datacentersupport.lenovo.com

Note: IBM is Lenovo's preferred service provider for ThinkSystem.

Before you call

Before you call, there are several steps that you can take to try and solve the problem yourself. If you decide that you do need to call for assistance, gather the information that will be needed by the service technician to more quickly resolve your problem.

Attempt to resolve the problem yourself

You can solve many problems without outside assistance by following the troubleshooting procedures that Lenovo provides in the online help or in the Lenovo product documentation. The Lenovo product documentation also describes the diagnostic tests that you can perform. The documentation for most systems, operating systems, and programs contains troubleshooting procedures and explanations of error messages and error codes. If you suspect a software problem, see the documentation for the operating system or program.

You can find the product documentation for your ThinkSystem products at the following location:

http://thinksystem.lenovofiles.com/help/index.jsp

You can take these steps to try to solve the problem yourself:

- Check all cables to make sure that they are connected.
- Check the power switches to make sure that the system and any optional devices are turned on.
- Check for updated software, firmware, and operating-system device drivers for your Lenovo product. The Lenovo Warranty terms and conditions state that you, the owner of the Lenovo product, are responsible for maintaining and updating all software and firmware for the product (unless it is covered by an additional maintenance contract). Your service technician will request that you upgrade your software and firmware if the problem has a documented solution within a software upgrade.
- If you have installed new hardware or software in your environment, check https://serverproven.lenovo.com/ to make sure that the hardware and software is supported by your product.
- Go to http://datacentersupport.lenovo.com and check for information to help you solve the problem.
  - Check the Lenovo forums at https://forums.lenovo.com/t5/Datacenter-Systems/ct-p/sv_eg to see if someone else has encountered a similar problem.

You can solve many problems without outside assistance by following the troubleshooting procedures that Lenovo provides in the online help or in the Lenovo product documentation. The Lenovo product documentation also describes the diagnostic tests that you can perform. The documentation for most systems, operating systems, and programs contains troubleshooting procedures and explanations of error messages and error codes. If you suspect a software problem, see the documentation for the operating system or program.

© Copyright Lenovo 2022, 2025

Gathering information needed to call Support

If you believe that you require warranty service for your Lenovo product, the service technicians will be able to assist you more efficiently if you prepare before you call. You can also see http://datacentersupport.lenovo.com/warrantylookup for more information about your product warranty.

Gather the following information to provide to the service technician. This data will help the service technician quickly provide a solution to your problem and ensure that you receive the level of service for which you might have contracted.

- Hardware and Software Maintenance agreement contract numbers, if applicable
- Machine type number (Lenovo 4-digit machine identifier)
- Model number
- Serial number
- Current system UEFI and firmware levels
- Other pertinent information such as error messages and logs

As an alternative to calling Lenovo Support, you can go to https://support.lenovo.com/servicerequest to submit an Electronic Service Request. Submitting an Electronic Service Request will start the process of determining a solution to your problem by making the pertinent information available to the service technicians. The Lenovo service technicians can start working on your solution as soon as you have completed and submitted an Electronic Service Request.

Contacting Support

You can contact Support to obtain help for your issue.

You can receive hardware service through a Lenovo Authorized Service Provider. To locate a service provider authorized by Lenovo to provide warranty service, go to https://datacentersupport.lenovo.com/serviceprovider and use filter searching for different countries. For Lenovo support telephone numbers, see https://datacentersupport.lenovo.com/supportphonelist for your region support details.

Appendix B. Trademarks

Lenovo, the Lenovo logo, and ThinkSystem are trademarks of Lenovo in the United States, other countries, or both.

Intel and Xeon are trademarks of Intel Corporation in the United States, other countries, or both.

Microsoft and Windows are trademarks of the Microsoft group of companies.

Linux is a registered trademark of Linus Torvalds.

Other company, product, or service names may be trademarks or service marks of others.

© Copyright Lenovo 2022, 2025

Lenovo