ThinkSystem ST650 V2
Setup Guide

Machine Types: 7Z74 and 7Z75

Note

Before using this information and the product it supports, be sure to read and understand the safety information and the safety instructions, which are available at:
https://pubs.lenovo.com/safety_documentation/

In addition, be sure that you are familiar with the terms and conditions of the Lenovo warranty for your server, which can be found at:
http://datacentersupport.lenovo.com/warrantylookup

Fifteenth Edition (January 2025)

© Copyright Lenovo 2020, 2025.
LIMITED AND RESTRICTED RIGHTS NOTICE: If data or software is delivered pursuant to a General Services Administration (GSA) contract, use, reproduction, or disclosure is subject to restrictions set forth in Contract No. GS-35F-05925.

Contents

Contents i

Safety iii

Safety inspection checklist iv

Chapter 1. Introduction 1

Server package contents 1
Server form factor 1
Features. 1
Specifications 3
Particulate contamination 10
Management options. 11

Chapter 2. Server components 15

Front view 16
Front panel 21
Rear view 24
Rear view LEDs 26
External LCD diagnostics handset 27
System board components 33
System board LEDs 35
System board switches 36
Server locks 38
Backplates and backplanes 39
2.5-inch drive backplanes 39
3.5-inch drive backplanes 40
3.5-inch drive backplate. 41
Power distribution board connectors 41
Parts list. 42
Power cords 47

Chapter 3. Internal cable routing . . . 49

Backplane and backplate cable routing 50
Front panel cable routing 50
Front USB cable routing 51
GPU cable routing 52
Internal CFF RAID adapter cable routing 53
M.2 boot adapter cable routing 54
Optical drive cable routing. 55
PCIe slot 8 cable routing 55
Power distribution board cable routing 56
Tape drive cable routing 57

Chapter 4. Server hardware setup . . 59

Server setup checklist 59
Installation guidelines 60
Safety inspection checklist. 61
System reliability guidelines 62
Working inside the server with the power on . . 62
Handling static-sensitive devices 62
Memory module installation rules and order 63
Technical rules 63
Technical rules for GPU 63
Technical rules for memory modules 65
Technical rules for PCIe slots. 77
Technical rules for system fans 78
Install server hardware options 83
Install a hot-swap power supply 83
Remove the security door 86
Remove the server cover 87
Remove the front bezel 89
Remove a flash power module 90
Remove the air baffle 91
Remove an NVLink bridge 92
Remove a full-length GPU adapter 94
Remove a hot-swap fan 95
Remove the fan cage assembly 97
Remove an optical drive or a tape drive 98
Remove the 5.25-inch drive bay adapter assembly 99
Remove the optical drive cage 101
Remove the expansion drive cage 102
Install the expansion drive cage 103
Install the optical drive cage 104
Install an optical drive or a tape drive 105
Install the 5.25-inch drive bay adapter assembly 109
Install a 2.5-inch hot-swap drive backplane 111
Install a 3.5-inch hot-swap drive backplane 112
Install a 3.5-inch simple-swap drive backplate 113
Install a 2.5-inch drive into a 3.5-inch drive bay 115
Install a simple-swap drive 116
Install a hot-swap drive 118
Install the internal CFF adapter 119
Install a processor-heat-sink module 121
Install a memory module 124
Install the M.2 boot adapter 126
Adjust the retainer on the M.2 boot adapter 128
Install an M.2 drive 129

© Copyright Lenovo 2020, 2025

Install the intrusion switch 131
Install the fan cage assembly 132
Install a hot-swap fan 133
Install a PCIe adapter holder 134
Install an A2/L4 GPU air duct 136
Install a PCIe adapter 137
Install a full-length GPU adapter 138
Install an NVLink bridge 140
Install a GPU filler 142
Install a T4 filler 143
Install the air baffle 145
Install a flash power module 146
Install the front bezel 148
Install the security door 149
Install the server cover 150
Install the foot stands 152
Install the tower to rack conversion kit 154
Install the EIA brackets 154
Install the rail and latch covers 157
Cable the server 157
Power on the server 158
Validate server setup 158
Power off the server 158

Chapter 5. System configuration . . . 159

Set the network connection for the Lenovo XClarity Controller 159
Set front USB port for Lenovo XClarity Controller connection 160
Update the firmware 161
Configure the firmware 164
Memory configuration 165
Enable Software Guard Extensions (SGX) 165
RAID configuration 166
Deploy the operating system 166
Back up the server configuration 167
Update the Vital Product Data (VPD) 168
Update the Universal Unique Identifier (UUID) 168
Update the asset tag 169

Chapter 6. Resolving installation issues 173

Appendix A. Getting help and technical assistance 177

Before you call 177
Collecting service data 178
Contacting Support 179

Appendix B. Trademarks 181

Index 183

Safety

Before installing this product, read the Safety Information.

قبل تركيب هذا المنتج، يجب قراءة الملاحظات الآمنية

Antes de instalar este produto, leia as Informações de Segurança.

在安装本产品之前，请仔细阅读 Safety Information （安全信息）。

安裝本產品之前，請先閱讀「安全資訊」。

Prije instalacije ovog produkta obavezno pročitajte Sigurnosne Upute.

Před instalací tohoto produktu si přečtěte příručku bezpečnostních instrukcí.

Læs sikkerhedsforskrifterne, før du installerer dette produkt.

Lees voordat u dit product installeert eerst de veiligheidsvoorschriften.

Ennen kuin asennat tämän tuotteen, lue turvaohjeet kohdasta Safety Information.

Avant d'installer ce produit, lisez les consignes de sécurité.

Vor der Installation dieses Produkts die Sicherheitshinweise lesen.

Πριν εγκαταστήσετε το προϊόν αυτό, διαβάστε τις πληροφορίες ασφάλειας (safety information).

לפני שתתקינו מוצר זה, קראו את הוראות הבטיחות.

A termék telepítése előtt olvassa el a Biztonsági előírásokat!

Prima di installare questo prodotto, leggere le Informazioni sulla Sicurezza.

製品の設置の前に、安全情報をお読みください。

본 제품을 설치하기 전에 안전 정보를 읽으십시오.

Пред да се инсталира овој продукт, прочитајте информацијата за безбедност.

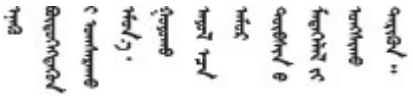

Les sikkerhetsinformasjonen (Safety Information) før du installerer dette produktet.

Przed zainstalowaniem tego produktu, należy zapoznać się z książką "Informacje dotyczące bezpieczeństwa" (Safety Information).

Antes de instalar este produto, leia as Informações sobre Segurança.

© Copyright Lenovo 2020, 2025

Перед установкой продукта прочтите инструкции по технике безопасности.

Pred inštaláciou tohto zariadenia si pečítaje Bezpečnostné predpisy.

Pred namestitvijo tega proizvoda preberite Varnostne informacije.

Antes de instalar este producto, lea la información de seguridad.

Läs säkerhetsinformationen innan du installerar den här produkten.

ཐོན་རྫས་འདི་བདེ་སྤྱོད་མ་བྱས་གོང་། ་སྐོར་གྱི་ཡིད་གཟབ་
བྱ་འདྲ་མིན་ཡོད་པའི་འོད་སྡེར་བལྟ་དགོས།

Bu ürünü kurmadan önce güvenlik bilgilerini okuyun.

مەزكۇر مەھسۇلاتنى ئورنىتىشتىن بۇرۇن بىخەتەرلىك ئۇچۇرلىرىنى ئوقۇپ چىقىڭ.

Youq mwngz yungh canjbinj neix gaxgonq, itdingh aeu doeg aen canjbinj soengq cungj vahgangj ancien siusik.

Safety inspection checklist

Use the information in this section to identify potentially unsafe conditions with your server. As each machine was designed and built, required safety items were installed to protect users and service technicians from injury.

Notes:

1. The product is not suitable for use at visual display workplaces according to §2 of the Workplace Regulations.
2. The set-up of the server is made in the server room only.

CAUTION:
This equipment must be installed or serviced by trained personnel, as defined by the NEC, IEC 62368-1 & IEC 60950-1, the standard for Safety of Electronic Equipment within the Field of Audio/Video, Information Technology and Communication Technology. Lenovo assumes you are qualified in the servicing of equipment and trained in recognizing hazards energy levels in products. Access to the equipment is by the use of a tool, lock and key, or other means of security, and is controlled by the authority responsible for the location.

Important: Electrical grounding of the server is required for operator safety and correct system function. Proper grounding of the electrical outlet can be verified by a certified electrician.

Use the following checklist to verify that there are no potentially unsafe conditions:

1. Make sure that the power is off and the power cord is disconnected.
2. Check the power cord.
   - Make sure that the third-wire ground connector is in good condition. Use a meter to measure third-wire ground continuity for 0.1 ohm or less between the external ground pin and the frame ground.
   - Make sure that the power cord is the correct type.

     To view the power cords that are available for the server:

     a. Go to:

http://dcsc.lenovo.com/#/

b. Click **Preconfigured Model** or **Configure to order**.

c. Enter the machine type and model for your server to display the configurator page.

d. Click **Power → Power Cables** to see all line cords.

- Make sure that the insulation is not frayed or worn.

3. Check for any obvious non-Lenovo alterations. Use good judgment as to the safety of any non-Lenovo alterations.
4. Check inside the server for any obvious unsafe conditions, such as metal filings, contamination, water or other liquid, or signs of fire or smoke damage.
5. Check for worn, frayed, or pinched cables.
6. Make sure that the power-supply cover fasteners (screws or rivets) have not been removed or tampered with.

© Copyright Lenovo 2020, 2025

Chapter 1. Introduction

The ThinkSystem ST650 V2 server is a 4U tower server designed for performance and expansion for various IT workloads. With the modular design, the server is flexible to be customized for maximum storage capacity or high storage density with selectable input/output options and tiered system management.

Performance, ease of use, reliability, and expansion capabilities were key considerations in the design of the server. These design features make it possible for you to customize the system hardware to meet your needs today and provide flexible expansion capabilities for the future.

The server comes with a limited warranty. For details about the warranty, see: https://support.lenovo.com/us/en/solutions/ht503310

For details about your specific warranty, see: http://datacentersupport.lenovo.com/warrantylookup

Server package contents

When you receive your server, verify that the shipment contains everything that you expected to receive.

The server package includes the following items:

Note: Some of the items listed are available on select models only.

- The server.
- Rail kit (optional). Detailed instructions for installing the rail kit are provided in the package with the rail kit.
- Material box, including items such as accessory kit and documentation.

Server form factor

The ThinkSystem ST650 V2 server is designed to support both tower and rack form factors.

You can change the server from tower form factor to rack form factor by installing the tower to rack conversion kit. For instructions on how to install the tower to rack conversion kit, refer to "Install the tower to rack conversion kit" on page 154.

Features

Performance, ease of use, reliability, and expansion capabilities were key considerations in the design of the server. These design features make it possible for you to customize the system hardware to meet your needs today and provide flexible expansion capabilities for the future.

Your server implements the following features and technologies:

- **Features on Demand**

  If a Features on Demand feature is integrated in the server or in an optional device that is installed in the server, you can purchase an activation key to activate the feature. For information about Features on Demand, see:

  https://fod.lenovo.com/lkms

- **Lenovo XClarity Controller (XCC)**

© Copyright Lenovo 2020, 2025

The Lenovo XClarity Controller is the common management controller for Lenovo ThinkSystem server hardware. The Lenovo XClarity Controller consolidates multiple management functions in a single chip on the server system board.

Some of the features that are unique to the Lenovo XClarity Controller are enhanced performance, higher-resolution remote video, and expanded security options. For additional information about the Lenovo XClarity Controller, refer to the XCC documentation compatible with your server at:

https://pubs.lenovo.com/lxcc-overview/

Important: Lenovo XClarity Controller (XCC) supported version varies by product. All versions of Lenovo XClarity Controller are referred to as Lenovo XClarity Controller and XCC in this document, unless specified otherwise. To see the XCC version supported by your server, go to https://pubs.lenovo.com/lxcc-overview/.

- **UEFI-compliant server firmware**

  Lenovo ThinkSystem firmware is Unified Extensible Firmware Interface (UEFI) compliant. UEFI replaces BIOS and defines a standard interface between the operating system, platform firmware, and external devices.

  Lenovo ThinkSystem servers are capable of booting UEFI-compliant operating systems, BIOS-based operating systems, and BIOS-based adapters as well as UEFI-compliant adapters.

  Note: The server does not support Disk Operating System (DOS).

- **Active Memory**

  The Active Memory feature improves the reliability of memory through memory mirroring. Memory mirroring mode replicates and stores data on two pairs of DIMMs within two channels simultaneously. If a failure occurs, the memory controller switches from the primary pair of memory DIMMs to the backup pair of DIMMs.

- **Large system-memory capacity**

  The server supports TruDDR4 registered DIMMs (RDIMMs) and Persistent Memory Modules (PMEM). For more information about the specific types and maximum amount of memory, see "Specifications" on page 3.

- **Integrated Trusted Platform Module (TPM)**

  This integrated security chip performs cryptographic functions and stores private and public secure keys. It provides the hardware support for the Trusted Computing Group (TCG) specification. You can download the software to support the TCG specification.

  Note: For customers in Chinese Mainland, TPM is not supported. However, customers in Chinese Mainland can install a TPM card (sometimes called a daughter card).

- **Large data-storage capacity and hot-swap capability**

  Some server models support a maximum of thirty-two 2.5-inch hot-swap drives, sixteen 3.5-inch hot-swap drives, or twelve 3.5-inch simple-swap drives.

  For server models supporting the hot-swap feature, you can add, remove, or replace drives without turning off the server.

- **Mobile access to Lenovo Service Information website**

  The server provides a QR code on the system service label, which is on the inside of the server cover, that you can scan the QR code with a mobile device and a QR code reader application to get quick access to the Lenovo Service Information website. The Lenovo Service Information web site provides additional information for parts installation, replacement videos, and error codes for server support.

- **Redundant networking connection**

The Lenovo XClarity Controller provides failover capability to a redundant Ethernet connection with the applicable application installed. If a problem occurs with the primary Ethernet connection, all Ethernet traffic that is associated with the primary connection is automatically switched to the optional redundant Ethernet connection. If the applicable device drivers are installed, this switching occurs without data loss and without user intervention.

- **Redundant cooling and power capabilities**

  The server supports up to four hot-swap fans and two hot-swap power supplies. The redundant cooling by the dual rotor fans in the server enables continued operation if one of the fans fails.

- **ThinkSystem RAID support**

  The ThinkSystem RAID adapter provides hardware redundant array of independent disks (RAID) support to create configurations. The standard RAID adapter provides RAID levels 0 and 1. An optional RAID adapter is available for purchase.

Specifications

Table 1. Specifications

Specification	Description
Dimension	4U server • Height: – Without foot stand: 448 mm (17.64 inches) – With foot stand: 461.4 mm (18.17 inches) • Width: – Without foot stand: 174.2 mm (6.86 inches) – With foot stand: 247.4 mm (9.74 inches) • Depth: – Without security door: 710.8 mm (27.98 inches) – With security door: 733.8 mm (28.89 inches)
Weight (depending on the configuration)	• 2.5-inch drive configuration: – Maximum: 39.28 kg (86.60 lb) • 3.5-inch drive configuration: – Maximum: 46.23 kg (101.92 lb)
Processor	Supports multi-core Intel Xeon processors, with integrated memory controller and Intel Mesh UPI (Ultra Path Interconnect) topology. • Supports up to two 250W processors • Designed for the LGA 4189 socket • Scalable up to 52 cores (with two processors installed) • Supports up to 4 UPI links at 11.2 GT/s **Notes:** • Only two-socket type CPUs are supported in two CPU configurations. • UPI function is only available when two or more processors are installed. For a list of supported processors, see: https://serverproven.lenovo.com/

Table 1. Specifications (continued)

Specification	Description

Memory	See "Memory module installation rules and order" on page 63 for detailed information about memory configuration and setup.
	
	• Minimum: 16 GB
	• Maximum:
	  – 2048 GB using registered DIMMs (RDIMMs)
	  – 3072 GB using registered DIMMs (RDIMMs) and Persistent Memory Modules (PMEM)
	• Slots: thirty-two DIMM slots
	• Supports:
	  – 16 GB, 32 GB, 64 GB TruDDR4 3200 MHz RDIMM
	  – 128 GB TruDDR4 3200 MHz 3DS RDIMM
	  – 128 GB Persistent Memory Modules (PMEM)
	
	For a list of supported memory modules, see:
	https://serverproven.lenovo.com/

Drive bays (varies by model)	Drive bays and drives supported by your server vary by model.
	• Storage drive bays:
	  – Server models with 3.5-inch simple-swap drive bays
	  – Supports up to twelve SATA drives
	  – Server models with 3.5-inch hot-swap drive bays
	  – Supports up to sixteen SAS/SATA drives
	  – Supports up to eight SAS/SATA drives and eight NVMe drives
	  – Server models with 2.5-inch hot-swap drive bays
	  – Supports up to thirty-two SAS/SATA drives
	  – Supports up to sixteen SAS/SATA drives and sixteen NVMe drives
	• Optical drive bays
	  – Two optical drive bays
	  – Supports up to one tape drive (RDX or LTO) and one optical disk drive
	
	Notes:
	• The server supports the installation of 2.5-inch SSDs in a 3.5 inch disk bay through the use of a conversion kit. See "Install a 2.5-inch drive into a 3.5-inch drive bay" on page 115 for details.
	• When A2/L4 GPU(s) are installed, up to four drive backplanes are supported.
	  When other types of GPUs are installed, only up to two backplanes or backplates are supported, and no optical drive or tape drive can be installed.
	  See "Technical rules for system fans" on page 78 for detailed information about the storage limitations in different server configurations..

M.2 drive	Supports up to two M.2 drives: • 42 mm (2242) • 60 mm (2260) • 80 mm (2280) • 110 mm (22110)

Table 1. Specifications (continued)

Specification	Description
Expansion slots	Nine PCIe expansion slots are available: • Slot 1: PCIe4 x16, 75W, Full-height, half-length • Slot 2: PCIe4 x8 (open end), 75W, Full-height, half-length • Slot 3: PCIe4 x16, 75W, Full-height, half-length • Slot 4: PCIe4 x8 (open end), 75W, Full-height, half-length • Slot 5: PCIe4 x16, 75W, Full-height, half-length • Slot 6: PCIe4 x8 (open end), 75W, Full-height, half-length • Slot 7: PCIe4 x16, 75W, Full-height, half-length • Slot 8: PCIe3 x8 (open end), 75W, Full-height, half-length (requires additional cable connection, see "PCIe slot 8 cable routing" on page 55) • Slot 9: PCIe4 x8 (open end), 75W, Full-height, half-length **Notes:** When Slot 8 is used: • Up to 6 NVMe drives can be supported in 3.5-inch configurations with two NVMe/AnyBay backplanes. • Up to 14 NVMe drives can be supported in 2.5-inch configurations with two NVMe/AnyBay backplanes. • 3.5-inch configurations with two NVMe/AnyBay backplanes and no NVMe Retimer Adapter or one NVMe Retimer Adapter is not supported. • 2.5-inch configurations with two NVMe/AnyBay backplanes and two NVMe Retimer Adapters or three NVMe Retimer Adapters are not supported.
Onboard NVMe connectors	Four onboard NVMe connectors are available: • PCIe 1: Gen3 • PCIe 2: Gen3 • PCIe 3: Gen4 • PCIe 4: Gen4 when connected to backplane, Gen3 when connected to PCIe slot 8 enable connector.
Input/Output (I/O) features	• Front panel – One USB 2.0 connector with Lenovo XClarity Controller management – One USB 3.2 Gen 1 connector • Rear panel – One External LCD diagnostics handset connector – Four USB 3.2 Gen 1 connectors – Two 10Gb Ethernet connectors – One VGA connector – One serial-port-module slot – One XClarity Controller network connector (RJ-45 Ethernet connector)
Network	• Two 10Gb ethernet connectors • One XClarity Controller network connector (RJ-45 Ethernet connector) **Note:** Use CAT6A UTP cables rated at 625 MHz bandwidth for the 10Gb on-board LAN.

Table 1. Specifications (continued)

Specification	Description
Storage controller	• Twelve onboard SATA ports (only the first 8 drives can be configured using Intel VROC SATA RAID) • Eight onboard NVMe ports (Intel VROC NVMe RAID) • NVMe Retimer Adapter (Intel VROC NVMe RAID) **Notes:** • ThinkSystem RAID 940-32i 8GB Flash PCIe Gen4 12Gb Adapter can only be installed in slot 9 in one CPU configurations, and installed in slot 9, 5, 6, 7, or 8 in two CPU configurations. • ThinkSystem RAID 540-8i PCIe Gen4 12Gb Adapter cannot be mixed with other RAID/HBA. • Onboard SATA 8-11 connector can only support ACHI mode when ThinkSystem M.2 NVMe 2-Bay RAID Enablement Kit or ThinkSystem M.2 SATA 2-Bay RAID Enablement Kit is installed. • Drives connected to SATA 6-7 (from onboard SATA 4-7 connector) cannot be used for bootable Windows system disk when in RAID mode. For a list of supported adapters, see: https://serverproven.lenovo.com/
Fans	Supports up to four hot-swap fans: • 9238 single-rotor hot-swap fans • 9256 dual-rotor hot-swap fans **Notes:** • Single-rotor hot-swap fans cannot be mixed with dual-rotor hot-swap fans. • When the system is power off but still plugged in to AC power, the fan in slot 4 may continue to spin at a much lower speed. This is the system design to provide proper cooling. • See "Technical rules for system fans" on page 78 for detailed information about fan configuration.

Table 1. Specifications (continued)

Specification	Description
Power supply	Supports up to two power supplies with N+N redundancy: • ThinkSystem 2400W (230V) v2 Platinum hot-swap power supply • ThinkSystem 1800W (230V) v2 Platinum hot-swap power supply • ThinkSystem 1800W (230V) v2 Titanium hot-swap power supply • ThinkSystem 1100W (230V/115V) v2 Platinum hot-swap power supply • ThinkSystem 1100W (230V) v2 Titanium hot-swap power supply • ThinkSystem 750W (230V) v2 Titanium hot-swap power supply • ThinkSystem 750W(230/115V) v2 Platinum hot-swap power supply **Notes:** • 100V+ is only allowed on the following: – 750W Platinum – 1100W Platinum • 200V+ is only allowed on the following: – 750W Platinum – 750W Titanium – 1100W Platinum – 1100W Titanium – 1800W Platinum – 1800W Titanium – 2400W Platinum **CAUTION:** • **240 V dc input (input range: 180-300 V dc) is ONLY supported in Chinese Mainland.** • **Power supplies with 240 V dc are not hot-swappable. To remove the power cord, ensure you have turned off the server or disconnected the dc power sources at the breaker panel.** • **In order for the ThinkSystem products to operate error free in both a DC or AC electrical environment, a TN-S earthing system which complies to 60364-1 IEC 2005 standard has to be present or installed.**
Minimal configuration for debugging	• One processor in processor socket 1 • One DRAM DIMM in DIMM slot 14 • One power supply in PSU slot 1 • One drive with RAID adapter and backplane or backplate (if OS is needed for debugging) • Three single rotor fans in fan slot 1, 2, and 4. • One fan filler in fan slot 3.

Table 1. Specifications (continued)

Specification	Description
Environment	The ThinkSystem ST650 V2 server complies with ASHRAE Class A2 specifications. Depending on the hardware configuration, some models comply with ASHRAE Class A3 and Class A4 specifications. System performance may be impacted when operating temperature is outside ASHRAE A2 specification. • Air temperature: – Operating – ASHRAE Class A2: 10°C to 35°C (50°F to 95°F); the maximum ambient temperature decreases by 1°C for every 300 m (984 ft) increase in altitude above 900 m (2,953 ft). – ASHRAE Class A3: 5°C to 40°C (41°F to 104°F); the maximum ambient temperature decreases by 1°C for every 175 m (574 ft) increase in altitude above 900 m (2,953 ft). – ASHRAE Class A4: 5°C to 45°C (41°F to 113°F); the maximum ambient temperature decreases by 1°C for every 125 m (410 ft) increase in altitude above 900 m (2,953 ft). – Server off: -10°C to 60°C (14°F to 140°F) – Shipment/storage: -40°C to 60°C (-40°F to 140°F) • Maximum altitude: 3,050 m (10,000 ft) • Relative Humidity (non-condensing): – Operating – ASHRAE Class A2: 8% to 80%; maximum dew point: 21°C (70°F) – ASHRAE Class A3: 8% to 85%; maximum dew point: 24°C (75°F) – ASHRAE Class A4: 8% to 90%; maximum dew point: 24°C (75°F) – Shipment/storage: 8% to 90% • Particulate contamination **Attention:** Airborne particulates and reactive gases acting alone or in combination with other environmental factors such as humidity or temperature might pose a risk to the server. For information about the limits for particulates and gases, see "Particulate contamination" in *ThinkSystem ST650 V2 Maintenance Manual*.
Acoustical noise emissions	The server has the following acoustic noise emissions declaration: • Sound power level (L_{WAd}) – Idling: – Min: 5.0 Bel – Typical: 5.6 Bel – GPU: 7.2 Bel – Operating: – Min: 5.6 Bel – Typical: 5.6 Bel – GPU: 8.5 Bel • Sound pressure level (L_{pAm}): – Idling: – Min: 37 dBA – Typical: 41 dBA – GPU: 57 dBA – Operating: – Min: 41 dBA – Typical: 41 dBA – GPU: 69 dBA **Notes:** • The fans will temporarily run at higher speeds on system boot due to processor power calibration. • These sound levels were measured in controlled acoustical environments according to procedures specified by ISO7779 and are reported in accordance with ISO 9296.

Table 1. Specifications (continued)

Specification	Description
	• The declared acoustic sound levels are based on the specified configurations, which may change slightly depending on configuration/conditions. – Min configuration: one 105W processor, four 16 GB DIMMs, two 480 GB SSD drives, two onboard 10GB LAN ports, one 750W power supply unit. – Typical configuration: two 125W processors, sixteen 32 GB DIMMs, eight SAS hard disk drives, one 530-8i RAID Adapter, two onboard 10GB LAN ports, two 750W power supply units. – GPU configuration: two 165W processors, thirty-two 64 GB DIMMs, eight SAS hard disk drives, one 930-8i RAID adapter, two onboard 10GB LAN ports, eight Nvidia Tesla T4 GPU adapters, two 1800W power supply units. • The declared acoustic noise levels may increase greatly, if high-power components are installed such as high-power NICs, high-power processors and GPUs. • Government regulations (such as those prescribed by OSHA or European Community Directives) may govern noise level exposure in the workplace and may apply to you and your server installation. The actual sound pressure levels in your installation depend upon a variety of factors, including the number of racks in the installation; the size, materials, and configuration of the room; the noise levels from other equipment; the room ambient temperature, and employee's location in relation to the equipment. Further, compliance with such government regulations depends on a variety of additional factors, including the duration of employees' exposure and whether employees wear hearing protection. Lenovo recommends that you consult with qualified experts in this field to determine whether you are in compliance with the applicable regulations.
Ambient temperature management	Adjust ambient temperature when specific components are installed: **Note:** Ensure to observe the fan installation rules and sequence in "Technical rules for system fans" on page 78. • Keep ambient temperature to **30°C** or lower when one or more of the following components are installed. – Processors with 205 to 250 watts – Thirty-two registered DIMMs (RDIMMs) with 128 GB or less – GPU adapter • Keep ambient temperature to **35°C** or lower when one or more of the following components are installed. – Processors with 165 to 195 watts – Thirty-two registered DIMMs (RDIMMs) with 64 GB or less – Persistent Memory Modules (PMEM) – Retimer – ThinkSystem Mellanox ConnectX series adapter – Fibre Channel adapter – NVMe drive – RAID/HBA adapter – External NIC adapter – M.2 NVMe drive • Keep ambient temperature to **40°C** or lower when one or more of the following components are installed. – Processors with 135 to 150 watts • Keep ambient temperature to 45°C or lower when one or more of the following components are installed. – Processors with 120 watts or less – Thirty-two registered DIMMs (RDIMMs) with 32 GB or less – Two backplanes/backplates

Table 1. Specifications (continued)

Specification	Description
Operating systems	Supported and certified operating systems: • Microsoft Windows Server • VMware ESXi • Red Hat Enterprise Linux • SUSE Linux Enterprise Server References: • Complete list of available operating systems: https://lenovopress.lenovo.com/osig. • OS deployment instructions: "Deploy the operating system" on page 166.

Particulate contamination

Attention: Airborne particulates (including metal flakes or particles) and reactive gases acting alone or in combination with other environmental factors such as humidity or temperature might pose a risk to the device that is described in this document.

Risks that are posed by the presence of excessive particulate levels or concentrations of harmful gases include damage that might cause the device to malfunction or cease functioning altogether. This specification sets forth limits for particulates and gases that are intended to avoid such damage. The limits must not be viewed or used as definitive limits, because numerous other factors, such as temperature or moisture content of the air, can influence the impact of particulates or environmental corrosives and gaseous contaminant transfer. In the absence of specific limits that are set forth in this document, you must implement practices that maintain particulate and gas levels that are consistent with the protection of human health and safety. If Lenovo determines that the levels of particulates or gases in your environment have caused damage to the device, Lenovo may condition provision of repair or replacement of devices or parts on implementation of appropriate remedial measures to mitigate such environmental contamination. Implementation of such remedial measures is a customer responsibility.

Table 2. Limits for particulates and gases

Contaminant	Limits
Reactive gases	Severity level G1 as per ANSI/ISA 71.04-1985[1]: • The copper reactivity level shall be less than 200 Angstroms per month (Å/month ≈ 0.0035 µg/cm^2-hour weight gain).[2] • The silver reactivity level shall be less than 200 Angstroms per month (Å/month ≈ 0.0035 µg/cm^2-hour weight gain).[3] • The reactive monitoring of gaseous corrosivity must be conducted approximately 5 cm (2 in.) in front of the rack on the air inlet side at one-quarter and three-quarter frame height off the floor or where the air velocity is much higher.
Airborne particulates	Data centers must meet the cleanliness level of ISO 14644-1 class 8. For data centers without airside economizer, the ISO 14644-1 class 8 cleanliness might be met by choosing one of the following filtration methods: • The room air might be continuously filtered with MERV 8 filters. • Air entering a data center might be filtered with MERV 11 or preferably MERV 13 filters. For data centers with airside economizers, the choice of filters to achieve ISO class 8 cleanliness depends on the specific conditions present at that data center. • The deliquescent relative humidity of the particulate contamination should be more than 60% RH.[4] • Data centers must be free of zinc whiskers.[5]

[1] ANSI/ISA-71.04-1985. *Environmental conditions for process measurement and control systems: Airborne contaminants*. Instrument Society of America, Research Triangle Park, North Carolina, U.S.A.

[2] The derivation of the equivalence between the rate of copper corrosion growth in the thickness of the corrosion product in Å/month and the rate of weight gain assumes that Cu_2S and Cu_2O grow in equal proportions.

[3] The derivation of the equivalence between the rate of silver corrosion growth in the thickness of the corrosion product in Å/month and the rate of weight gain assumes that Ag_2S is the only corrosion product.

[4] The deliquescent relative humidity of particulate contamination is the relative humidity at which the dust absorbs enough water to become wet and promote ionic conduction.

[5] Surface debris is randomly collected from 10 areas of the data center on a 1.5 cm diameter disk of sticky electrically conductive tape on a metal stub. If examination of the sticky tape in a scanning electron microscope reveals no zinc whiskers, the data center is considered free of zinc whiskers.

Management options

The XClarity portfolio and other system management options described in this section are available to help you manage the servers more conveniently and efficiently.

Overview

Options	Description
Lenovo XClarity Controller	Baseboard management controller. (BMC) Consolidates the service processor functionality, Super I/O, video controller, and remote presence capabilities into a single chip on the server system board. **Interface** • CLI application • Web GUI interface • Mobile application • REST API **Usage and downloads** https://pubs.lenovo.com/lxcc-overview/
Lenovo XClarity Administrator	Centralized interface for multi-server management. **Interface** • Web GUI interface • Mobile application • REST API **Usage and downloads** http://sysmgt.lenovofiles.com/help/topic/com.lenovo.lxca.doc/aug_product_page.html
Lenovo XClarity Essentials toolset	Portable and light toolset for server configuration, data collection, and firmware updates. Suitable both for single-server or multi-server management contexts. **Interface** • **OneCLI**: CLI application • **Bootable Media Creator**: CLI application, GUI application • **UpdateXpress**: GUI application **Usage and downloads** https://pubs.lenovo.com/lxce-overview/

Options	Description
Lenovo XClarity Provisioning Manager	UEFI-based embedded GUI tool on a single server that can simplify management tasks. **Interface** • Web interface (BMC remote access) • GUI application **Usage and downloads** https://pubs.lenovo.com/lxpm-overview/ **Important:** Lenovo XClarity Provisioning Manager (LXPM) supported version varies by product. All versions of Lenovo XClarity Provisioning Manager are referred to as Lenovo XClarity Provisioning Manager and LXPM in this document, unless specified otherwise. To see the LXPM version supported by your server, go to https://pubs.lenovo.com/lxpm-overview/.
Lenovo XClarity Integrator	Series of applications that integrate the management and monitoring functionalities of the Lenovo physical servers with the software used in a certain deployment infrastructure, such as VMware vCenter, Microsoft Admin Center, or Microsoft System Center while delivering additional workload resiliency. **Interface** GUI application **Usage and downloads** https://pubs.lenovo.com/lxci-overview/
Lenovo XClarity Energy Manager	Application that can manage and monitor server power and temperature. **Interface** • Web GUI Interface **Usage and downloads** https://datacentersupport.lenovo.com/solutions/lnvo-lxem
Lenovo Capacity Planner	Application that supports power consumption planning for a server or rack. **Interface** • Web GUI Interface **Usage and downloads** https://datacentersupport.lenovo.com/solutions/lnvo-lcp

Functions

Options		Functions							
		Multi-system mgmt	OS deploy-ment	System configu-ration	Firm-ware up-dates[1]	Event-s/alert moni-toring	Inven-tory/ logs	Pow-er mgmt	Power planning
Lenovo XClarity Controller				√	√[2]	√	√[4]		
Lenovo XClarity Administrator		√	√	√	√[2]	√	√[4]		
Lenovo XClarity Essen-tials toolset	OneCLI	√		√	√[2]	√	√[4]		
	Bootable Media Creator			√	√[2]		√[4]		
	UpdateXpress			√	√[2]				
Lenovo XClarity Provisioning Manager			√	√	√[3]		√[5]		
Lenovo XClarity Integrator		√	√[6]	√	√	√	√	√[7]	
Lenovo XClarity Energy Manager		√				√		√	
Lenovo Capacity Planner									√[8]

Notes:

1. Most options can be updated through the Lenovo tools. Some options, such as GPU firmware or Omni-Path firmware require the use of supplier tools.
2. The server UEFI settings for option ROM must be set to **Auto** or **UEFI** to update firmware using Lenovo XClarity Administrator, Lenovo XClarity Essentials, or Lenovo XClarity Controller.
3. Firmware updates are limited to Lenovo XClarity Provisioning Manager, Lenovo XClarity Controller, and UEFI updates only. Firmware updates for optional devices, such as adapters, are not supported.
4. The server UEFI settings for option ROM must be set to **Auto** or **UEFI** for detailed adapter card information, such as model name and firmware levels, to be displayed in Lenovo XClarity Administrator, Lenovo XClarity Controller, or Lenovo XClarity Essentials.
5. Limited inventory.
6. The Lenovo XClarity Integrator deployment check for System Center Configuration Manager (SCCM) supports Windows operating system deployment.
7. Power management function is supported only by Lenovo XClarity Integrator for VMware vCenter.
8. It is highly recommended that you check the power summary data for your server using Lenovo Capacity Planner before purchasing any new parts.

Chapter 2. Server components

This section provides information that helps locate the server components.

Identifying your server

When you contact Lenovo for help, the machine type and serial number information help support technicians to identify your server and provide faster service.

The machine type and serial number are on the ID label on the front of the server.

The following illustration shows the location of the ID label.

Note: The illustrations in this document might differ slightly from your server.

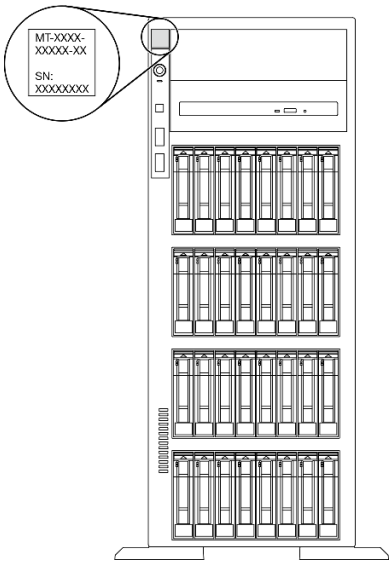

Figure 1. Location of the ID label

XClarity Controller network access label

The XClarity Controller network access label is attached on the front bezel. After you get the server, peel the XClarity Controller network access label away and store it in a safe place for future use.

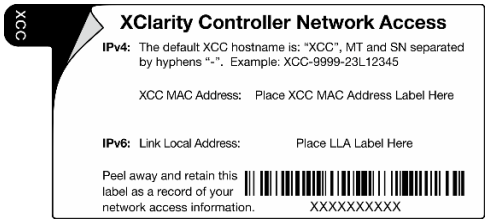

Figure 2. XClarity Controller network access label

© Copyright Lenovo 2020, 2025

Quick response code

The system service label on the inside of the server cover provides a QR code for mobile access to service information. You can scan the QR code with a mobile device for quick access to additional information including parts installation, replacement, and error codes.

The following illustration shows the QR code.

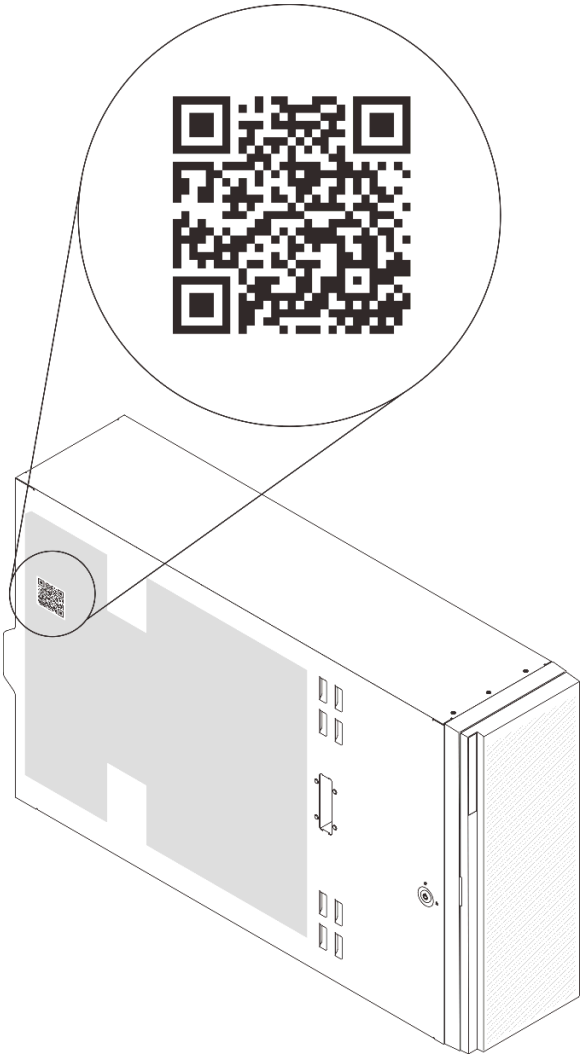

Figure 3. Location of QR code

Front view

The front view of the server varies by model.

The illustrations in this topic show the server front views based on the supported drive bays.

Note: Your server might look different from the illustrations in this topic.

Server models with twelve 3.5-inch simple-swap drive bays

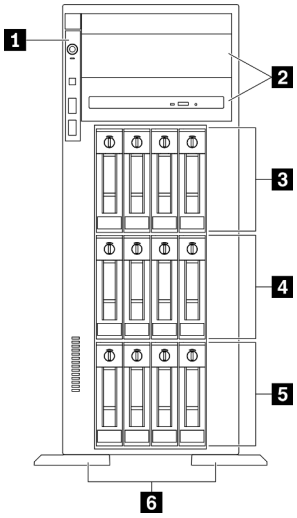

Figure 4. Front view of server models with twelve 3.5-inch simple-swap drive bays

Table 3. Components on server models with twelve 3.5-inch simple-swap drive bays

1 Front panel	4 3.5-inch simple-swap drive bays 4-7
2 Optical-drive bays 1-2	5 3.5-inch simple-swap drive bays 0-3
3 3.5-inch simple-swap drive bays 8-11	6 Foot stands

1 Front panel

For information about the controls, connectors, and status LEDs on the front panel, see "Front panel" on page 21.

2 Optical-drive bays 1-2

Depending on the model, your server might come with an optical drive installed in the lower 5.25-inch optical-drive bay. The upper 5.25-inch optical-drive bay is for a secondary optical drive or a tape drive. Some models have a secondary optical drive or a tape drive installed.

3 4 5 3.5-inch simple-swap drive bays

The drive bays are used to install 3.5-inch simple-swap drives. When you install drives, follow the order of the drive bay numbers. The EMI integrity and cooling of the server are protected by having all drive bays occupied. The vacant drive bays must be occupied by drive bay fillers or drive fillers.

6 Foot stands

For tower form factor models, the foot stands help the server stand steadily.

Server models with twelve 3.5-inch hot-swap drive bays

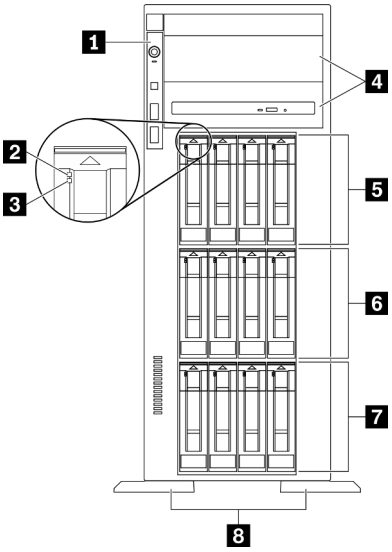

Figure 5. Front view of server models with twelve 3.5-inch hot-swap drive bays

Table 4. Components on server models with twelve 3.5-inch hot-swap drive bays

1 Front panel	5 3.5-inch hot-swap drive bays 8-11
2 Drive activity LED (green)	6 3.5-inch hot-swap drive bays 4-7
3 Drive status LED (yellow)	7 3.5-inch hot-swap drive bays 0-3
4 Optical-drive bays 1-2	8 Foot stands

1 Front panel

For information about the controls, connectors, and status LEDs on the front panel, see "Front panel" on page 21.

2 Drive activity LED (green)

Each hot-swap drive comes with an activity LED. When this LED is flashing, it indicates that the drive is in use.

3 Drive status LED (yellow)

These LEDs are on SAS or SATA hard disk drives and solid-state drives, and indicate the following status:

Lit: The drive has failed.

Flashing slowly (once per second): The drive is being rebuilt.

Flashing rapidly (three times per second): The drive is being identified.

4 Optical-drive bays 1-2

Depending on the model, your server might come with an optical drive installed in the lower 5.25-inch optical-drive bay. The upper 5.25-inch optical-drive bay is for a secondary optical drive or a tape drive. Some models have a secondary optical drive or a tape drive installed.

5 6 7 3.5-inch hot-swap drive bays

The drive bays are used to install 3.5-inch hot-swap drives. When you install drives, follow the order of the drive bay numbers. The EMI integrity and cooling of the server are protected by having all drive bays occupied. The vacant drive bays must be occupied by drive bay fillers or drive fillers.

Note: For 3.5-inch drive bay models that support NVMe drives, you can install up to eight NVMe drives in bays 0-3 and 4-7.

8 Foot stands

For tower form factor models, the foot stands help the server stand steadily.

Server models with sixteen 3.5-inch hot-swap drive bays

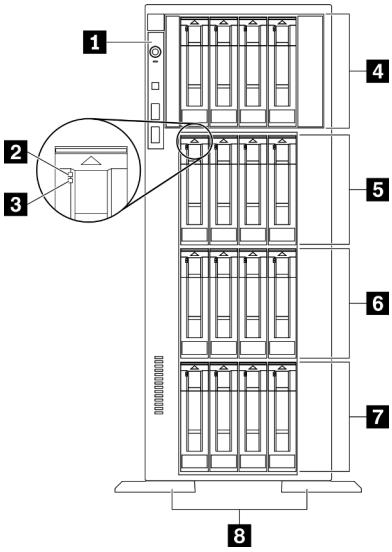

Figure 6. Front view of server models with sixteen 3.5-inch hot-swap drive bays

Table 5. Components on server models with sixteen 3.5-inch hot-swap drive bays

1 Front panel	5 3.5-inch hot-swap drive bays 8-11
2 Drive activity LED (green)	6 3.5-inch hot-swap drive bays 4-7
3 Drive status LED (yellow)	7 3.5-inch hot-swap drive bays 0-3
4 3.5-inch hot-swap drive bays 12-15	8 Foot stands

1 Front panel

For information about the controls, connectors, and status LEDs on the front panel, see "Front panel" on page 21.

2 Drive activity LED (green)

Each hot-swap drive comes with an activity LED. When this LED is flashing, it indicates that the drive is in use.

3 Drive status LED (yellow)

These LEDs are on SAS or SATA hard disk drives and solid-state drives, and indicate the following status:

Lit: The drive has failed.

Flashing slowly (once per second): The drive is being rebuilt.

Flashing rapidly (three times per second): The drive is being identified.

4 5 6 7 3.5-inch hot-swap drive bays

The drive bays are used to install 3.5-inch hot-swap drives. When you install drives, follow the order of the drive bay numbers. The EMI integrity and cooling of the server are protected by having all drive bays occupied. The vacant drive bays must be occupied by drive bay fillers or drive fillers.

Note: For 3.5-inch drive bay models that support NVMe drives, you can install up to eight NVMe drives in bays 0-3 and 4-7.

8 Foot stands

For tower form factor models, the foot stands help the server stand steadily.

Server models with thirty-two 2.5-inch drive bays

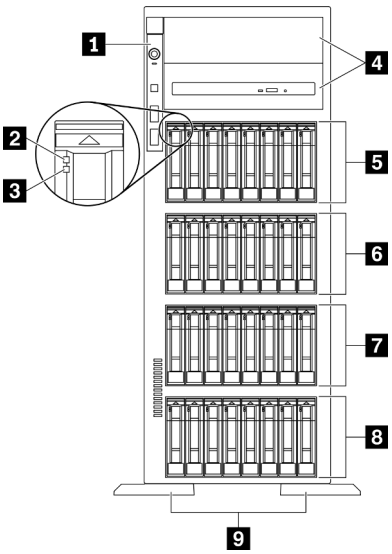

Figure 7. Front view of server models with thirty-two 2.5-inch drive bays

Table 6. Components on server models with thirty-two 2.5-inch drive bays

1 Front panel	6 2.5-inch hot-swap dive bays 16-23
2 Drive activity LED (green)	7 2.5-inch hot-swap drive bays 8-15
3 Drive status LED (yellow)	8 2.5-inch hot-swap drive bays 0-7
4 Optical-drive bays 1-2	9 Foot stands
5 2.5-inch hot-swap drive bays 24-31	

1 Front panel

For information about the controls, connectors, and status LEDs on the front panel, see "Front panel" on page 21.

2 Drive activity LED (green)

Each hot-swap drive comes with an activity LED. When this LED is flashing, it indicates that the drive is in use.

3 Drive status LED (yellow)

These LEDs are on SAS or SATA hard disk drives and solid-state drives, and indicate the following status:

Lit: The drive has failed.

Flashing slowly (once per second): The drive is being rebuilt.

Flashing rapidly (three times per second): The drive is being identified.

4 Optical-drive bays 1-2

Depending on the model, your server might come with an optical drive installed in the lower 5.25-inch optical-drive bay. The upper 5.25-inch optical-drive bay is for a secondary optical drive or a tape drive. Some models have a secondary optical drive or a tape drive installed.

5 6 7 8 2.5-inch hot-swap drive bays

The drive bays are used to install 2.5-inch hot-swap drives. When you install drives, follow the order of the drive bay numbers. The EMI integrity and cooling of the server are protected by having all drive bays occupied. The vacant drive bays must be occupied by drive bay fillers or drive fillers.

Note: For 2.5-inch drive bay models that support NVMe drives, you can install up to sixteen NVMe drives in bays 0-7 and 8-15.

9 Foot stands

For tower form factor models, the foot stands help the server stand steadily.

Front panel

The front panel of the server provides controls, connectors, and LEDs.

The following illustration shows the control, connectors, and LEDs on the front panel of the server.

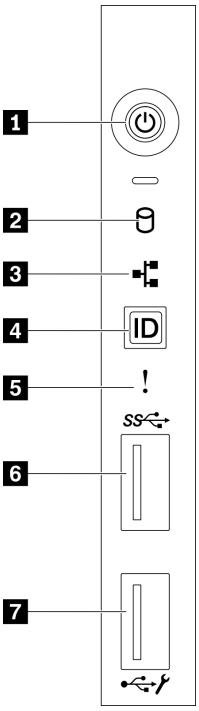

Figure 8. Front panel

Table 7. Components on the front panel

1 Power button with power status LED (green)	5 System error LED (yellow)
2 Simple-swap drive activity LED (green)	6 USB 3.2 Gen 1 connector
3 Network activity LED (green)	7 USB 2.0 connector with Lenovo XClarity Controller management
4 System ID button with system ID LED (blue)	

1 Power button with power status LED (green)

Press this button to turn the server on and off manually. The states of the power LED are as follows:

Off: No power supply is properly installed, or the LED itself has failed.

Flashing rapidly (four times per second): The server is turned off and is not ready to be turned on. The power-control button is disabled. This will last approximately 5 to 10 seconds.

Flashing slowly (once per second): The server is turned off and is ready to be turned on. You can press the power-control button to turn on the server.

Lit: The server is turned on.

2 Simple-swap drive activity LED (green)

The simple-swap drive activity LED is only for server models with simple-swap storage drives.

Status	Color	Description
Solid on	Green	The simple-swap drive is active.
Off	None	The simple-swap drive is not active.

3 Network activity LED (green)

The network activity LED on the front panel helps you identify the network connectivity and activity.

Status	Color	Description
On	Green	The server is connected to a network.
Blinking	Green	The network is connected and active.
Off	None	The server is disconnected from the network.

4 System ID button with system ID LED (blue)

Use this system ID button and the blue system ID LED to visually locate the server. A system ID LED is also located on the rear of the server. Each time you press the system ID button, the state of both the system ID LEDs changes. The LEDs can be changed to on, blinking, or off. You can also use the Lenovo XClarity Controller or a remote management program to change the state of the system ID LEDs to assist in visually locating the server among other servers.

If the XClarity Controller USB connector is set to have both the USB 2.0 function and XClarity Controller management function, you can press the system ID button for three seconds to switch between the two functions.

5 System error LED (yellow)

The system error LED provides basic diagnostic functions for your server.

Status	Color	Description	Action
On	Yellow	An error has been detected on the server. Causes might include one or more of the following errors: • The temperature of the server reached the non-critical temperature threshold. • The voltage of the server reached the non-critical voltage threshold. • A fan has been detected to be running at low speed. • A fan has been removed. • The power supply has a critical error. • The power supply is not connected to the power.	Check the event log to determine the exact cause of the error.
Off	None	The server is off or the server is on and is working correctly.	None.

6 USB 3.2 Gen 1 connector

Used to attach a device that requires a USB 2.0 or 3.2 Gen 1 connection, such as a keyboard, a mouse, or a USB flash drive.

7 USB 2.0 connector with Lenovo XClarity Controller management

Depending on the setting, this connector supports USB 2.0 function, XClarity Controller management function, or both.

- If the connector is set for USB 2.0 function, you can attach a device that requires a USB 2.0 connection, such as a keyboard, a mouse, or a USB storage device.
- If the connector is set for XClarity Controller management function, you can attach a mobile device installed with the application to run XClarity Controller event logs.
- If the connector is set to have both functions, you can press the system ID button for three seconds to switch between the two functions.

Rear view

The rear of the server provides access to several connectors and components.

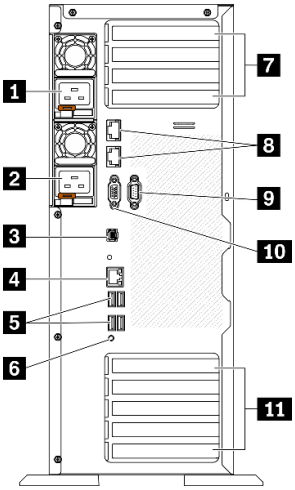

Figure 9. Rear view

Table 8. Rear view

1 Hot-swap power supply 1	7 PCIe slots 1-4 (top to bottom)
2 Hot-swap power supply 2 (optional)	8 10Gb ethernet connectors (2)
3 External LCD diagnostics handset connector	9 Serial-port-module slot
4 XClarity Controller network connector	10 VGA connector
5 Four USB 3.2 Gen 1 connectors (4)	11 PCIe slots 5-9 (top to bottom)
6 NMI button	

1 2 Hot-swap power supplies

Install power supply units to these bays, connect them to power cords. Make sure the power cords are connected properly.

You can purchase a power supply option from Lenovo and install the power supply to provide power redundancy without turning off the server.

On each power supply, there are three status LEDs near the power cord connector. For information about the status LEDs, see "Rear view LEDs" on page 26.

3 External LCD diagnostics handset connector

Connect the external LCD diagnostics handset here. See "External LCD diagnostics handset" on page 27 for more details.

4 XClarity Controller network connector

Used to attach an Ethernet cable to manage the system using XClarity Controller.

5 USB 3.2 Gen 1 connectors

Used to attach a device that requires a USB 2.0 or 3.2 Gen 1 connection, such as a keyboard, a mouse, or a USB flash drive.

6 NMI button

Press this button to force a nonmaskable interrupt to the processor. You might have to use a pen or the end of a straightened paper clip to press the button. You can also use it to force a blue-screen memory dump. Use this button only when you are directed to do so by Lenovo Support.

7 PCIe slots 1-4 (top to bottom)

Install PCIe adapters into these slots.

- Slot 1: PCIe4 x16, 75W, Full-height, half-length
- Slot 2: PCIe4 x8 (open end), 75W, Full-height, half-length
- Slot 3: PCIe4 x16, 75W, Full-height, half-length
- Slot 4: PCIe4 x8 (open end), 75W, Full-height, half-length

8 10Gb Ethernet connector

Used to attach a 10Gb Ethernet cable. Each 10Gb Ethernet connector has two status LEDs to help you identify the Ethernet connectivity and activity. For more information, see "Rear view LEDs" on page 26.

Note: Use CAT6A UTP cables rated at 625 MHz bandwidth for the 10Gb on-board LAN.

9 Serial-port-module slot

Connect a 9-pin serial device to this connector. The serial port is shared with the XCC. The XCC can take control of the shared serial port to redirect serial traffic, using Serial over LAN (SOL).

10 VGA connector

Used to attach a VGA-compatible video device, such as a VGA monitor.

11 PCIe slots 5-9 (top to bottom)

Install PCIe adapters into these slots.

- Slot 5: PCIe4 x16, 75W, Full-height, half-length
- Slot 6: PCIe4 x8 (open end), 75W, Full-height, half-length
- Slot 7: PCIe4 x16, 75W, Full-height, half-length
- Slot 8: PCIe3 x8 (open end), 75W, Full-height, half-length (requires additional cable connection, see "PCIe slot 8 cable routing" on page 55)
- Slot 9: PCIe4 x8 (open end), 75W, Full-height, half-length

Rear view LEDs

The illustration in this section shows the LEDs on the rear the server.

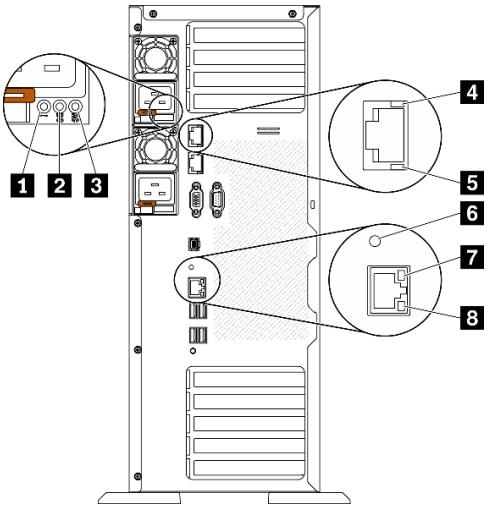

Figure 10. Rear view LEDs of the server

Table 9. LEDs on the rear of the server

1 Power supply error LED (yellow)	5 10Gb ethernet activity LED (green)
2 DC power LED (green)	6 System ID LED (blue)
3 AC power LED (green)	7 Ethernet link LED (green)
4 10Gb ethernet link LED (green)	8 Ethernet activity LED (green)

1 Power supply error LED (yellow)

When the power-supply error LED is lit, it indicates that the power supply has failed.

2 DC power LED (green)

Each hot-swap power supply comes with a dc power LED and an ac power LED. When the dc power LED is lit, it indicates that the power supply is supplying adequate dc power to the system. During normal operation, both the ac and dc power LEDs are lit.

3 AC power LED (green)

Each hot-swap power supply comes with an ac power LED and a dc power LED. When the ac power LED is lit, it indicates that sufficient power is being supplied to the power supply through the power cord. During normal operation, both the ac and dc power LEDs are lit.

4 10Gb ethernet link LED (green) 5 10Gb ethernet activity LED (green)

Each 10Gb ethernet connector has two status LEDs.

Ethernet status LED	Color	Status	Description
4 Ethernet link LED	Green	On	Network link is established.
	None	Off	Network link is disconnected.
5 Ethernet activity LED	Green	Blinking	Network link is connected and active.
	None	Off	The server is disconnected from a LAN.

6 System ID LED (blue)

Use this blue system ID LED to visually locate the server. A system ID LED is also located on the front of the server. Each time you press the system ID button on the front panel, the state of both the system ID LEDs changes. The LEDs can be changed to on, blinking, or off. You can also use the Lenovo XClarity Controller or a remote management program to change the state of the system ID LEDs to assist in visually locating the server among other servers.

If the XClarity Controller USB connector is set to have both the USB 2.0 function and XClarity Controller management function, you can press the system ID button for three seconds to switch between the two functions.

7 Ethernet link LED (green) 8 Ethernet activity LED (green)

Each network connector has two status LEDs.

Ethernet status LED	Color	Status	Description
7 Ethernet link LED	Green	On	Network link is established.
	None	Off	Network link is disconnected.
8 Ethernet activity LED	Green	Blinking	Network link is connected and active.
	None	Off	The server is disconnected from a LAN.

External LCD diagnostics handset

The external LCD diagnostics handset is an external device that is connected to the server with a cable, and it allows quick access to system information such as errors, system status, firmware, network, and health information.

Location of the external LCD diagnostics handset

Location	Callouts
The external LCD diagnostics handset is connected to the server with an external cable. 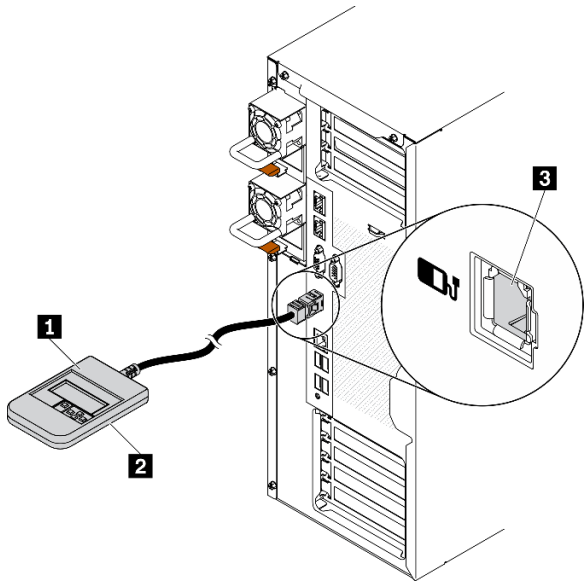 	1 External LCD diagnostics handset 2 Magnetic bottom With this component, the diagnostic handset can be attached to the top or side of the rack or chassis with hands spared for service tasks. 3 External diagnostics connector This connector is located on the rear of the server, and is used to connect an external LCD diagnostics handset.

Note: When unplugging the external handset, see the following instructions:

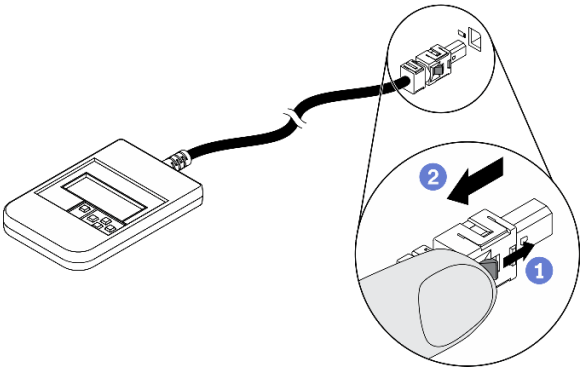

1. Press the plastic clip on the plug forward.
2. Hold the clip and remove the cable from the connector.

Display panel overview

The diagnostics device consists of an LCD display and 5 navigation buttons.

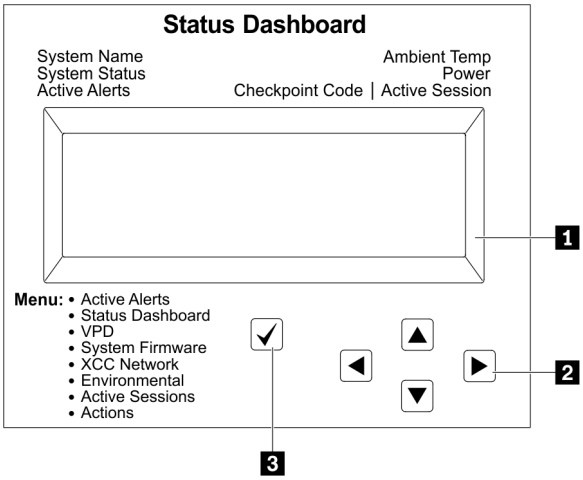

	1 LCD display
	2 Scroll buttons (up/down/left/right) Press the scroll buttons to locate and select system information.
	3 Select button Press the select button to select from the options in the menu.

Option flow diagram

The external LCD diagnostics handset displays various system information. Navigate through the options with the scroll keys.

Depending on the model, the options and entries on the LCD display might be different.

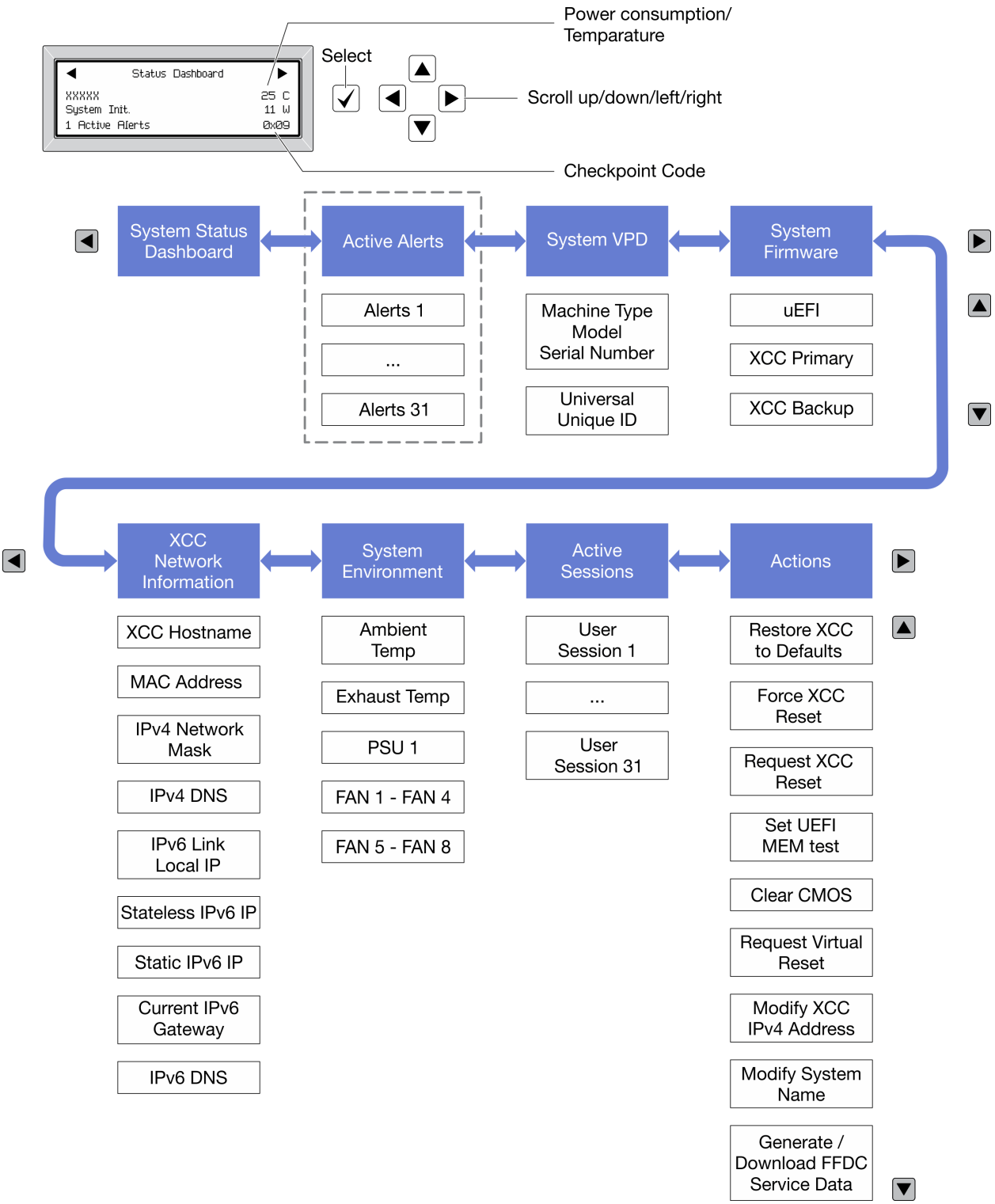

Full menu list

Following is the list of available options. Switch between an option and the subordinate information entries with the select button, and switch among options or information entries with the scroll buttons.

Depending on the model, the options and entries on the LCD display might be different.

Home Menu (System Status Dashboard)

Home Menu	Example
1 System name 2 System status 3 Active alert quantity 4 Temperature 5 Power consumption 6 Checkpoint code	

Active Alerts

Sub Menu	Example
Home screen: Active error quantity **Note:** The “Active Alerts” menu displays only the quantity of active errors. If no errors occur, the “Active Alerts” menu will not be available during navigation.	1 Active Alerts
Details screen: • Error message ID (Type: Error/Warning/Information) • Occurrence time • Possible sources of the error	Active Alerts: 1 Press ▼ to view alert details FQXSPPU009N(Error) 04/07/2020 02:37:39 PM CPU 1 Status: Configuration Error

System VPD Information

Sub Menu	Example
• Machine type and serial number • Universal Unique ID (UUID)	Machine Type: xxxx Serial Num: xxxxxx Universal Unique ID: xxxxxxxxxxxxxxxxxxxxxxxxxxxx

System Firmware

Sub Menu	Example
UEFI • Firmware level (status) • Build ID • Version number • Release date	UEFI (Inactive) Build: D0E101P Version: 1.00 Date: 2019-12-26
XCC Primary • Firmware level (status) • Build ID • Version number • Release date	XCC Primary (Active) Build: DVI399T Version: 4.07 Date: 2020-04-07
XCC Backup • Firmware level (status) • Build ID • Version number • Release date	XCC Backup (Active) Build: D8BT05I Version: 1.00 Date: 2019-12-30

XCC Network Information

Sub Menu	Example
• XCC hostname • MAC address • IPv4 Network Mask • IPv4 DNS • IPv6 Link Local IP • Stateless IPv6 IP • Static IPv6 IP • Current IPv6 Gateway • IPv6 DNS **Note:** Only the MAC address that is currently in use is displayed (extension or shared).	XCC Network Information XCC Hostname: XCC-xxxx-SN MAC Address: xx:xx:xx:xx:xx:xx IPv4 IP: xx.xx.xx.xx IPv4 Network Mask: x.x.x.x IPv4 Default Gateway: x.x.x.x

System Environmental Information

Sub Menu	Example
• Ambient temperature • Exhaust temperature • PSU status • Spinning speed of fans by RPM	Ambient Temp: 24 C Exhaust Temp: 30 C PSU1: Vin= 213 w Inlet= 26 C FAN1 Front: 21000 RPM FAN2 Front: 21000 RPM FAN3 Front: 21000 RPM FAN4 Front: 21000 RPM

Active Sessions

Sub Menu	Example
Quantity of active sessions	Active User Sessions: 1

Actions

Sub Menu	Example
Several quick actions are available: • Restore XCC to Defaults • Force XCC Reset • Request XCC Reset • Set UEFI Memory Test • Clear CMOS • Request Virtual Reseat • Modify XCC Static IPv4 Address/Net mask/Gateway • Modify System Name • Generate/Download FFDC Service Data	Request XCC Reset? This will request the BMC to reboot itself. Hold √ for 3 seconds

System board components

The illustration in this section shows the component locations on the system board.

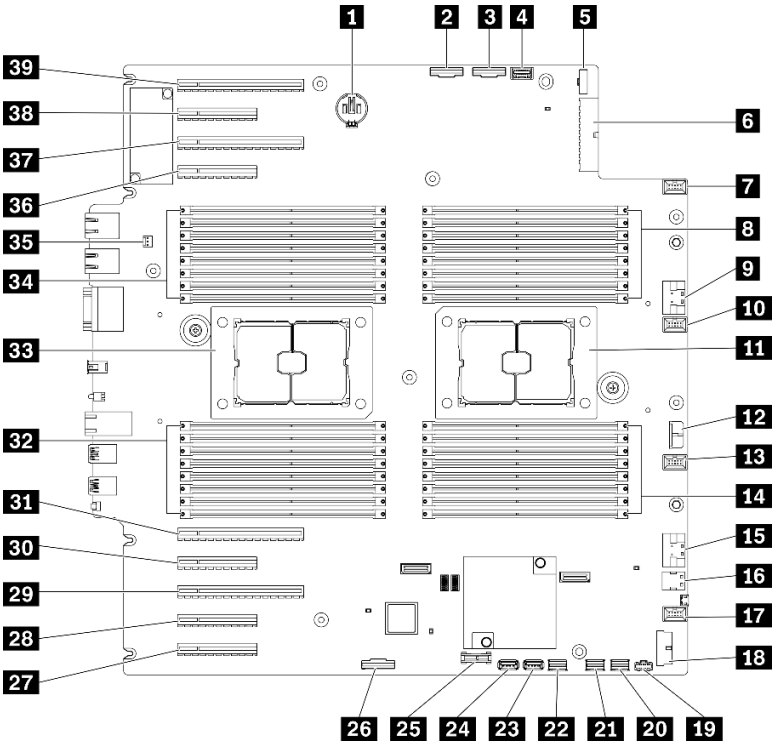

Figure 11. System board components

Table 10. Components on the system board

1 CMOS battery connector	21 SATA 0-3 connector
2 PCIe 2 connector	22 SATA 8-11 connector
3 PCIe 1 connector	23 Internal USB connector 3
4 Operator-information-panel connector	24 Internal USB connector 4
5 Power distribution board signal connector	25 TPM[1]/TCM[2] connector (for Chinese Mainland only)
6 Power distribution board power connector	26 PCIe slot 8 enable connector[3]
7 Fan 4 connector	27 PCIe slot 9 (processor 1)
8 DIMM 17-24 slots (processor 2)	28 PCIe slot 8 (processor 2)[3]
9 PCIe 3 connector	29 PCIe slot 7 (processor 2)
10 Fan 3 connector	30 PCIe slot 6 (processor 2)
11 Processor 2 socket	31 PCIe slot 5 (processor 2)
12 CFF RAID power connector	32 DIMM 9-16 slots (processor 1)
13 Fan 2 connector	33 Processor 1 socket
14 DIMM 25-32 slots (processor 2)	34 DIMM 1-8 slots (processor 1)
15 PCIe 4 connector[3]	35 Intrusion switch connector
16 M.2 signal connector	36 PCIe slot 4 (processor 2)
17 Fan 1 connector	37 PCIe slot 3 (processor 1)
18 Front USB connector	38 PCIe slot 2 (processor 1)

Table 10. Components on the system board (continued)

19 M.2 power connector	39 PCIe slot 1 (processor 1)
20 SATA 4-7 connector	

Notes:

- [1] Trusted Platform Module
- [2] Trusted Cryptographic Module
- [3] 28 PCIe slot 8 is disabled by default. Connect 26 PCIe slot 8 enable connector to 15 NVMe 4 connector to enable PCIe slot 8.

System board LEDs

The illustration in this section shows the LEDs on the system board.

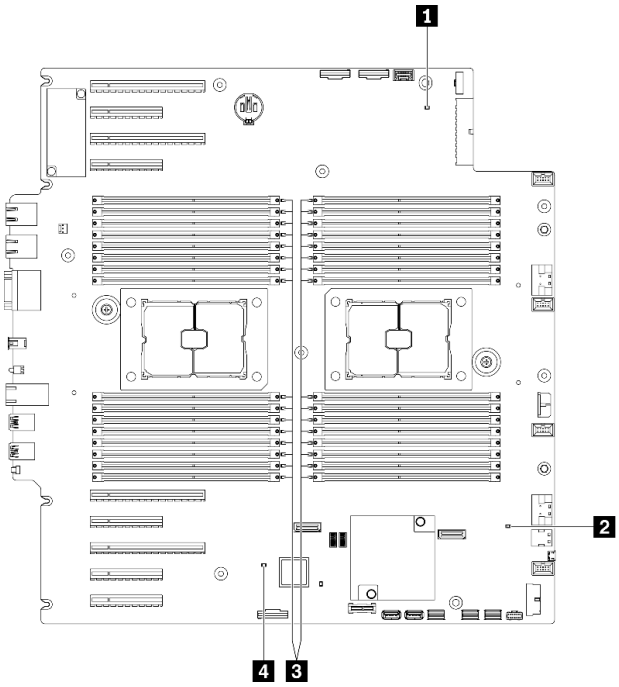

Figure 12. System board LEDs

Table 11. System-board LEDs

1 System power LED	3 DIMM error LEDs (available on some models)
2 FPGA heartbeat LED (green)	4 XCC heartbeat LED (green)

1 System power LED

The states of the power LED are as follows:

Off: No power supply is properly installed, or the LED itself has failed.

Flashing rapidly (four times per second): The server is turned off and is not ready to be turned on. The power-control button is disabled. This will last approximately 5 to 10 seconds.

Flashing slowly (once per second): The server is turned off and is ready to be turned on. You can press the power-control button to turn on the server.

Lit: The server is turned on.

2 FPGA heartbeat LED (green)

This LED indicates power-on and power-off sequencing.

- **LED blinking:** the system is functioning properly, and no action is necessary.
- **LED not blinking:** (trained technician only) replace the system board. See “System board replacement” in the *ThinkSystem ST650 V2 Maintenance Manual*.

3 DIMM error LEDs (available on some models)

When a DIMM error LED is lit, it indicates that the corresponding memory module has failed.

4 XCC heartbeat LED (green)

This LED indicates XCC heartbeat and boot process:

- **LED blinking fast:** XCC code is in the loading process.
- **LED going off momentarily:** XCC code has loaded completely.
- **LED going off momentarily and then starts blinking slowing:** XCC is fully operational. You can now press the power-control button to power on the server.

System board switches

Use this information to locate the system board switches.

Important:

- Read “Installation guidelines” on page 60 to ensure that you work safely.
- Prevent exposure to static electricity, which might lead to system halt and loss of data, by keeping static-sensitive components in their static-protective packages until installation, and handling these devices with an electrostatic-discharge wrist strap or other grounding system.
- Turn off the server before you move the switches; then, disconnect all power cords and external cables. Do not open your server or attempt any repair before reading and understanding the following information:
- Any system board switch that is not shown in the illustrations in this document are reserved.

Note: If there is a clear protective sticker on the top of the switch blocks, you must remove and discard it to access the switches.

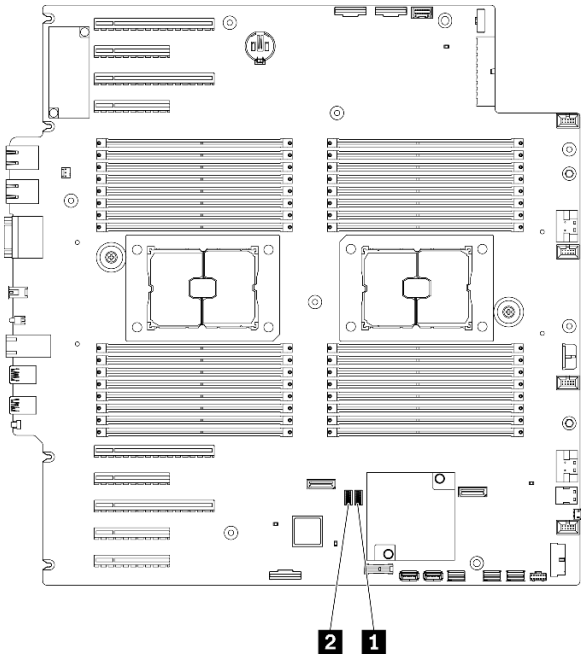

Figure 13. System board switches

Table 12. System board switches

1 SW3 switch block	2 SW2 switch block

Table 13. SW2 switch block definition

Switch number	Default position	Description	Definition
8	Off	Trusted Platform Module (TPM) physical presence	Changing this switch to the On position indicates a physical presence to the TPM.
7	Off	ME recovery	Changing this switch to the On position boots ME to recovery
6	On	Low security	Keeping this switch in the On position allows transitioning between signed official IMM builds and IMM test signed builds, and bypasses CRTM boot check of iMM firmware.
5	Off	Real time clock (RTC) reset	Changing this switch to the On position resets the RTC. A momentary toggle is all that is required. To avoid excessive CMOS battery drain, do not leave this switch in the On position.
4	Off	Password override	Changing this switch to the On position overrides the power-on password.
3	Off	Serial function selection	Off: function as system serial port. On: dump UEFI debug message to serial port.
2	Off	BMC Remote debug	Keeping this switch in the off position enables BMC remote debug.
1	Off	ME security override	Changing this switch to the On position disables ME Security checks.

Table 14. SW3 switch block definition

Switch number	Default position	Description	Definition
8	Off	Force BMC and CPU reset	Changing this switch to the On position forces BMC and CPU reset.
7	On	Power permission override	Changing this switch to the Off position ignores Power Permission and allows the system to power-on.
6	Off	Trusted Platform Module (TPM) physical presence	Changing this switch to the On position indicates a physical presence to the TPM.
5	Off	BMC boot primary	Off: XCC boots from upper half of flash region. On: XCC boots from lower half of flash region.
4	Off	Force XCC reset	Changing this switch to the On position forces XCC into reset.
3	Off	IMM force update	Changing this switch to the On position forces XCC to boot from kernel code only.
2	Off	XCC Trusted Platform Module (TPM) physical presence	Changing this switch to the On position indicates a physical presence to the XCC TPM.
1	Off	Force FPGA reset	Change this switch to the On position forces FPGA into reset.

Server locks

Locking the server cover prevents unauthorized access to the inside of your server and access to the installed drives.

Server cover and security door lock

The server cover and security door lock prevents unauthorized access to the inside of your server and the installed drives in the drive cage. You can remove the key attached on the rear of the server and use it to unlock or lock the server cover and the security door of the server.

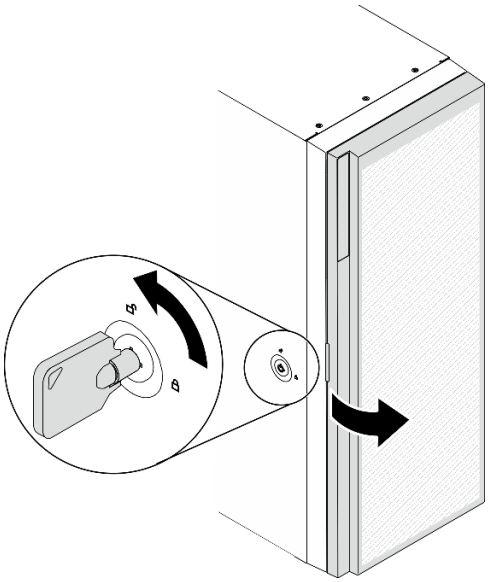

Figure 14. Server cover and security door lock

Backplates and backplanes

Use the section to understand the internal connectors on the backplate or the backplane you use.

2.5-inch drive backplanes

Use this information to locate the connectors on the 2.5-inch drive backplanes.

2.5-inch SAS/SATA 8-bay backplane

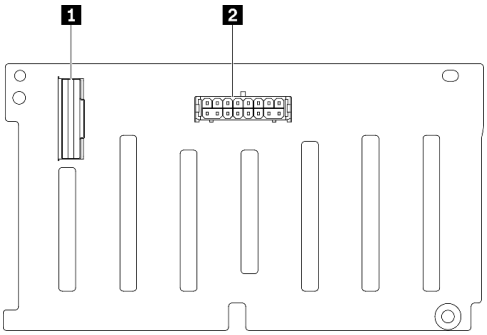

1 SAS/SATA connector

2 Power connector

Figure 15. 2.5-inch SAS/SATA 8-bay backplane connectors

2.5-inch SAS/SATA/NVMe and NVMe 8-bay backplane

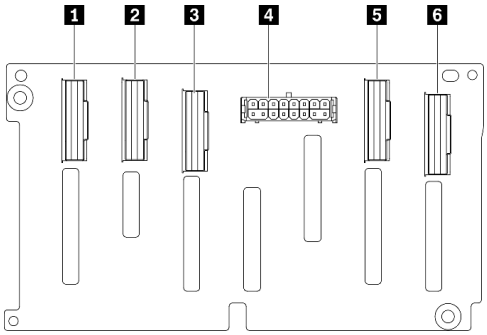

1 NVMe 6-7 connector
2 NVMe 4-5 connector
3 SAS/SATA connector
4 Power connector
5 NVMe 2-3 connector
6 NVMe 0-1 connector

Figure 16. 2.5-inch SAS/SATA/NVMe and NVMe 8-bay backplane connectors

3.5-inch drive backplanes

Use this information to locate the connectors on the 3.5-inch drive backplanes.

3.5-inch SAS/SATA 4-bay backplane

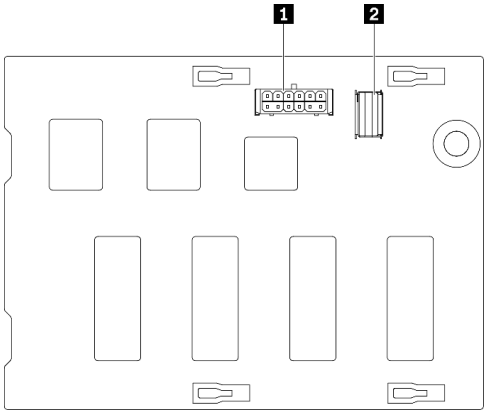

1 Power connector
2 SAS/SATA connector

Figure 17. 3.5-inch SAS/SATA 4-bay backplane connectors

3.5-inch SAS/SATA/NVMe and NVMe 4-bay backplane

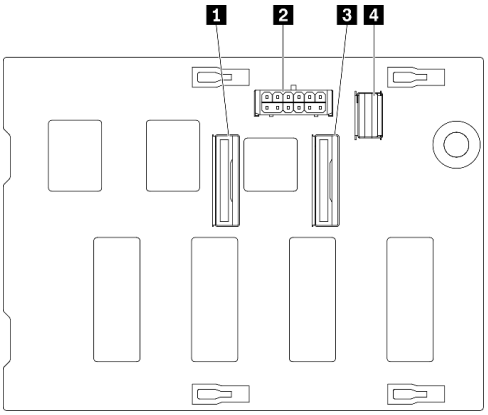

1 NVMe 0-1 connector
2 Power connector
3 NVMe 2-3 connector
4 SAS/SATA connector

Figure 18. 3.5-inch SAS/SATA/NVMe and NVMe 4-bay backplane connectors

3.5-inch drive backplate

Use this information to locate the connectors on the 3.5-inch drive backplate.

3.5-inch SAS/SATA 4-bay backplate

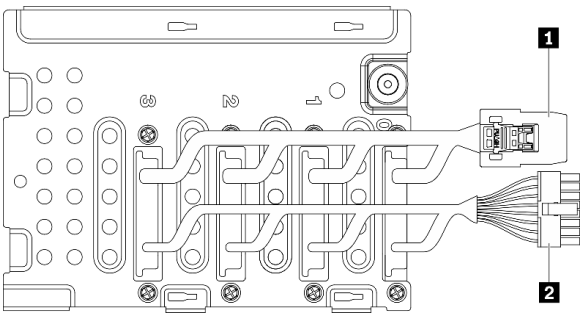

1 Signal cable
2 Power cable

Figure 19. 3.5-inch SAS/SATA 4-bay backplate cables

Power distribution board connectors

Use this information to locate the connectors on the power distribution board connectors.

ThinkSystem ST650 V2 PDB

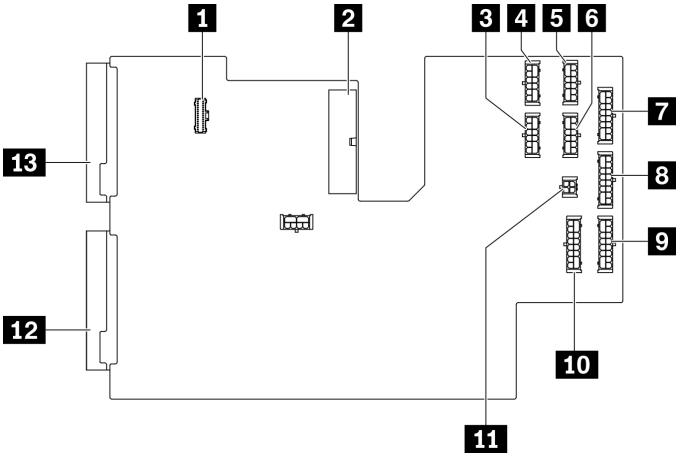

Figure 20. Connectors on the ThinkSystem ST650 V2 PDB

1 PDB signal connector	8 BP 3 power connector
2 Main power connector	9 BP 2 power connector
3 GPU 3 power connector	10 BP 1 power connector
4 GPU 1 power connector	11 ODD power connector
5 GPU 2 power connector	12 PSU 2 power connector
6 GPU 4 power connector	13 PSU 1 power connector
7 BP 4 power connector	

Parts list

Use the parts list to identify each of the components that are available for your server.

Note: Depending on the model, your server might look slightly different from the illustration.

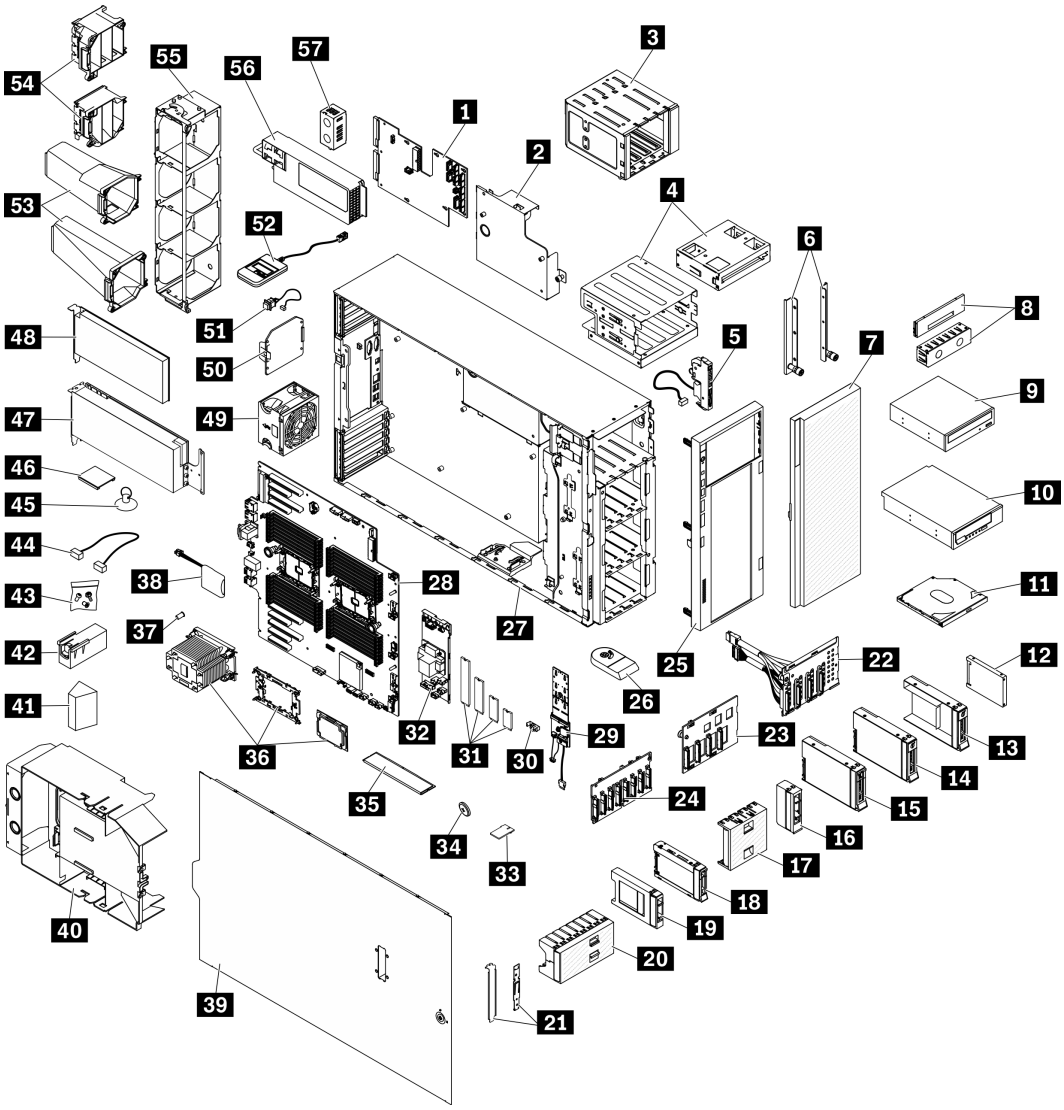

Figure 21. Server components

The parts listed in the following table are identified as one of the following:

- **Tier 1 customer replaceable unit (CRU):** Replacement of Tier 1 CRUs is your responsibility. If Lenovo installs a Tier 1 CRU at your request with no service agreement, you will be charged for the installation.
- **Tier 2 customer replaceable unit (CRU):** You may install a Tier 2 CRU yourself or request Lenovo to install it, at no additional charge, under the type of warranty service that is designated for your server.
- **Field replaceable unit (FRU):** FRUs must be installed only by trained service technicians.
- **Consumable and Structural parts:** Purchase and replacement of consumable and structural parts is your responsibility. If Lenovo acquires or installs a structural component at your request, you will be charged for the service.

Table 15. Parts listing

Index	Description	Tier 1 CRU	Tier 2 CRU	FRU	Consumable and Structural parts
For more information about ordering the parts shown in Figure 21 “Server components” on page 43: http://datacentersupport.lenovo.com/products/servers/thinksystem/st650v2/7z74/parts It is highly recommended that you check the power summary data for your server using Lenovo Capacity Planner before purchasing any new parts.					
1	Power distribution board			√	
2	Power distribution board cover				√
3	Expansion drive cage	√			
4	Optical drive cage and 5.25-inch drive bay adapter	√			
5	Front panel board assembly		√		
6	EIA brackets	√			
7	Security door	√			
8	Tape/Optical drive filler cover and tape drive filler				√
9	5.25-inch optical disk drive	√			
10	5.25-inch LTO/RDX tape drive	√			
11	Slim optical drive	√			
12	2.5-inch drive	√			
13	3.5-inch drive tray with 2.5-inch to 3.5-inch drive adapter	√			
14	3.5-inch simple-swap drive	√			
15	3.5-inch hot-swap drive	√			
16	Filler, 3.5-inch storage drive (single bay)				√
17	Filler, 3.5-inch storage drive (four bay)				√
18	2.5-inch hot-swap drive	√			
19	Filler, 2.5-inch storage drive (single bay)				√
20	Filler, 2.5-inch storage drive (eight bay)				√
21	Bracket kit (drive retainer and PCIe bracket)				√
22	3.5-inch simple-swap drive backplate	√			
23	3.5-inch hot-swap drive backplane	√			
24	2.5-inch hot-swap drive backplane	√			

Table 15. Parts listing (continued)

Index	Description	Tier 1 CRU	Tier 2 CRU	FRU	Consumable and Structural parts
25	Front bezel	√			
26	Foot stand				√
27	Chassis			√	
28	System board			√	
29	M.2 boot adapter	√			
30	M.2 retainer clip	√			
31	M.2 drive	√			
32	Internal CFF RAID adapter	√			
33	TPM card (for Chinese Mainland only)			√	
34	CMOS battery (CR2032)				√
35	DIMM	√			
36	PHM module (heatsink, carrier, processor)			√	
37	Heat sink Torx T30 nut		√		
38	Flash power module	√			
39	Server cover	√			
40	Air baffle				√
41	T4 filler	√			
42	Full-length GPU filler				√
43	Screw kit				√
44	Cables	√			
45	Suction cup (for NVLink bridge)				√
46	NVLink bridge	√			
47	Full-length GPU adapter	√			
48	PCIe adapter	√			
49	Fan module	√			
50	Fan filler				√
51	Intrusion switch	√			
52	External LCD diagnostics handset	√			
53	A2/L4 GPU air ducts	√			
54	Full-length PCIe adapter holders				√

Table 15. Parts listing (continued)

Index	Description	Tier 1 CRU	Tier 2 CRU	FRU	Consumable and Structural parts
55	Fan cage				√
56	Power supply unit	√			
57	PSU filler	√			

Power cords

Several power cords are available, depending on the country and region where the server is installed.

To view the power cords that are available for the server:

1. Go to:

   http://dcsc.lenovo.com/#/
2. Click **Preconfigured Model** or **Configure to order**.
3. Enter the machine type and model for your server to display the configurator page.
4. Click **Power → Power Cables** to see all line cords.

Notes:

- For your safety, a power cord with a grounded attachment plug is provided to use with this product. To avoid electrical shock, always use the power cord and plug with a properly grounded outlet.
- Power cords for this product that are used in the United States and Canada are listed by Underwriter's Laboratories (UL) and certified by the Canadian Standards Association (CSA).
- For units intended to be operated at 115 volts: Use a UL-listed and CSA-certified cord set consisting of a minimum 18 AWG, Type SVT or SJT, three-conductor cord, a maximum of 15 feet in length and a parallel blade, grounding-type attachment plug rated 15 amperes, 125 volts.
- For units intended to be operated at 230 volts (U.S. use): Use a UL-listed and CSA-certified cord set consisting of a minimum 18 AWG, Type SVT or SJT, three-conductor cord, a maximum of 15 feet in length and a tandem blade, grounding-type attachment plug rated 15 amperes, 250 volts.
- For units intended to be operated at 230 volts (outside the U.S.): Use a cord set with a grounding-type attachment plug. The cord set should have the appropriate safety approvals for the country in which the equipment will be installed.
- Power cords for a specific country or region are usually available only in that country or region.

Chapter 3. Internal cable routing

Some of the components in the server have internal cables and cable connectors.

To connect cables, observe the following guidelines:

- Turn off the server before you connect or disconnect any internal cables.
- See the documentation that comes with any external devices for additional cabling instructions. It might be easier for you to route cables before you connect the devices to the server.
- Cable identifiers of some cables are printed on the cables that come with the server and optional devices. Use these identifiers to connect the cables to the correct connectors.
- Ensure that the cable is not pinched and does not cover any connectors or obstruct any components on the system board.
- Ensure that the relevant cables pass through the cable clips and guides.

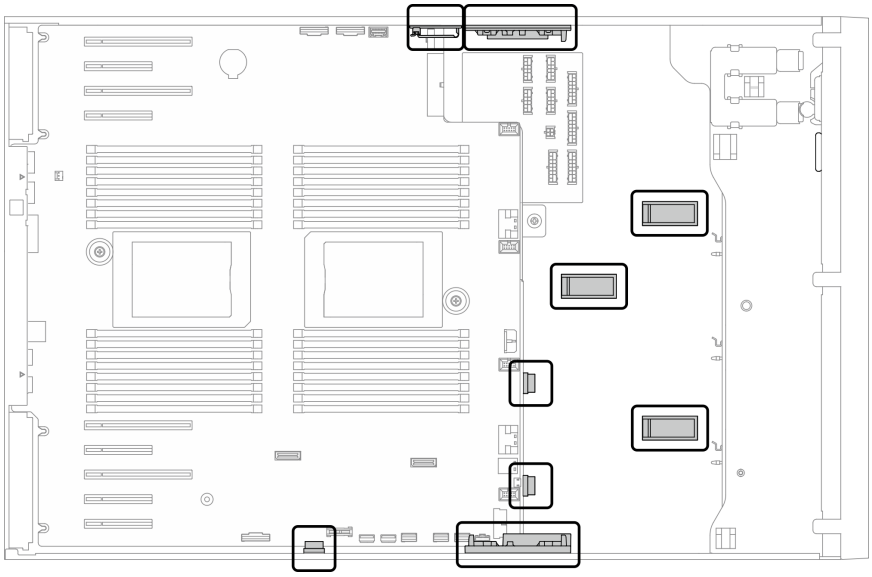

Figure 22. Cable clips and guides on 2.5-inch chassis

© Copyright Lenovo 2020, 2025

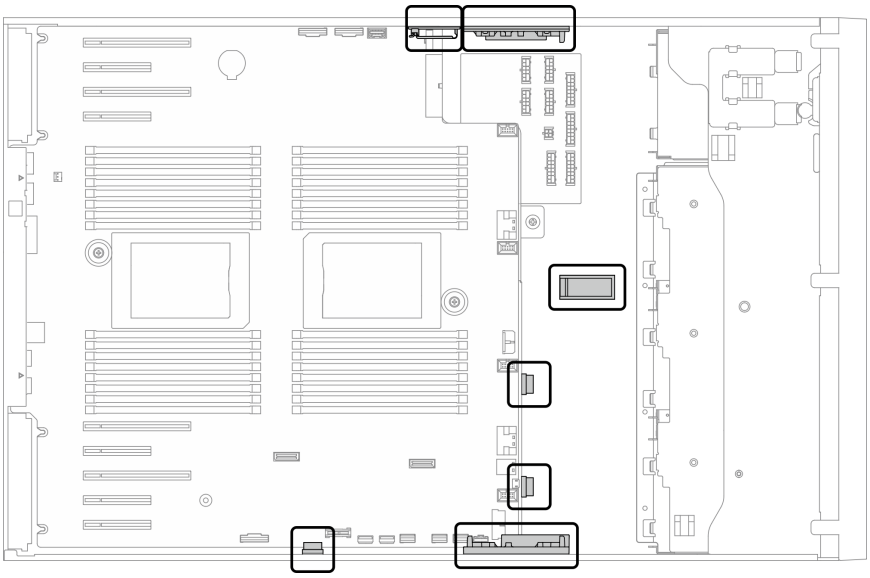

Figure 23. Cable clips and guides on 3.5-inch chassis

Attention: Disengage all latches, release tabs, or locks on cable connectors when you disconnect cables from the system board. Failing to release them before removing the cables will damage the cable sockets on the system board, which are fragile. Strictly observe the following instructions to avoid damaging cable sockets on the system board. Any damage to the cable sockets might require replacing the system board.

- Connect cable connectors vertically or horizontally in alignment with the orientations of the corresponding cable sockets, avoiding any tilt.
- To disconnect cables from the system board, do as follows:
  1. Press and hold all latches, release tabs, or locks on cable connectors to release the cable connectors.
  2. Remove the cable connectors vertically or horizontally in alignment with the orientations of the corresponding cable sockets, avoiding any tilt.

     Note: The cable connectors might look different from those in the illustration, but the removal procedure is the same.

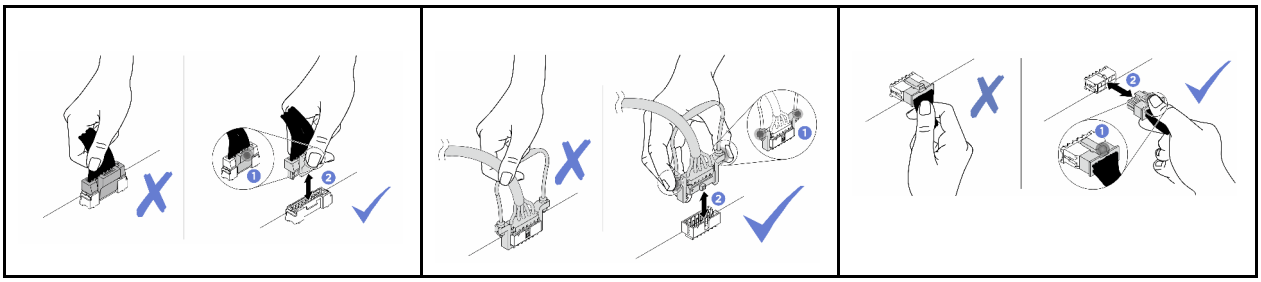

Backplane and backplate cable routing

For more information about the backplane and backplate cable routing, see *ThinkSystem ST650 V2 Backplane/Backplate Cable Routing Guide*.

Front panel cable routing

Use the section to understand the cable routing for the front panel.

From	To
1 Rear of front panel	System board: Operator-information-panel connector

Notes:

- Connections between connectors; 1↔1, 2↔2, 3↔3, ... n↔n
- When routing the cables, ensure that all cables are routed appropriately through the cable guides and cable clips.

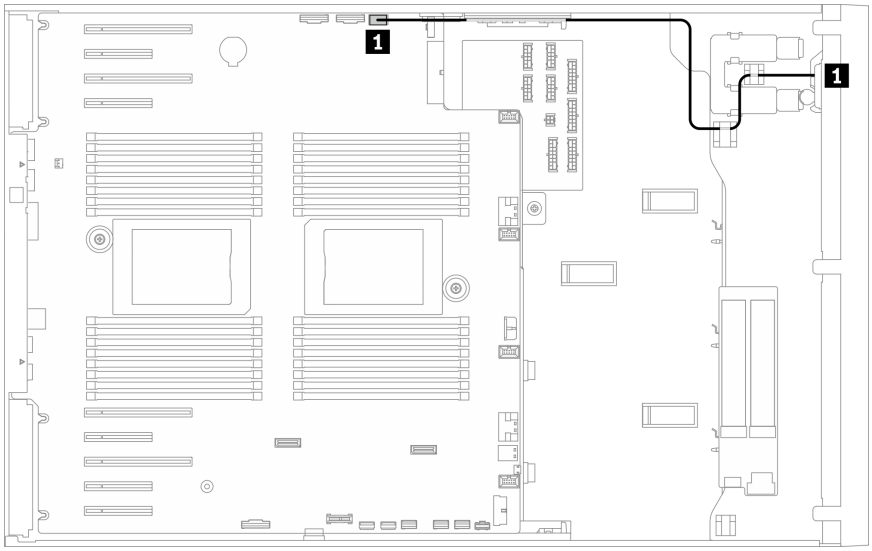

Figure 24. Cable routing for front panel

Front USB cable routing

Use the section to understand the cable routing for the front USB.

From	To
1 Rear of front panel	System board: Front USB connector

Notes:

- Connections between connectors; 1↔1, 2↔2, 3↔3, ... n↔n
- When routing the cables, ensure that all cables are routed appropriately through the cable guides and cable clips.

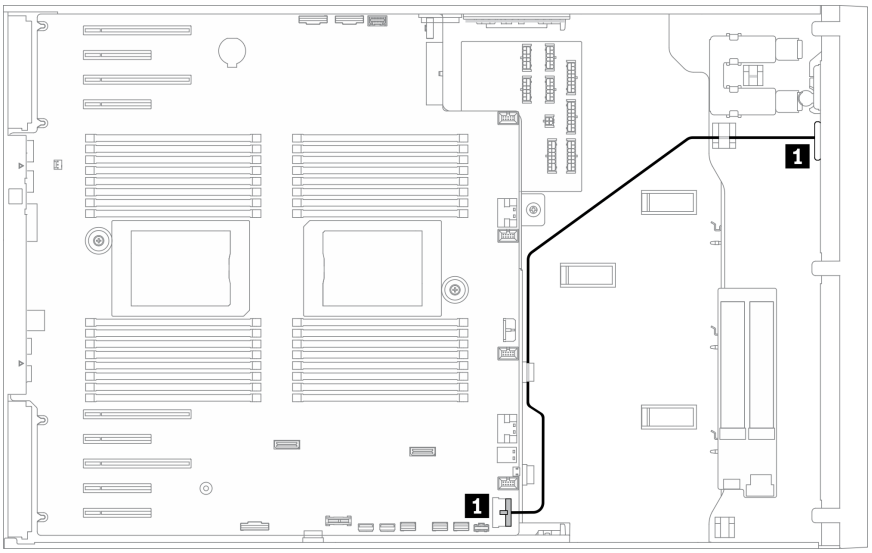

Figure 25. Cable routing for front USB

GPU cable routing

Use this section to understand the cable routing for the GPU.

Important: If the label on the GPU power cable shows connector information different from the illustration and table in this section, follow the instructions here.

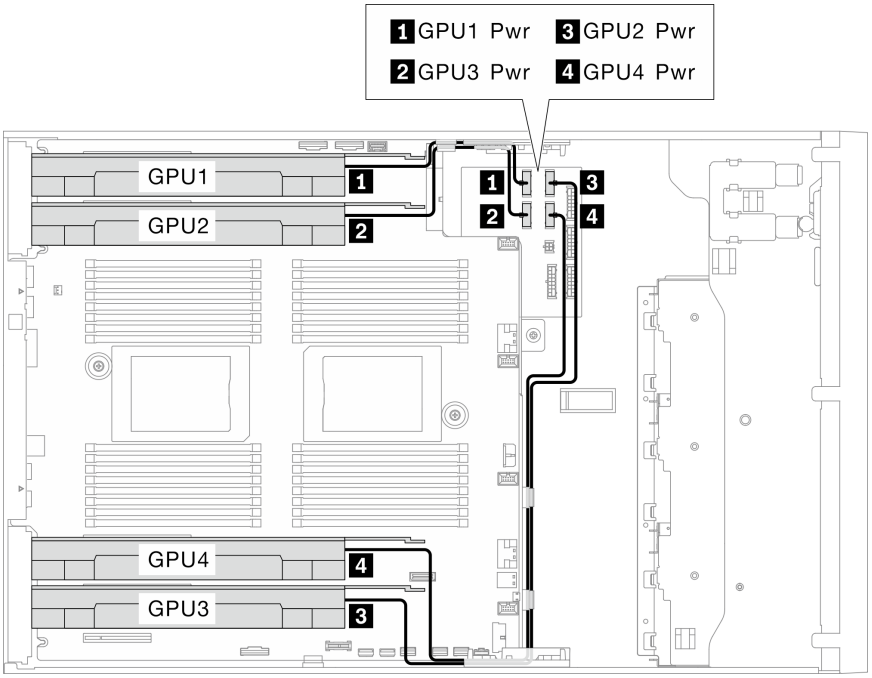

Figure 26. Cable routing for GPU

From	To power distribution board	Cable length
1 GPU 1 (PCIe slot 1)	GPU 1 power connector	320 mm
2 GPU 2 (PCIe slot 3)	GPU 3 power connector	320 mm
3 GPU 3 (PCIe slot 7)	GPU 2 power connector	660 mm
4 GPU 4 (PCIe slot 5)	GPU 4 power connector	660 mm

Notes:

- Depending on the GPU model, the information provided in the label of the GPU power cable might not match the connectors on the power distribution board.
- Make sure to follow the instructions in this table and illustration when connecting the GPU power cables:
  - For GPU 1 and GPU 2, use the shorter cables (320 mm).
  - For GPU 3 and GPU 4, use the longer cables (660 mm).
  - If the label on the GPU power cable shows connector information different from the illustration and table in this section, follow the instructions here.

Notes:

- Connections between connectors; 1↔1, 2↔2, 3↔3, … n↔n
- When routing the cables, ensure that all cables are routed appropriately through the cable guides and cable clips.

Internal CFF RAID adapter cable routing

Use this section to understand the cable routing for the CFF RAID adapter.

From	To
1 Signal connector on the CFF RAID adapter	System board: PCIe 3 connector connector
2 Power connector on the CFF RAID adapter	System board: CFF RAID power connector

Notes:

- Connections between connectors; 1↔1, 2↔2, 3↔3, … n↔n
- When routing the cables, ensure that all cables are routed appropriately through the cable guides and cable clips.

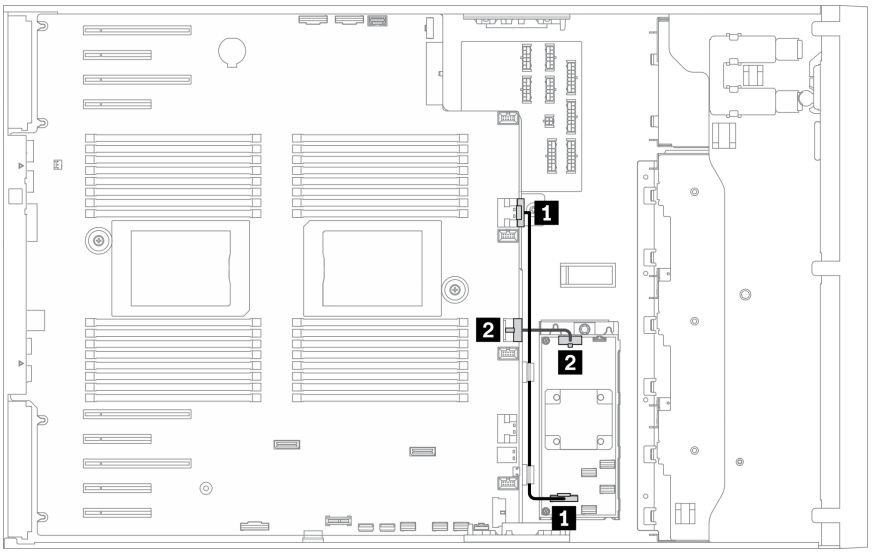

Figure 27. Cable routing for the CFF RAID adapter

M.2 boot adapter cable routing

Use the section to understand the cable routing for the M.2 boot adapter.

From	To
1 M.2 power connector on the M.2 boot adapter	System board: M.2 power connector
2 M.2 signal connector on the M.2 boot adapter	System board: M.2 signal connector

Notes:

- Connections between connectors; 1↔1, 2↔2, 3↔3, ... n↔n
- When routing the cables, ensure that all cables are routed appropriately through the cable guides and cable clips.

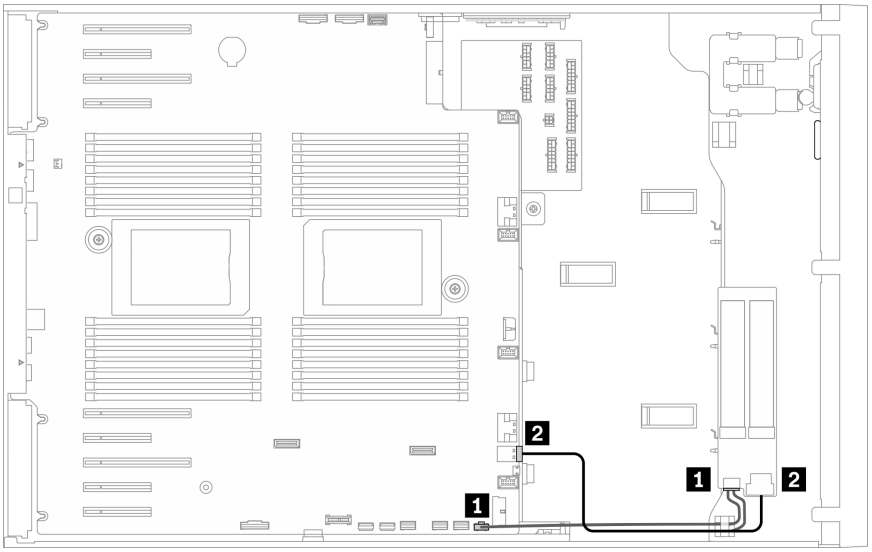

Figure 28. Cable routing for M.2 boot adapter

Optical drive cable routing

Use the section to understand the cable routing for the optical drives.

From	To
1 Signal connector on optical drive	System board: Internal USB connector 3

Notes:

- Connections between connectors; 1↔1, 2↔2, 3↔3, ... n↔n
- When routing the cables, ensure that all cables are routed appropriately through the cable guides and cable clips.

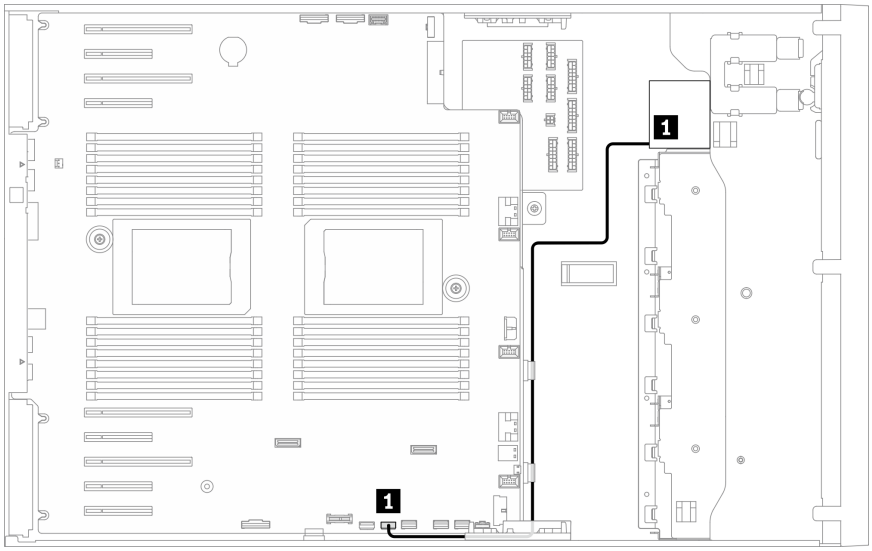

Figure 29. Cable routing for optical drive

PCIe slot 8 cable routing

Use the section to understand the cable routing to enable PCIe slot 8.

From	To
1 System board: PCIe slot 8 enable connector	System board: PCIe 4 connector

Notes:

- Connections between connectors; 1↔1, 2↔2, 3↔3, ... n↔n
- When routing the cables, ensure that all cables are routed appropriately through the cable guides and cable clips.

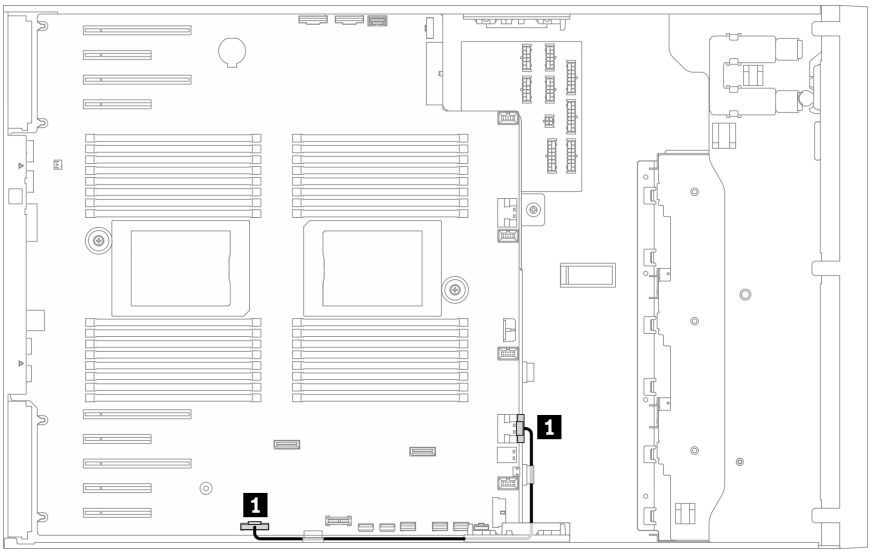

Figure 30. Cable routing to enable PCIe slot 8

Power distribution board cable routing

Use the section to understand the cable routing for the power distribution board.

From	To
1 Power distribution board: Main power connector	System board: Power distribution board power connector
2 Power distribution board: PDB signal connector	System board: Power distribution board signal connector

Notes:

- Connections between connectors; 1↔1, 2↔2, 3↔3, ... n↔n
- When routing the cables, ensure that all cables are routed appropriately through the cable guides and cable clips.

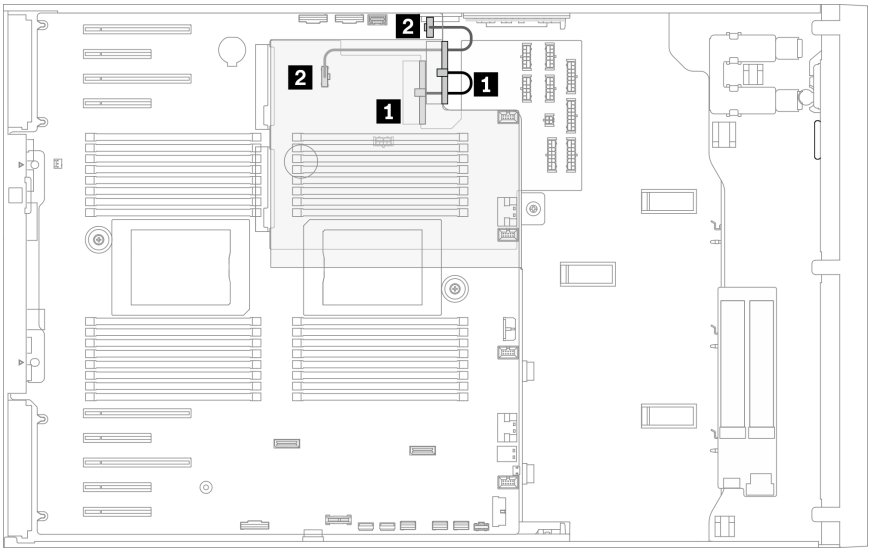

Figure 31. Cable routing for power distribution board

Tape drive cable routing

Use the section to understand the cable routing for the tape drive.

SAS tape drive

From	To
1 Power connector on signal cable	Power distribution board: ODD power connector
2 Signal connector on tape drive	An available connector on the RAID/HBA adapter

Notes:

- Connections between connectors; 1↔1, 2↔2, 3↔3, … n↔n
- When routing the cables, ensure that all cables are routed appropriately through the cable guides and cable clips.
- The following illustrations show the cable routing for PCIe slot 1 and 9 respectively, the routing for the other PCIe slots are similar.

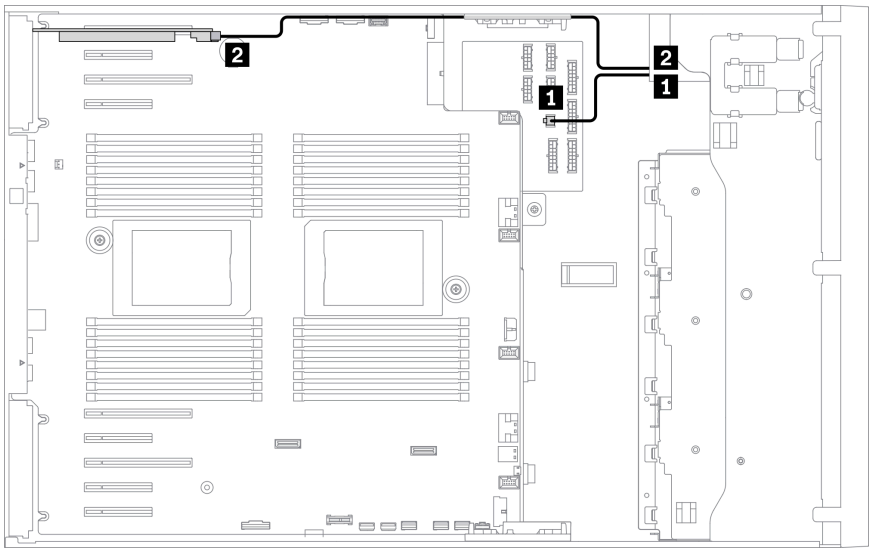

Figure 32. Cable routing for SAS tape drive to PCIe slot 1

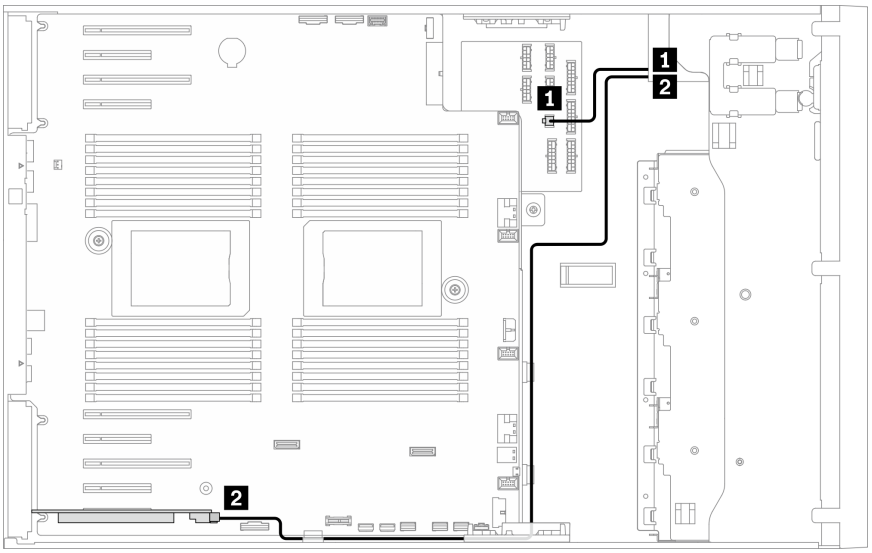

Figure 33. Cable routing for SAS tape drive to PCIe slot 9

USB tape drive

From	To
1 Power connector on tape drive	Power distribution board: ODD power connector
2 Signal connector on tape drive	System board: Internal USB connector 4

Notes:

- Connections between connectors; 1↔1, 2↔2, 3↔3, ... n↔n
- When routing the cables, ensure that all cables are routed appropriately through the cable guides and cable clips.

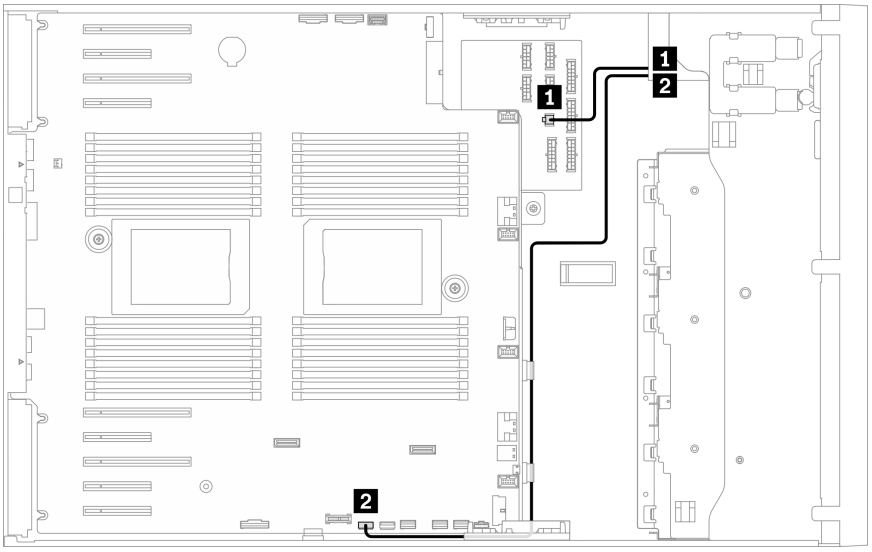

Figure 34. Cable routing for the USB tape drive

Chapter 4. Server hardware setup

To set up the server, install any options that have been purchased, cable the server, configure and update the firmware, and install the operating system.

Server setup checklist

Use the server setup checklist to ensure that you have performed all tasks that are required to set up your server.

The server setup procedure varies depending on the configuration of the server when it was delivered. In some cases, the server is fully configured and you just need to connect the server to the network and an ac power source, and then you can power on the server. In other cases, the server needs to have hardware options installed, requires hardware and firmware configuration, and requires an operating system to be installed.

The following steps describe the general procedure for setting up a server:

1. Unpack the server package. See "Server package contents" on page 1.
2. Set up the server hardware.
   a. Install any required hardware or server options. See the related topics in "Install server hardware options" on page 83.
   b. If necessary, install the server into a standard rack cabinet by using the tower to rack conversion kit. For instructions on how to install the tower to rack conversion kit, refer to "Install the tower to rack conversion kit" on page 154.
   c. Connect the Ethernet cables and power cords to the server. See "Rear view" on page 24 to locate the connectors. See "Cable the server" on page 157 for cabling best practices.
   d. Power on the server. See "Power on the server" on page 158.

      Note: You can access the management processor interface to configure the system without powering on the server. Whenever the server is connected to power, the management processor interface is available. For details about accessing the management server processor, see:

      "Opening and Using the XClarity Controller Web Interface" section in the XCC documentation version compatible with your server at https://pubs.lenovo.com/lxcc-overview/.
   e. Validate that the server hardware was set up successfully. See "Validate server setup" on page 158.
3. Configure the system.
   a. Connect the Lenovo XClarity Controller to the management network. See "Set the network connection for the Lenovo XClarity Controller" on page 159.
   b. Update the firmware for the server, if necessary. See "Update the firmware" on page 161.
   c. Configure the firmware for the server. See "Configure the firmware" on page 164.

      The following information is available for RAID configuration:

      - https://lenovopress.com/lp0578-lenovo-raid-introduction
      - https://lenovopress.com/lp0579-lenovo-raid-management-tools-and-resources
   d. Install the operating system. See "Deploy the operating system" on page 166.
   e. Back up the server configuration. See "Back up the server configuration" on page 167.
   f. Install the applications and programs for which the server is intended to be used.

© Copyright Lenovo 2020, 2025

Installation guidelines

Use the installation guidelines to install components in your server.

Before installing optional devices, read the following notices carefully:

Attention: Prevent exposure to static electricity, which might lead to system halt and loss of data, by keeping static-sensitive components in their static-protective packages until installation, and handling these devices with an electrostatic-discharge wrist strap or other grounding system.

- Read the safety information and guidelines to ensure your safety at work:
  - A complete list of safety information for all products is available at:

    https://pubs.lenovo.com/safety_documentation/
  - The following guidelines are available as well: "Handling static-sensitive devices" on page 62 and "Working inside the server with the power on" on page 62.
- Make sure the components you are installing are supported by your server. For a list of supported optional components for the server, see https://serverproven.lenovo.com/.
- When you install a new server, download and apply the latest firmware. This will help ensure that any known issues are addressed, and that your server is ready to work with optimal performance. Go to ThinkSystem ST650 V2 Drivers and Software to download firmware updates for your server.

  Important: Some cluster solutions require specific code levels or coordinated code updates. If the component is part of a cluster solution, verify the latest Best Recipe code level menu for cluster supported firmware and driver before you update the code.
- It is good practice to make sure that the server is working correctly before you install an optional component.
- Keep the working area clean, and place removed components on a flat and smooth surface that does not shake or tilt.
- Do not attempt to lift an object that might be too heavy for you. If you have to lift a heavy object, read the following precautions carefully:
  - Make sure that you can stand steadily without slipping.
  - Distribute the weight of the object equally between your feet.
  - Use a slow lifting force. Never move suddenly or twist when you lift a heavy object.
  - To avoid straining the muscles in your back, lift by standing or by pushing up with your leg muscles.
- Make sure that you have an adequate number of properly grounded electrical outlets for the server, monitor, and other devices.
- Back up all important data before you make changes related to the disk drives.
- Have a small flat-blade screwdriver, a small Phillips screwdriver, and a T8 torx screwdriver available.
- To view the error LEDs on the system board and internal components, leave the power on.
- You do not have to turn off the server to remove or install hot-swap power supplies, hot-swap fans, or hot-plug USB devices. However, you must turn off the server before you perform any steps that involve removing or installing adapter cables, and you must disconnect the power source from the server before you perform any steps that involve removing or installing a riser card.
- Blue on a component indicates touch points, where you can grip to remove a component from or install it in the server, open or close a latch, and so on.
- Terra-cotta on a component or a terra-cotta label on or near a component indicates that the component can be hot-swapped if the server and operating system support hot-swap capability, which means that you can remove or install the component while the server is still running. (Terra-cotta can also indicate

touch points on hot-swap components.) See the instructions for removing or installing a specific hot-swap component for any additional procedures that you might have to perform before you remove or install the component.

- The Red strip on the drives, adjacent to the release latch, indicates that the drive can be hot-swapped if the server and operating system support hot-swap capability. This means that you can remove or install the drive while the server is still running.

  Note: See the system specific instructions for removing or installing a hot-swap drive for any additional procedures that you might need to perform before you remove or install the drive.
- After finishing working on the server, make sure you reinstall all safety shields, guards, labels, and ground wires.

Safety inspection checklist

Use the information in this section to identify potentially unsafe conditions with your server. As each machine was designed and built, required safety items were installed to protect users and service technicians from injury.

Notes:

1. The product is not suitable for use at visual display workplaces according to §2 of the Workplace Regulations.
2. The set-up of the server is made in the server room only.

CAUTION:
This equipment must be installed or serviced by trained personnel, as defined by the NEC, IEC 62368-1 & IEC 60950-1, the standard for Safety of Electronic Equipment within the Field of Audio/Video, Information Technology and Communication Technology. Lenovo assumes you are qualified in the servicing of equipment and trained in recognizing hazards energy levels in products. Access to the equipment is by the use of a tool, lock and key, or other means of security, and is controlled by the authority responsible for the location.

Important: Electrical grounding of the server is required for operator safety and correct system function. Proper grounding of the electrical outlet can be verified by a certified electrician.

Use the following checklist to verify that there are no potentially unsafe conditions:

1. Make sure that the power is off and the power cord is disconnected.
2. Check the power cord.
   - Make sure that the third-wire ground connector is in good condition. Use a meter to measure third-wire ground continuity for 0.1 ohm or less between the external ground pin and the frame ground.
   - Make sure that the power cord is the correct type.

     To view the power cords that are available for the server:

     a. Go to:

     http://dcsc.lenovo.com/#/

     b. Click **Preconfigured Model** or **Configure to order**.

     c. Enter the machine type and model for your server to display the configurator page.

     d. Click **Power → Power Cables** to see all line cords.
   - Make sure that the insulation is not frayed or worn.
3. Check for any obvious non-Lenovo alterations. Use good judgment as to the safety of any non-Lenovo alterations.

4. Check inside the server for any obvious unsafe conditions, such as metal filings, contamination, water or other liquid, or signs of fire or smoke damage.
5. Check for worn, frayed, or pinched cables.
6. Make sure that the power-supply cover fasteners (screws or rivets) have not been removed or tampered with.

System reliability guidelines

The system reliability guidelines to ensure proper system cooling.

Make sure the following requirements are met:

- When the server comes with redundant power, a power supply must be installed in each power-supply bay.
- Adequate space around the server must be spared to allow server cooling system to work properly. Leave approximately 50 mm (2.0 in.) of open space around the front and rear of the server. Do not place any object in front of the fans.
- For proper cooling and airflow, refit the server cover before you turn the power on. Do not operate the server for more than 30 minutes with the server cover removed, for it might damage server components.
- Cabling instructions that come with optional components must be followed.
- A failed fan must be replaced within 48 hours since malfunction.
- A removed hot-swap drive must be replaced within two minutes after removal.
- A removed hot-swap power supply must be replaced within two minutes after removal.
- Every air baffle that comes with the server must be installed when the server starts (some servers might come with more than one air baffle). Operating the server with a missing air baffle might damage the processor.
- All processor sockets must contain either a socket cover or a processor with heat sink.
- When more than one processor is installed, fan population rules for each server must be strictly followed.

Working inside the server with the power on

Guidelines to work inside the server with the power on.

Attention: The server might stop and loss of data might occur when internal server components are exposed to static electricity. To avoid this potential problem, always use an electrostatic-discharge wrist strap or other grounding systems when working inside the server with the power on.

- Avoid loose-fitting clothing, particularly around your forearms. Button or roll up long sleeves before working inside the server.
- Prevent your necktie, scarf, badge rope, or long hair from dangling into the server.
- Remove jewelry, such as bracelets, necklaces, rings, cuff links, and wrist watches.
- Remove items from your shirt pocket, such as pens and pencils, in case they fall into the server as you lean over it.
- Avoid dropping any metallic objects, such as paper clips, hairpins, and screws, into the server.

Handling static-sensitive devices

Follow this procedure to handle static-sensitive devices.

Attention: Prevent exposure to static electricity, which might lead to system halt and loss of data, by keeping static-sensitive components in their static-protective packages until installation, and handling these devices with an electrostatic-discharge wrist strap or other grounding system.

- Limit your movement to prevent building up static electricity around you.
- Take additional care when handling devices during cold weather, for heating would reduce indoor humidity and increase static electricity.
- Always use an electrostatic-discharge wrist strap or other grounding system.
- While the device is still in its static-protective package, touch it to an unpainted metal surface on the outside of the server for at least two seconds. This drains static electricity from the package and from your body.
- Remove the device from the package and install it directly into the server without putting it down. If it is necessary to put the device down, put it back into the static-protective package. Never place the device on the server or on any metal surface.
- When handling a device, carefully hold it by the edges or the frame.
- Do not touch solder joints, pins, or exposed circuitry.
- Keep the device from others' reach to prevent possible damages.

Memory module installation rules and order

Memory modules must be installed in a specific order based on the memory configuration that you implement on your server.

For information about memory modes, see "Technical rules for memory modules" on page 65.

Technical rules

This topic provides technical rules for the server.

- "Technical rules for GPU" on page 63
- "Technical rules for memory modules" on page 65
- "Technical rules for system fans" on page 78
- "Technical rules for PCIe slots" on page 77

Technical rules for GPU

GPU configuration that you implement on your server requires a specific PSU configuration as well as configuration of other components..

Rules of GPU and PSU configuration

PSU Wattage	70W GPU	160W GPU	300W GPU	70W + 160W GPU	70W + 300W GPU	160W + 300W GPU
Two 750W PSUs	7	3	1	Total 3	300W x 1	300W x 1
Two 1100W PSUs	8 (No limitation)	4	2	Total 4	300W x 2	300W x 2

PSU Wattage	70W GPU	160W GPU	300W GPU	70W + 160W GPU	70W + 300W GPU	160W + 300W GPU
Two 1800W PSUs	8 (No limitation)	7	4 (No limitation)	Total 7	70W x 4 + 300W x 2	160W x 3 + 300W x 2
Two 2400W PSUs	8 (No limitation)	8 (No limitation)	4 (No limitation)	Total 8	70W x 4 + 300W x 2	160W x 4 + 300W x 2

GPU installation rules

GPU installation rules

1. ThinkSystem ST650 V2 does not support mixing GPUs between PCIe slots 1 and 4 or between slots 5 and 8.
   - When a GPU is installed between PCIe slots 1 and 4, only the same type of GPUs can be installed in other slots between 1 and 4.
   - When a GPU is installed between PCIe slots 5 and 8, only the same type of GPUs can be installed in other slots between 5 and 8.
2. When NVIDIA A6000/RTX4000/A2/L4/T4 GPUs are installed between PCIe slots 1 and 4, these slots do not support any RAID adapter, HBA, or Retimer.
3. When NVIDIA A6000/RTX4000/A2/L4/T4 GPUs are installed between PCIe slots 5 and 8, these slots do not support any RAID adapter, HBA, or Retimer.
4. When NVIDIA A6000/A2000/RTX4000 are installed between PCIe slots 1 and 4, SAS tape drive or 430-8i SAS HBA are not supported.
5. The installation of a **full-length double-width GPU adapter** should follow the rules specified below:
   - Follow the installation sequence: slot 1 >> 3 >> 7 >> 5
   - One or two **FL PCIe adapter holders** are required to have been installed corresponding to the PCIe slot(s) for the FL GPU adapter(s) to be installed. See “PCIe adapter holder replacement” in the *Maintenance Manual* for the installation and removal of a PCIe adapter holder.
   - When a FL DW GPU adapter is installed in PCIe slot 1, only the same type of GPU can be installed in slot 3; different types of FL DW GPUs can be installed in slot 7 and then slot 5.
   - When there is only one FL GPU installed between PCIe slots 1 and 4 or between slots 5 and 8, one or two **FL GPU fillers** are required to be installed on the air baffle on the same side of the FL GPU for proper cooling and airflow.
   - See “GPU filler replacement” in the *Maintenance Manual* for the installation and removal of a FL GPU filler.
6. The installation of a **ThinkSystem NVIDIA A2/L4 GPU adapter** should follow the rules specified below:
   - When a ThinkSystem NVIDIA A2 or L4 GPU is installed—
     - **between PCIe slots 1 and 4:** the other slots between slots 1 and 4 only support low-profile PCIe adapters
     - **between PCIe slots 5 and 8:** the other slots between slots 5 and 8 only support low-profile PCIe adapters
     - The system does not support T4 GPU (T4 GPUs and A2/L4 GPUs cannot be installed in the system at the same time).
   - When one or more **A2/L4 GPUs** are installed between PCIe slots 1 and 4 or between PCIe slots 5 and 8, one or two **A2/L4 GPU air ducts** are required to be installed on the fan cage at the same side as the installed A2/L4 GPU for proper cooling and airflow. See “A2/L4 GPU air duct replacement” in the *Maintenance Manual* for the installation and removal of an A2/L4 GPU air duct.
   - A **T4 filler** is required to be installed on the server cover for proper cooling and airflow when one or more A2/L4/T4 GPU adapters are installed. See “T4 filler replacement” in the *Maintenance Manual* for the installation and removal of a T4 filler.
7. Active GPUs can be installed in PCIe slots 1, 3, 5, and 7; ThinkSystem NVIDIA A2/L4 GPUs can be installed in PCIe slots 1 to 8.

Notes:

- When A2/L4 GPU(s) are installed, up to four drive backplanes are supported.
- When other types of GPUs are installed, only up to two backplanes or backplates are supported, and no optical drive or tape drive can be installed.
- One PSU configuration does not support GPU greater or equal to 70W.

Technical rules for memory modules

Memory modules must be installed in a specific order based on the memory configuration that you implement on your server.

For a list of supported memory options, see: https://serverproven.lenovo.com/

Memory installation requirements:

- A label on each DIMM identifies the DIMM type. This information is in the format **xxxxx *n*Rxxx PC4-xxxxx-xx-xx-xxx**. Where ***n*** indicates if the DIMM is single-rank (n=1) or dual-rank (n=2).
- At least one DIMM is required for each processor. Install at least six DIMMs per processor for good performance.
- When you replace a DIMM, the server provides automatic DIMM enablement capability without requiring you to use the Setup utility to enable the new DIMM manually.
- All DIMMs must be either all RDIMMs, or DDR4 and PMEMs.
- Mixing x4 and x8 DIMMs in the same channel is allowed.
- Install DIMMs of the same speed for optimal performance. Otherwise, the BIOS will find and run the lowest speed among all channels.
- Always populate DIMMs with the maximum number of ranks in the farthest DIMM slot, followed by the nearest DIMM slot.
- Memory modules from different vendors are supported.
- The following table includes all the feasible combinations of different types of DIMMs:

Table 16. DIMM compatibility

DIMM Types	RDIMM	3DS RDIMM	PMEMs
RDIMM	V	X	V
3DS RDIMM	X	V	V
PMEMs	V	V	X

See the following to locate the DIMM slots and corresponding channels.

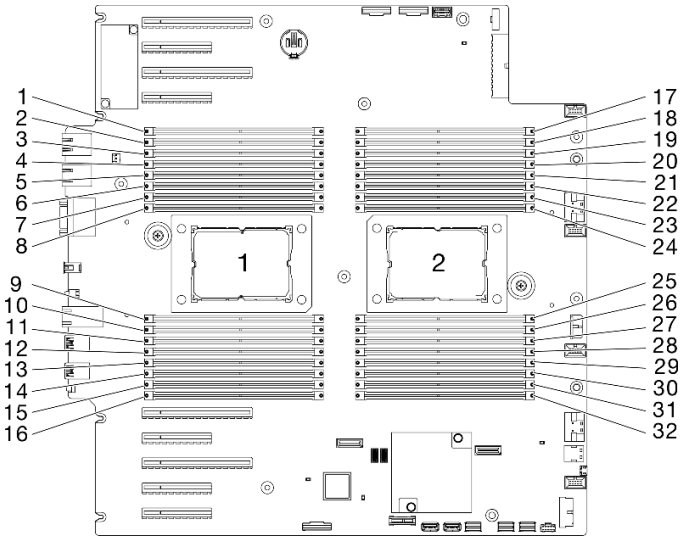

Figure 35. Processor and memory module layout

Table 17. Channel and slot information of DIMMs around processor

Memory controllers	**Controller 2**				**Controller 3**				**Controller 1**				**Controller 0**			
Channels	**Channel 1 (F)**		**Channel 1 (E)**		**Channel 1 (H)**		**Channel 0 (G)**		**Channel 0 (C)**		**Channel 1 (D)**		**Channel 1 (A)**		**Channel 1 (B)**	
Slots	1	0	1	0	1	0	1	0	1	0	1	0	1	0	1	0
DIMM numbers (processor 1)	2	1	4	3	6	5	8	7	9	10	11	12	13	14	15	16
DIMM numbers (processor 2)	31	32	29	30	27	28	25	26	24	23	22	21	20	19	18	17

DRAM DIMM installation order

This section contains information of how to install DRAM DIMMs properly.

Independent memory mode

In independent memory mode, memory channels can be populated with DIMMs in any order and you can populate all channels for each processor in any order with no matching requirements. Independent memory mode provides the highest level of memory performance, but lacks failover protection. The DIMM installation order for independent memory mode varies based on the number of processors and memory modules installed in the server.

Attention: Independent memory mode guidelines:

- There should be at least one memory module per processor.
- If only one DIMM is populated in a channel, populate it in the slot furthest away from CPU of that channel.
- Always populate DIMMs with a higher electrical loading in slot 0 followed by slot 1.
  - When single or dual rank RDIMMs are populated for 2DPC, always populate the higher quantity rank DIMM first in the farthest DIMM slot, followed by the nearest DIMM slot.
  - If two DIMMs on a channel have identical ranks, then populate the one with the higher capacity on slot 0.
- A maximum of 8 logical ranks (ranks seen by the host) per channel is allowed.

- A maximum of two different types (capacity) is supported per system.
- Channel A, C, E, G (DIMM slot 14, 13, 10, 9, 3, 4, 7, and 8) must be populated with the same total capacity per channel if populated.
- Channel B, D, F, H (DIMM slot 16, 15, 12, 11, 1, 2, 5, and 6) must be populated with the same total capacity per channel if populated, but can be populated different from channel A, C, E, G (DIMM slot 14, 13, 10, 9, 3, 4, 7, and 8).
- Memory population must be identical on all CPUs.

Note: When adding one or more DIMMs during a memory upgrade, you might need to remove some DIMMs that are already installed to new locations.

Independent memory mode with one processor and same capacity memory modules

Table 18. Independent memory mode with one processor and same capacity memory modules

Total DIMMs	Processor 1																Total DIMMs
	1	2	3	4	5	6	7	8	9	10	11	12	13	14	15	16	
1														14			**1**
2										10				14			**2**
4[1]			3				7			10				14			**4[1]**
6	1		3				7			10				14		16	**6**
8[1,2]	1		3		5		7			10		12		14		16	**8[1,2]**
12	1	2	3	4			7	8	9	10			13	14	15	16	**12**
16[1,2]	1	2	3	4	5	6	7	8	9	10	11	12	13	14	15	16	**16[1,2]**

Notes:

1. DIMM configurations that support Sub NUMA Clustering (SNC), which can be enabled via UEFI.
2. DIMM configurations that support Software Guard Extensions (SGX), see "Enable Software Guard Extensions (SGX)" on page 165 to enable this feature.

Independent memory mode with one processor and different capacity memory modules

Table 19. Independent memory mode with one processor and different capacity memory modules

Total DIMMs	Processor 1																Total DIMMs
	1	2	3	4	5	6	7	8	9	10	11	12	13	14	15	16	
2												12		14			**2**
4			3		5							12		14			**4**
8[1,2]	1		3		5		7			10		12		14		16	**8[1,2]**
12[1,2]	1		3	4	5		7	8	9	10		12	13	14		16	**12[1,2]**
16[1,2]	1	2	3	4	5	6	7	8	9	10	11	12	13	14	15	16	**16[1,2]**

Notes:

1. DIMM configurations that support Sub NUMA Clustering (SNC), which can be enabled via UEFI.
2. DIMM configurations that support Software Guard Extensions (SGX), see "Enable Software Guard Extensions (SGX)" on page 165 to enable this feature.

Independent memory mode with two processors and same capacity memory modules

Table 20. Independent mode with two processors and same capacity memory modules (processor 1)

Total DIMMs	Processor 1																Total DIMMs
	1	2	3	4	5	6	7	8	9	10	11	12	13	14	15	16	
2														14			**2**
4										10				14			**4**
8[1]			3				7			10				14			**8[1]**
12	1		3				7			10				14		16	**12**
16[1,2]	1		3		5		7			10		12		14		16	**16[1,2]**
24	1	2	3	4			7	8	9	10			13	14	15	16	**24**
32[1,2]	1	2	3	4	5	6	7	8	9	10	11	12	13	14	15	16	**32[1,2]**

Table 21. Independent mode with two processors and same capacity memory modules (processor 2)

Total DIMMs	Processor 2																Total DIMMs
	17	18	19	20	21	22	23	24	25	26	27	28	29	30	31	32	
2			19														**2**
4			19				23										**4**
8[1]			19				23			26				30			**8[1]**
12	17		19				23			26				30		32	**12**
16[1,2]	17		19		21		23			26		28		30		32	**16[1,2]**
24	17	18	19	20			23	24	25	26			29	30	31	32	**24**
32[1,2]	17	18	19	20	21	22	23	24	25	26	27	28	29	30	31	32	**32[1,2]**

Notes:

1. DIMM configurations that support Sub NUMA Clustering (SNC), which can be enabled via UEFI.
2. DIMM configurations that support Software Guard Extensions (SGX), see "Enable Software Guard Extensions (SGX)" on page 165 to enable this feature.

Independent memory mode with two processors and different capacity memory modules

Table 22. Independent mode with two processors and different capacity memory modules (processor 1)

Total DIMMs	Processor 1																Total DIMMs
	1	2	3	4	5	6	7	8	9	10	11	12	13	14	15	16	
4												12		14			**4**
8			3		5							12		14			**8**
16[1,2]	1		3		5		7			10		12		14		16	**16[1,2]**
24[1,2]	1		3	4	5		7	8	9	10		12	13	14		16	**24[1,2]**
32[1,2]	1	2	3	4	5	6	7	8	9	10	11	12	13	14	15	16	**32[1,2]**

Table 23. Independent mode with two processors and different capacity memory modules (processor 2)

Total DIMMs	Processor 2																Total DIMMs
	17	**18**	**19**	**20**	**21**	**22**	**23**	**24**	**25**	**26**	**27**	**28**	**29**	**30**	**31**	**32**	
4			19		21												**4**
8			19		21							28		30			**8**
16[1,2]	17		19		21		23			26		28		30		32	**16[1,2]**
24[1,2]	17		19	20	21		23	24	25	26		28	29	30		32	**24[1,2]**
32[1,2]	17	18	19	20	21	22	23	24	25	26	27	28	29	30	31	32	**32[1,2]**

Notes:

1. DIMM configurations that support Sub NUMA Clustering (SNC), which can be enabled via UEFI.
2. DIMM configurations that support Software Guard Extensions (SGX), see "Enable Software Guard Extensions (SGX)" on page 165 to enable this feature.

Memory mirroring mode

Memory-mirroring mode provides full memory redundancy while reducing the total system memory capacity in half. Memory channels are grouped in pairs with each channel receiving the same data. If a failure occurs, the memory controller switches from the DIMMs on the primary channel to the DIMMs on the backup channel. The DIMM installation order for memory mirroring varies based on the number of processors and DIMMs installed in the server.

Attention: Memory mirroring guidelines:

- Mirroring can be configured across two channels.
- Both channels must be populated in each iMC.
- The total memory size of the primary and secondary channels must be the same.
- Memory mirroring is supported when PMEMs are installed and set to 100% App Direct Mode.
- Memory mirroring mode is limited to DDR4 memory modules only, PMEM memory mirroring is not supported in App Direct Mode.

Channels	**Channel 0**		**Channel 1**	
Slots	**Slot 1**	**Slot 0**	**Slot 1**	**Slot 0**
Identical DIMM installation required		**Y**		**Y**
Identical DIMM installation required for full channel mirroring	**Y**	**Y**	**Y**	**Y**

Note: When adding one or more DIMMs during a memory upgrade, you might need to remove some DIMMs that are already installed to new locations.

Mirror memory mode with one processor

Table 24. Mirror mode with one processor

Total DIMMs	Processor 1																Total DIMMs
	1	**2**	**3**	**4**	**5**	**6**	**7**	**8**	**9**	**10**	**11**	**12**	**13**	**14**	**15**	**16**	
8*	1		3		5		7			10		12		14		16	**8***
16*	1	2	3	4	5	6	7	8	9	10	11	12	13	14	15	16	**16***

Note: DIMM configurations with an asterisk (*) listed in the table support the Sub NUMA Clustering (SNC) feature, which can be enabled via UEFI. SNC is not supported if DIMM population does not follow the sequence indicated by the table above.

Mirror memory mode with two processors

Table 25. Mirror mode with two processors (processor 1)

Total DIMMs	Processor 1																Total DIMMs
	1	**2**	**3**	**4**	**5**	**6**	**7**	**8**	**9**	**10**	**11**	**12**	**13**	**14**	**15**	**16**	
16*	1		3		5		7			10		12		14		16	**16***
32*	1	2	3	4	5	6	7	8	9	10	11	12	13	14	15	16	**32***

Table 26. Mirror mode with two processors (processor 2)

Total DIMMs	Processor 2																Total DIMMs
	17	**18**	**19**	**20**	**21**	**22**	**23**	**24**	**25**	**26**	**27**	**28**	**29**	**30**	**31**	**32**	
16*	17		19		21		23			26		28		30		32	**16***
32*	17	18	19	20	21	22	23	24	25	26	27	28	29	30	31	32	**32***

Note: DIMM configurations with an asterisk (*) listed in the table support the Sub NUMA Clustering (SNC) feature, which can be enabled via UEFI. SNC is not supported if DIMM population does not follow the sequence indicated by the table above.

PMEM and DRAM DIMM installation order

This section contains information of how to install PMEMs and DRAM DIMMs properly.

When PMEMs and DRAM DIMMs are mixed in the system, the following modes are supported:

- "PMem installation: App Direct Mode" on page 75
- "PMem installation: Memory Mode" on page 76

See the following topics to learn how to set up and configure PMEMs.

- "PMEM rules" on page 71
- "Setting up the system for PMEM for the first time" on page 71
- "PMEM Management options" on page 71
- "Adding or replacing PMEMs in App Direct Mode" on page 74

PMEM rules

Make sure to meet the following requirements when applying PMEMs in the system.

- All the PMEMs that are installed must be of the same part number.
- All the DRAM DIMMs that are installed must be of the same type, rank, and capacity with minimum capacity of 16 GB. It is recommended to use Lenovo DRAM DIMMs with the same part number.
- Supported types of DRAM DIMMs and capacity vary with processors:
  - Processors with model name ending in **H**:
    - DRAM: 32/64 GB RDIMMs
    - PMEM: 128 GB
  - Processors with model name ending in **HL**:
    - DRAM: 128 GB 3DS RDIMMs
    - PMEM: 128, 256 or 512 GB

Setting up the system for PMEM for the first time

Complete the following steps when installing PMEMs to the system for the first time.

1. Consider "PMEM rules" on page 71 and acquire the PMEMs and DRAM DIMMs that meet the requirements.
2. Remove all the memory modules that are presently installed (see "Remove a memory module" in *Maintenance Manual*).
3. Follow the adopted combination to install all the PMEMs and DRAM DIMMs (see "Install a memory module" on page 124).
4. Disable security on all the installed PMEMs (see "PMEM Management options" on page 71).
5. Make sure the PMEM firmware is the latest version. If not, update it to the latest version (see https://sysmgt.lenovofiles.com/help/topic/com.lenovo.lxca.doc/update_fw.html).
6. Configure the PMEMs so that the capacity is available for use (see "PMEM Management options" on page 71).

PMEM Management options

PMEMs can be managed with the following tools:

- **Lenovo XClarity Provisioning Manager (LXPM)**

  To open LXPM, power on the system and press the key specified in the on-screen instructions as soon as the logo screen appears. If a password has been set, enter the password to unlock LXPM. For more

information, see the “Startup” section in the LXPM documentation compatible with your server at https://pubs.lenovo.com/lxpm-overview/.

Go to **UEFI Setup → System Settings → Intel Optane PMEMs** to configure and manage PMEMs.

For more details, see the “UEFI setup” section in the LXPM documentation compatible with your server at https://pubs.lenovo.com/lxpm-overview/.

Note: If the text-based interface of Setup Utility opens instead of LXPM, go to **System Settings → <F1> Start Control** and select **Tool Suite**. Then, reboot the system, and as soon as the logo screen appears, press the key specified in the on-screen instructions to open LXPM. (For more information, see the “Startup” section in the LXPM documentation compatible with your server at https://pubs.lenovo.com/lxpm-overview/.)

- **Setup Utility**

  To enter Setup Utility:

  1. Power on the system and press the key specified in the on-screen instructions to open LXPM.

     (For more information, see the “Startup” section in the LXPM documentation compatible with your server at https://pubs.lenovo.com/lxpm-overview/.)
  2. Go to **UEFI Settings → System Settings**, click on the pull-down menu on the upper right corner of the screen, and select **Text Setup**.
  3. Reboot the system, and as soon as the logo screen appears, press the key specified in the on-screen instructions.

  Go to **System Configuration and Boot Management → System Settings → Intel Optane PMEMs** to configure and manage PMEMs.

- **Lenovo XClarity Essentials OneCLI**

  Some management options are available in commands that are executed in the path of Lenovo XClarity Essentials OneCLI in the operating system. See https://pubs.lenovo.com/lxce-onecli/download_use_onecli to learn how to download and use Lenovo XClarity Essentials OneCLI.

Following are the available management options:

- **Intel Optane PMEMs details**

  Select this option to view the following details concerning each of the installed PMEMs:

  – Number of Intel Optane PMEMs detected
  – Total raw capacity
  – Total memory capacity
  – Total App Direct capacity
  – Total unconfigured capacity
  – Total inaccessible capacity
  – Total reserved capacity

  Alternatively, view PMEM details with the following command in OneCLI:

  ```
  OneCli.exe config show IntelOptanePMEM --bmc XCC_Account:XCC_Password@XCC_IP
  ```

  Notes:
  – *XCC_Account* stands for XCC user ID.
  – *XCC_Password* stands for XCC user password.
  – *XCC_IP* stands for XCC IP address.

- **Regions**

After the memory percentage is set and the system is rebooted, regions for the App Direct capacity will be generated automatically. Select this option to view the App Direct regions per processor.

- **Namespaces**

  App Direct capacity of PMEMs requires the following steps before it is truly available for applications.

  1. Namespaces must be created for region capacity allocation.
  2. Filesystem must be created and formatted for the namespaces in the operating system.

  Each App Direct region can be allocated into one namespace. Create namespaces in the following operating systems:

  – Windows: Use *powershell* command. To create a namespace, use Windows Server 2019 or later versions.
  – Linux: Use *ndctl* command.
  – VMware: Reboot the system, and VMware will create namespaces automatically.

  After creating namespaces for App Direct capacity allocation, make sure to create and format filesystem in the operating system so that the App Direct capacity is accessible for applications.

- **Security**

  – Enable Security

    Attention: By default, PMEM security is disabled. Before enabling security, make sure all the country or local legal requirements regarding data encryption and trade compliance are met. Violation could cause legal issues.

    PMEMs can be secured with passphrases. Two types of passphrase protection scope are available for PMEM:

    – **Platform:** Choose this option to run security operation on all the installed PMEM units at once. A platform passphrase is stored and automatically applied to unlock PMEMs before operating system starts running, but the passphrase still has to be disabled manually for secure erase.

      Alternatively, enable/disable platform level security with the following commands in OneCLI:

      - Enable security:
        1. Enable security.
           ```
           onecli.exe config set IntelOptanePMEM.SecurityOperation "Enable Security" --imm
           USERID:PASSWORD@10.104.195.86
           ```
        2. Set the security passphrase.
           ```
           onecli.exe config set IntelOptanePMEM.SecurityPassphrase "123456" --imm
           USERID:PASSWORD@10.104.195.86 --imm USERID:PASSWORD@10.104.195.86
           ```

           Where *123456* stands for the passphrase.
        3. Reboot the system.
      - Disable security:
        1. Disable security.
           ```
           onecli.exe config set IntelOptanePMEM.SecurityOperation "Disable Security" --imm
           USERID:PASSWORD@10.104.195.86
           ```
        2. Enter passphrase.
           ```
           onecli.exe config set IntelOptanePMEM.SecurityPassphrase "123456" --imm
           USERID:PASSWORD@10.104.195.86
           ```
        3. Reboot the system.

    – **Single PMEM:** Choose this option to run security operation on one or more selected PMEM units.

Notes:

- Single PMEM passphrases are not stored in the system, and security of the locked units needs to be disabled before the units are available for access or secure erase.
- Always make sure to keep records of the slot number of locked PMEMs and corresponding passphrases. In the case the passphrases are lost or forgotten, the stored data cannot be backed up or restored, but you can contact Lenovo service for administrative secure erase.
- After three failed unlocking attempts, the corresponding PMEMs enter “exceeded” state with a system warning message, and the PMEM unit can only be unlocked after the system is rebooted.

To enable passphrase, go to **Security → Press to Enable Security**.

– Secure Erase

Notes:

– Password is required to perform Secure Erase when security enabled.

– Before executing secure erase, make sure ARS (Address Range Scrub) is done on all PMEMs or on the specific PMEMs selected. Otherwise, secure erase cannot be started on all PMEMs or the specific PMEM selected, and the following text message will pop out:

```
The passphrase is incorrect for single or multiple or all Intel Optane PMEMs selected, or maybe there is
namespace on the selected PMEMs. Secure erase operation is not done on all Intel Optane PMEMs selected.
```

Secure erase cleanses all the data that is stored in the PMEM unit, including encrypted data. This data deletion method is recommended before returning or disposing a malfunctioning unit, or changing PMEM mode. To perform secure erase, go to **Security → Press to Secure Erase**.

Alternatively, perform platform level secure erase with the following command in OneCLI:

```
OneCli.exe config set IntelOptanePMEM.SecurityOperation "Secure Erase Without Passphrase" --bmc
USERID:PASSWORD@10.104.195.86
```

- **PMEM Configuration**

PMEM contains spared internal cells to stand in for the failed ones. When the spared cells are exhausted to 0%, there will be an error message, and it is advised to back up data, collect service log, and contact Lenovo support.

There will also be a warning message when the percentage reaches 1% and a selectable percentage (10% by default). When this message appears, it is advised to back up data and run PMEM diagnostics (see the “Diagnostics” section in the LXPM documentation compatible with your server at https://pubs.lenovo.com/lxpm-overview/). To adjust the selectable percentage that the warning message requires, go to **Intel Optane PMEMs → PMEM Configuration**, and input the percentage.

Alternatively, change the selectable percentage with the following command in OneCLI:

```
onecli.exe config set IntelOptanePMEM.PercentageRemainingThresholds 20 --imm USERID:PASSWORD@10.104.195.86
```

Where *20* is the selectable percentage.

Adding or replacing PMEMs in App Direct Mode

Complete the following steps before adding or replacing PMEMs in App Direct Mode.

1. Back up stored data in PMEM namespaces.
2. Disable PMEM security with one of the following options:
   - **LXPM**

Go to **UEFI Setup → System Settings → Intel Optane PMEMs → Security → Press to Disable Security**, and input passphrase to disable security.

- **Setup Utility**

  Go to **System Configuration and Boot Management → System Settings → Intel Optane PMEMs → Security → Press to Disable Security**, and input passphrase to disable security.

3. Delete namespaces with command corresponding to the operating system that is installed:
   - **Linux** command:

     ```
     ndctl destroy-namespace all -f
     ```

   - **Windows** Powershell command
     ```
     Get-PmemDisk | Remove-PmemDisk
     ```
4. Clear Platform Configuration Data (PCD) and Namespace Label Storage Area (LSA) with the following ipmctl command (for both Linux and Windows).
   ```
   ipmctl delete -pcd
   ```

   Notes: See the following links to learn how to download and use impctl in different operating systems:

   - Windows: https://datacentersupport.lenovo.com/us/en/videos/YTV101407
   - Linux: https://datacentersupport.lenovo.com/us/en/solutions/HT508642
5. Reboot the system.

PMem installation: App Direct Mode

In this mode, PMem act as independent and persistent memory resources directly accessible by specific applications, and DRAM DIMMs act as system memory.

App Direct Mode - one processor

Table 27. App Direct Mode with one processor

- **D**: DRAM DIMMs
- **P**: Persistent Memory Module (PMem)

Configuration	Processor 1							
	1	**2**	**3**	**4**	**5**	**6**	**7**	**8**
1 PMem and 6 DIMMs	D	D	D		**P**	D	D	D
2 PMems and 6 DIMMs	D	D	D	**P**	**P**	D	D	D

Table 28. Supported PMem capacity in App Direct Mode with one processor

Total PMems	**Total DIMMs**	**Processor Family**	**128 GB PMem**	**256 GB PMem**	**512 GB PMem**
1	**6**	**L**	√	√	√
		M	√	√	√
		Other	√	√	√
2	**6**	**L**	√	√	
		M	√	√	
		Other	√	√	

App Direct Mode - two processors

Table 29. App Direct Mode with two processors

- **D**: DRAM DIMMs
- **P**: Persistent Memory Module (PMem)

Configuration	Processor 1								Processor 2							
	1	**2**	**3**	**4**	**5**	**6**	**7**	**8**	**9**	**10**	**11**	**12**	**13**	**14**	**15**	**16**
1 PMem and 12 DIMMs	D	D	D		**P**	D	D	D	D	D	D			D	D	D
2 PMems and 12 DIMMs	D	D	D		**P**	D	D	D	D	D	D		**P**	D	D	D
4 PMems and 12 DIMMs	D	D	D	**P**	**P**	D	D	D	D	D	D	**P**	**P**	D	D	D

Table 30. Supported PMem capacity in App Direct Mode with two processors

Total PMems	Total DIMMs	Processor Family	128 GB PMem	256 GB PMem	512 GB PMem
1	**12**	**L**	√	√	√
		M	√	√	√
		Other	√	√	√
2	**12**	**L**	√	√	√
		M	√	√	√
		Other	√	√	
4	**12**	**L**	√	√	√
		M	√	√	
		Other	√		

PMem installation: Memory Mode

In this mode, PMems act as volatile system memory, while DRAM DIMMs act as cache.

Memory Mode - one processor

Table 31. Memory Mode with one processor

- **D**: DRAM DIMMs
- **P**: Persistent Memory Module (PMem)

Configuration	Processor 1							
	1	**2**	**3**	**4**	**5**	**6**	**7**	**8**
2 PMems and 6 DIMMs	D	D	D	**P**	**P**	D	D	D

Table 32. Supported PMem capacity in Memory Mode with one processor

Total PMems	Total DIMMs	Processor Family	128 GB PMem	256 GB PMem	512 GB PMem
2	**6**	**L**		√	√

Table 32. Supported PMem capacity in Memory Mode with one processor (continued)

		M		√	√
		Other		√	

Memory Mode - two processors

Table 33. Memory Mode with two processors

- **D**: DRAM DIMMs
- **P**: Persistent Memory Module (PMem)

Configuration	Processor 1								Processor 2							
	1	**2**	**3**	**4**	**5**	**6**	**7**	**18**	**9**	**10**	**11**	**12**	**13**	**14**	**15**	**16**
4 PMems and 12 DIMMs	D	D	D	**P**	**P**	D	D	D	D	D	D	**P**	**P**	D	D	D

Table 34. Supported PMem capacity in Memory Mode with two processors

Total PMems	**Total DIMMs**	**Processor Family**	**128 GB PMem**	**256 GB PMem**	**512 GB PMem**
4	**12**	**L**		√	√
		M		√	
		Other			

Technical rules for PCIe slots

PCIe adapters must be installed in a specific order based on the CPU configuration that you implement on your server.

Installation priority	**Component**	**PCIe slot priorities**
1	Double-wide GPU	One processor installed: 1, 3
		Two processor installed: 1, 3, 7, 5
2	Retimer	One processor installed: 1, 3
		Two processor installed: 7, 5, 1, 3
3	Single-wide GPU	One processor installed: 1, 3, 2
		Two processor installed: 1, 3, 7, 5, 2, 4, 6, 8
4	ThinkSystem RAID 940-32i 8GB Flash PCIe Gen4 12Gb Adapter	One processor installed: 9
		Two processor installed: 9, 5, 6, 7, 8
5	Internal 16i RAID adapter	One processor installed: 9, 1, 2, 3
		Two processor installed: 9, 1, 2, 3, 4, 5, 6, 7, 8
6	ThinkSystem RAID 930-24i 4GB Flash PCIe Adapter	One processor installed: 9
		Two processor installed: 9, 5, 6, 7, 8
7	Internal 8i RAID adapter	One processor installed: 9, 1, 2, 3

Installation priority	Component	PCIe slot priorities
		Two processor installed: 9, 1, 2, 3, 4, 5, 6, 7, 8
8	Internal HBA adapter	One processor installed: 1, 2, 3
		Two processor installed: 1, 2, 3, 4
9	Fiber channel ethernet adapter (x16 Gen4)	One processor installed: 1, 3
		Two processor installed: 1, 3, 7, 5
10	RJ45 ethernet network adapter	One processor installed: 9, 2, 3
		Two processor installed: 9, 2, 3, 4, 6, 7, 8
11	External RAID/HBA adapter	One processor installed: 9, 1, 2, 3
		Two processor installed: 9, 1, 2, 3, 4, 5, 6, 7, 8
12	Fiber channel ethernet adapter (x4/x8)	One processor installed: 9, 1, 2, 3
		Two processor installed: 9, 1, 2, 3, 4, 5, 6, 7, 8

Notes:

- ThinkSystem RAID 940-32i 8GB Flash PCIe Gen4 12Gb Adapter can only be installed in slot 9 in one CPU configurations, and installed in slot 9, 5, 6, 7, or 8 in two CPU configurations.
- ThinkSystem RAID 540-8i PCIe Gen4 12Gb Adapter cannot be mixed with other RAID/HBA.
- GPU RTX A6000 can only be installed in PCIe slot 1, 3, 5, and 7. PCIe slot 2, 4, 6, and 8 will be left unoccupied.
- Mixing GPUs in the same zone are not supported:
  - When a GPU is installed in PCIe slot 1, 2, 3, or 4; only the same GPU can be installed in PCIe slot 1, 2, 3, or 4.
  - When a GPU is installed in PCIe slot 5, 6, 7, or 8; only the same GPU can be installed in PCIe slot 5, 6, 7, or 8.
- When a RTX A6000/RTX 4000 GPU is installed in PCIe slot 1, 2, 3, or 4; RAID/HBA adapters cannot be installed in PCIe slot 1, 2, 3, or 4.
- When a RTX A6000/RTX 4000 GPU is installed in PCIe slot 5, 6, 7, or 8; RAID/HBA adapters cannot be installed in PCIe slot 5, 6, 7, or 8.

Technical rules for system fans

Your server supports two types of fans:

- Single rotor 9238 hot-swap fans
- Dual rotor 9256 hot-swap fans

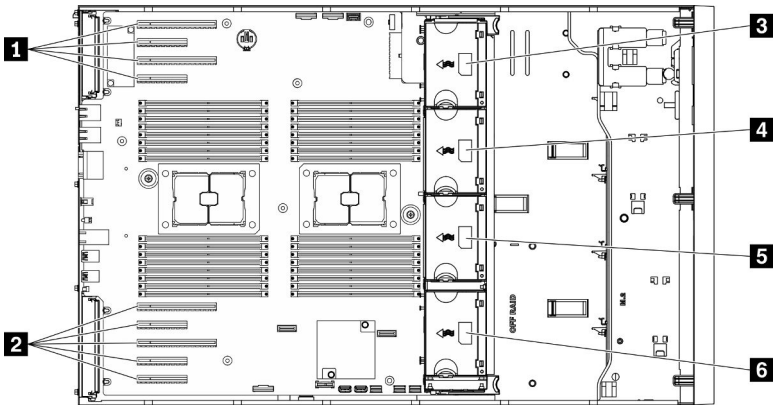

Figure 36. Fan slot locations

Table 35. Fan and PCIe slot locations

1 PCIe slot 1-4	4 Fan slot 3
2 PCIe slot 5-9	5 Fan slot 2
3 Fan slot 4	6 Fan slot 1

Attention: Either type of hot-swap fan in fan slot 4 would spin at 10% duty when in standby.

One processor

Table 36. One processor fan configuration

Fan configuration	Description
• Three single rotor fans in fan slot 1, 2, and 4. • One fan filler in fan slot 3.	1. Supports one CPU with TDP less than 205W. 2. Supports RDIMM with 64 GB or less. 3. PMEM is not supported. 4. GPU adapters are not supported. 5. Supports up to sixteen 2.5-inch SAS/SATA drives (i.e., two 2.5-inch backplanes). 6. Supports up to eight 3.5-inch SAS/SATA drives (i.e., two 3.5-inch backplanes). 7. Supports ThinkSystem M.2 SATA 2-Bay RAID Enablement Kit. 8. Supports ThinkSystem M.2 SATA/NVMe 2-Bay Enablement Kit. 9. Fan redundancy is not supported.

• Three dual rotor fans in fan slot 1, 2, and 4.
• One fan filler in fan slot 3.
	1. All CPU SKUs are supported.
	2. Supports RDIMM with 128 GB or less.
	3. Supports PMEM.
	4. Supports GPU adapters.
	  • Supports up to three single-width GPUs.
	  • Supports up to two double-width GPUs.
	5. Supports up to sixteen 2.5-inch SAS/SATA drives (i.e., two 2.5-inch backplanes).
	6. Supports up to eight 3.5-inch SAS/SATA/NVMe drives (i.e., two 3.5-inch backplanes).
	7. Supports ThinkSystem M.2 SATA 2-Bay RAID Enablement Kit.
	8. Supports ThinkSystem M.2 NVMe 2-Bay RAID Enablement Kit.
	9. Supports ThinkSystem M.2 SATA/NVMe 2-Bay Enablement Kit.
	10. Supports fan redundancy.

Four single rotor fans in fan slot 1, 2, 3, and 4.	1. Supports one CPU with TDP less than 205W. 2. Supports RDIMM with 64 GB or less. 3. PMEM is not supported. 4. GPU adapters are not supported. 5. Supports up to thirty-two 2.5-inch SAS/SATA drives (i.e., four 2.5-inch backplanes). 6. Supports up to sixteen 3.5-inch SAS/SATA drives (i.e., four 3.5-inch backplanes). 7. Supports ThinkSystem M.2 SATA 2-Bay RAID Enablement Kit. 8. Supports ThinkSystem M.2 SATA/NVMe 2-Bay Enablement Kit. 9. Fan redundancy is not supported.

Table 36. One processor fan configuration (continued)

Fan configuration	Description
Four dual rotor fans in fan slot 1, 2, 3, and 4.	1. Supports one CPU with TDP less than 250W. 2. Supports RDIMM with 64 GB or less. 3. Supports PMEM. 4. Supports up to three A2 or L4 GPU adapters 5. Supports up to thirty-two 2.5-inch SAS/SATA drives (i.e., four 2.5-inch backplanes). 6. Supports up to sixteen 3.5-inch SAS/SATA/NVMe drives (i.e., four 3.5-inch backplanes). 7. Supports ThinkSystem M.2 SATA 2-Bay RAID Enablement Kit. 8. Supports ThinkSystem M.2 NVMe 2-Bay RAID Enablement Kit. 9. Supports ThinkSystem M.2 SATA/NVMe 2-Bay Enablement Kit. 10. Supports fan redundancy.
Four dual rotor fans in fan slot 1, 2, 3, and 4.	1. All CPU SKUs are supported. 2. Supports RDIMM with 128 GB or less. 3. Supports PMEM. 4. Supports GPU adapters. • Up to eight single-width GPUs, when there are only SW GPUs installed in the system. • Up to four double-width GPUs, when there are only DW GPUs installed in the system. • Up to four single-width GPUs and up to two double-width GPUs, when there are both SW and DW GPUs installed in the system. 5. Supports up to sixteen 2.5-inch SAS/SATA drives (i.e., two 2.5-inch backplanes). 6. Supports up to eight 3.5-inch SAS/SATA/NVMe drives (i.e., two 3.5-inch backplanes). 7. Supports ThinkSystem M.2 SATA 2-Bay RAID Enablement Kit. 8. Supports ThinkSystem M.2 NVMe 2-Bay RAID Enablement Kit. 9. Supports ThinkSystem M.2 SATA/NVMe 2-Bay Enablement Kit. 10. Supports fan redundancy.

Two processors

Table 37. Two processor fan configuration

Fan configuration	Description
Four single rotor fans in fan slot 1, 2, 3, and 4.	1. Supports two CPUs with TDP less than 205W. 2. Supports RDIMM with 64 GB or less. 3. PMEM is not supported. 4. GPU adapters are not supported. 5. Supports up to thirty-two 2.5-inch SAS/SATA drives (i.e., four 2.5-inch backplanes). 6. Supports up to sixteen 3.5-inch SAS/SATA drives (i.e., four 2.5-inch backplanes). 7. Supports ThinkSystem M.2 SATA 2-Bay RAID Enablement Kit. 8. Supports ThinkSystem M.2 SATA/NVMe 2-Bay Enablement Kit. 9. Fan redundancy is not supported.
Four dual rotor fans in fan slot 1, 2, 3, and 4.	1. Supports two CPUs with TDP less than 250W. 2. Supports RDIMM with 64 GB or less. 3. Supports PMEM. 4. Supports up to eight A2 or L4 GPU adapters. 5. GPU adapters are not supported. 6. Supports up to thirty-two 2.5-inch SAS/SATA/NVMe drives (i.e., four 2.5-inch backplanes). 7. Supports up to sixteen 3.5-inch SAS/SATA/NVMe drives (i.e., four 3.5-inch backplanes). 8. Supports ThinkSystem M.2 SATA 2-Bay RAID Enablement Kit. 9. Supports ThinkSystem M.2 NVMe 2-Bay RAID Enablement Kit. 10. Supports ThinkSystem M.2 SATA/NVMe 2-Bay Enablement Kit. 11. Supports fan redundancy.
Four dual rotor fans in fan slot 1, 2, 3, and 4.	1. All CPU SKUs are supported. 2. Supports RDIMM with 128 GB or less. 3. Supports PMEM. 4. Supports GPU adapters. • Supports up to eight single-width GPUs. • Supports up to four double-width GPUs. • Supports up to four single-width GPUs and two double-width GPUs. 5. Supports up to sixteen 2.5-inch SAS/SATA/NVMe drives. 6. Supports up to eight 3.5-inch SAS/SATA/NVMe drives. 7. Supports ThinkSystem M.2 SATA 2-Bay RAID Enablement Kit. 8. Supports ThinkSystem M.2 NVMe 2-Bay RAID Enablement Kit. 9. Supports ThinkSystem M.2 SATA/NVMe 2-Bay Enablement Kit. 10. Supports fan redundancy.

Install server hardware options

This section has instructions for performing initial installation of optional hardware. Each component installation procedure references any tasks that need to be performed to gain access to the component being replaced.

Installation procedures are presented in the optimum sequence to minimize work.

Install a hot-swap power supply

Use this information to install a hot-swap power supply.

About this task

S001

DANGER

Electrical current from power, telephone, and communication cables is hazardous.
To avoid a shock hazard:

- **Connect all power cords to a properly wired and grounded electrical outlet/source.**
- **Connect any equipment that will be attached to this product to properly wired outlets/sources.**
- **When possible, use one hand only to connect or disconnect signal cables.**
- **Never turn on any equipment when there is evidence of fire, water, or structural damage.**
- **The device might have more than one power cord, to remove all electrical current from the device, ensure that all power cords are disconnected from the power source.**

S002

CAUTION:
The power-control button on the device and the power switch on the power supply do not turn off the electrical current supplied to the device. The device also might have more than one power cord. To remove all electrical current from the device, ensure that all power cords are disconnected from the power source.

S033

CAUTION:
Hazardous energy present. Voltages with hazardous energy might cause heating when shorted with metal, which might result in spattered metal, burns, or both.

Attention:

- Read "Installation guidelines" on page 60 to ensure that you work safely.
- Prevent exposure to static electricity, which might lead to system halt and loss of data, by keeping static-sensitive components in their static-protective packages until installation, and handling these devices with an electrostatic-discharge wrist strap or other grounding system.

The following tips describe the type of power supply that the server supports and other information that you must consider when you install a power supply:

- The standard shipping has only one power supply installed in the server. For redundancy and hot-swap support, you must install an additional hot-swap power supply. Certain customized models might be shipped with two power supplies installed.
- Ensure that the devices that you are installing are supported. For a list of supported optional devices for the server, go to: https://serverproven.lenovo.com/

  CAUTION:

  1. **240 V dc input (input range: 180-300 V dc) is ONLY supported in Chinese Mainland.**
  2. **Power supplies with 240 V dc are not hot-swappable. To remove the power cord, ensure you have turned off the server or disconnected the dc power sources at the breaker panel.**
  3. **In order for the ThinkSystem products to operate error free in both a DC or AC electrical environment, a TN-S earthing system which complies to 60364-1 IEC 2005 standard has to be present or installed.**

  Notes:

  – Ensure that the two power supplies installed on the server have the same wattage.
  – If you are replacing the existing power supply with a new power supply of different wattage, attach the power information label that comes with this option onto the existing label near the power supply.

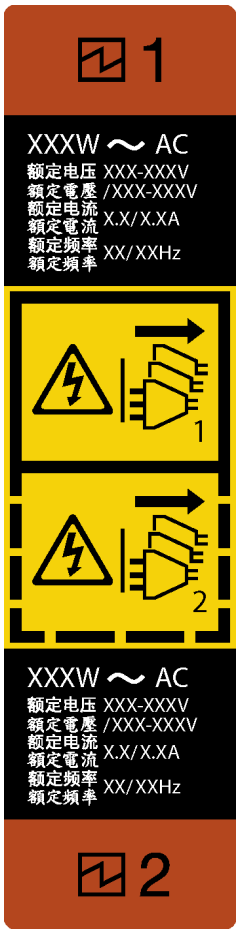

Figure 37. Hot-swap power supply label

在直流输入状态下，若电源供应器插座不支持热插拔功能，请务必不要对设备电源线进行热插拔，此操作可能导致设备损坏及数据丢失。因错误执行热插拔导致的设备故障或损坏，不属于保修范围。

NEVER CONNECT AND DISCONNECT THE POWER SUPPLY CABLE AND EQUIPMENT WHILE YOUR EQUIPMENT IS POWERED ON WITH DC SUPPLY (hot-plugging). Otherwise you may damage the equipment and result in data loss, the damages and losses result from incorrect operation of the equipment will not be covered by the manufacturers' warranty.

Step 1. If there is a power-supply-bay filler installed, remove it.

Step 2. Note the orientation of the hot-swap power supply; then, slide it into the chassis until it snaps into position.

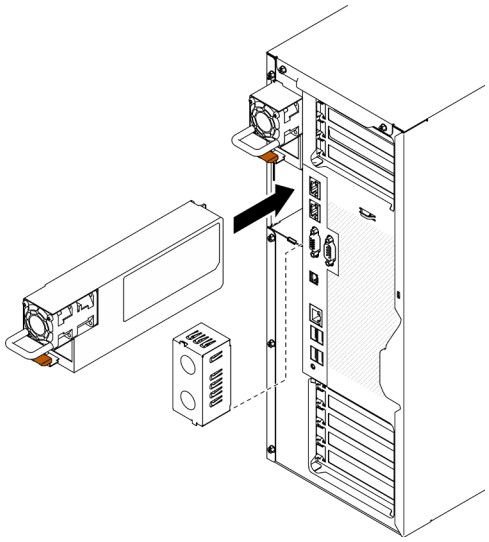

Figure 38. Hot-swap power supply installation

Demo video

Watch the procedure on YouTube

Remove the security door

Use this information to remove the security door.

About this task

S033

CAUTION:
Hazardous energy present. Voltages with hazardous energy might cause heating when shorted with metal, which might result in spattered metal, burns, or both.

Attention:

- Read "Installation guidelines" on page 60 to ensure that you work safely.
- Prevent exposure to static electricity, which might lead to system halt and loss of data, by keeping static-sensitive components in their static-protective packages until installation, and handling these devices with an electrostatic-discharge wrist strap or other grounding system.

Procedure

Step 1. Remove the security door.

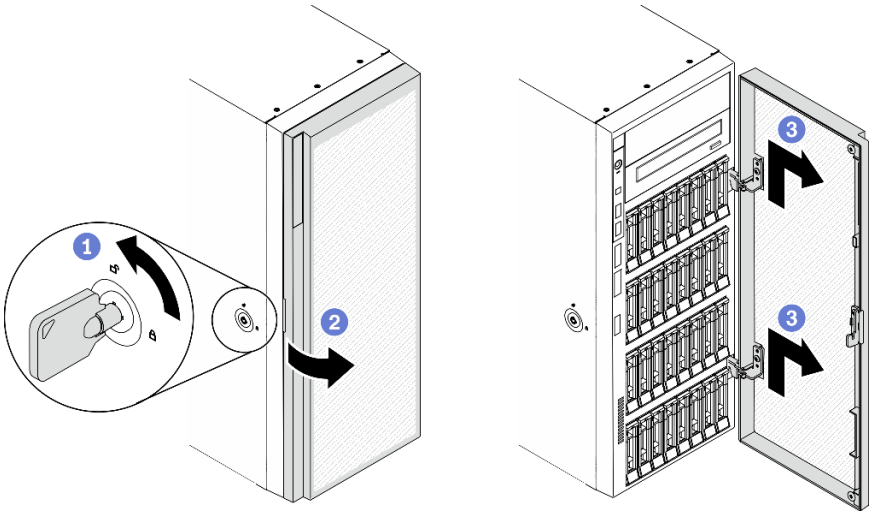

Figure 39. Security door removal

a. ❶ Use the key attached on the rear of the server to turn the cover lock to the unlocked position.

b. ❷ Open the security door.

c. ❸ Lift the security door slightly upward until you can completely remove it.

Demo video

Watch the procedure on YouTube

Remove the server cover

Use this information to remove the server cover.

About this task

S014

CAUTION:
Hazardous voltage, current, and energy levels might be present. Only a qualified service technician is authorized to remove the covers where the label is attached.

S017

CAUTION:
Hazardous moving fan blades nearby. Keep fingers and other body parts away.

S033

CAUTION:
Hazardous energy present. Voltages with hazardous energy might cause heating when shorted with metal, which might result in spattered metal, burns, or both.

Attention:

- Read "Installation guidelines" on page 60 to ensure that you work safely.
- Prevent exposure to static electricity, which might lead to system halt and loss of data, by keeping static-sensitive components in their static-protective packages until installation, and handling these devices with an electrostatic-discharge wrist strap or other grounding system.
- If the server is in a rack, remove it from the rack.

Procedure

Step 1. Remove the server cover.

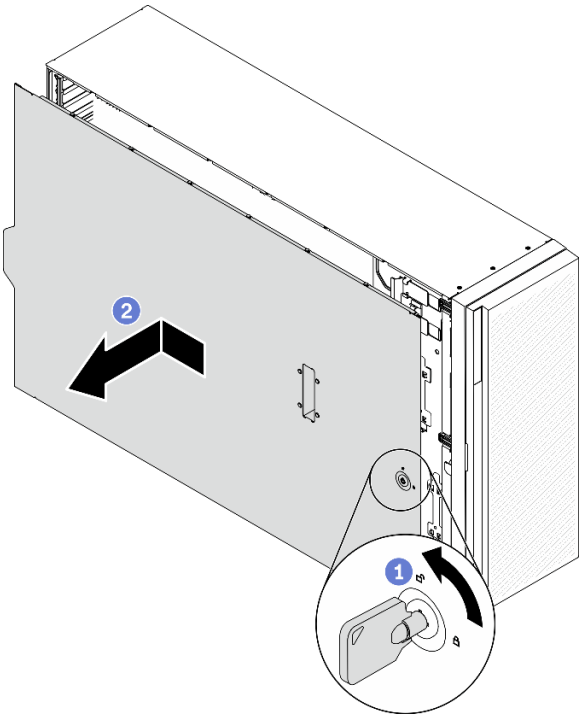

Figure 40. Server cover removal

Attention: For proper cooling, always install the server cover before powering on the server. Operating the server without the cover properly installed might result in server component damage.

a. ❶ Use the key attached on the rear of the server to turn the cover lock to the unlocked position.

b. ❷ Slide the server cover towards the rear of the server until the server cover is disengaged from the chassis. Then, lift the server cover off the chassis and place it on a flat clean surface.

Demo video

Watch the procedure on YouTube

Remove the front bezel

Use this information to remove the front bezel.

About this task

S033

CAUTION:
Hazardous energy present. Voltages with hazardous energy might cause heating when shorted with metal, which might result in spattered metal, burns, or both.

Attention:

- Read "Installation guidelines" on page 60 to ensure that you work safely.
- Prevent exposure to static electricity, which might lead to system halt and loss of data, by keeping static-sensitive components in their static-protective packages until installation, and handling these devices with an electrostatic-discharge wrist strap or other grounding system.
- If the server is in a rack, remove it from the rack.
- If foot stands are installed on the server, rotate them inwards and lay the server on its side for easier operation.

Procedure

Step 1. Remove the front bezel.

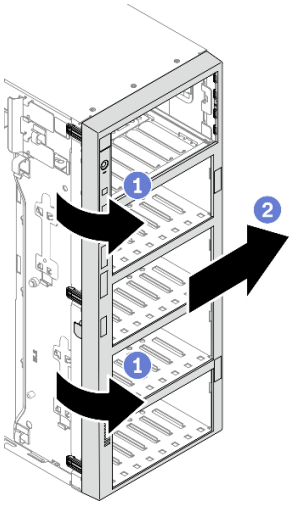

Figure 41. Front bezel removal

a. ❶ Lift the three plastic tabs to release the left side of the bezel from the chassis.
b. ❷ Pivot the bezel as shown to remove it from the chassis.

Demo video

Watch the procedure on YouTube

Remove a flash power module

Follow this procedure to remove a flash power module.

About this task

S002

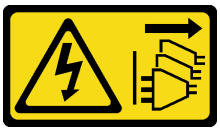

CAUTION:
The power-control button on the device and the power switch on the power supply do not turn off the electrical current supplied to the device. The device also might have more than one power cord. To remove all electrical current from the device, ensure that all power cords are disconnected from the power source.

Attention:

- Read "Installation guidelines" on page 60 to ensure that you work safely.
- Power off the server and disconnect all power cords for this task.
- Prevent exposure to static electricity, which might lead to system halt and loss of data, by keeping static-sensitive components in their static-protective packages until installation, and handling these devices with an electrostatic-discharge wrist strap or other grounding system.
- If the server is in a rack, remove it from the rack.
- If foot stands are installed on the server, rotate them inwards and lay the server on its side for easier operation.

Locate the flash power module slot on the air baffle.

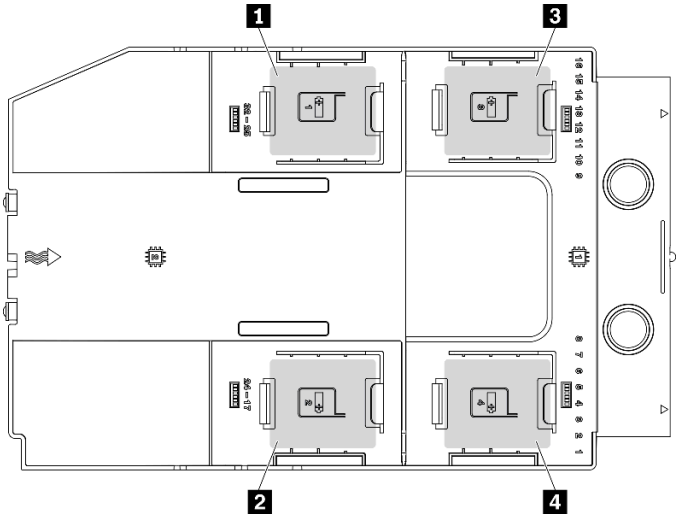

Figure 42. Flash power module slot location

Table 38. Flash power module slot location on air baffle

1 Flash power module slot 1	3 Flash power module slot 3
2 Flash power module slot 2	4 Flash power module slot 4

Procedure

Step 1. Disconnect the cable of the flash power module from the RAID adapter.

Step 2. Remove the flash power module.

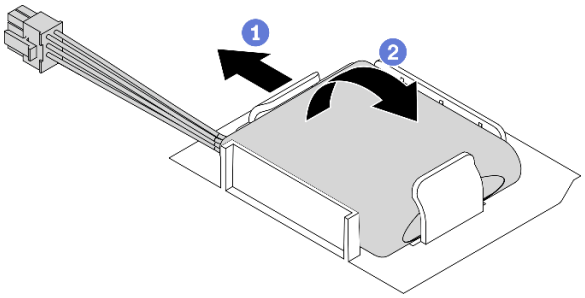

Figure 43. Flash power module removal

a. 1 Gently pivot the retaining clip as shown.

b. 2 Lift the flash power module up and remove it from the holder.

Demo video

Watch the procedure on YouTube

Remove the air baffle

Follow this procedure to remove the air baffle.

About this task

S033

CAUTION:
Hazardous energy present. Voltages with hazardous energy might cause heating when shorted with metal, which might result in spattered metal, burns, or both.

S017

CAUTION:
Hazardous moving fan blades nearby. Keep fingers and other body parts away.

Attention:

- Read "Installation guidelines" on page 60 to ensure that you work safely.
- Power off the server and disconnect all power cords for this task.
- Prevent exposure to static electricity, which might lead to system halt and loss of data, by keeping static-sensitive components in their static-protective packages until installation, and handling these devices with an electrostatic-discharge wrist strap or other grounding system.
- If the server is in a rack, remove it from the rack.
- If foot stands are installed on the server, rotate them inwards and lay the server on its side for easier operation.

Procedure

Step 1. Lift the air baffle from the server, and set it aside.

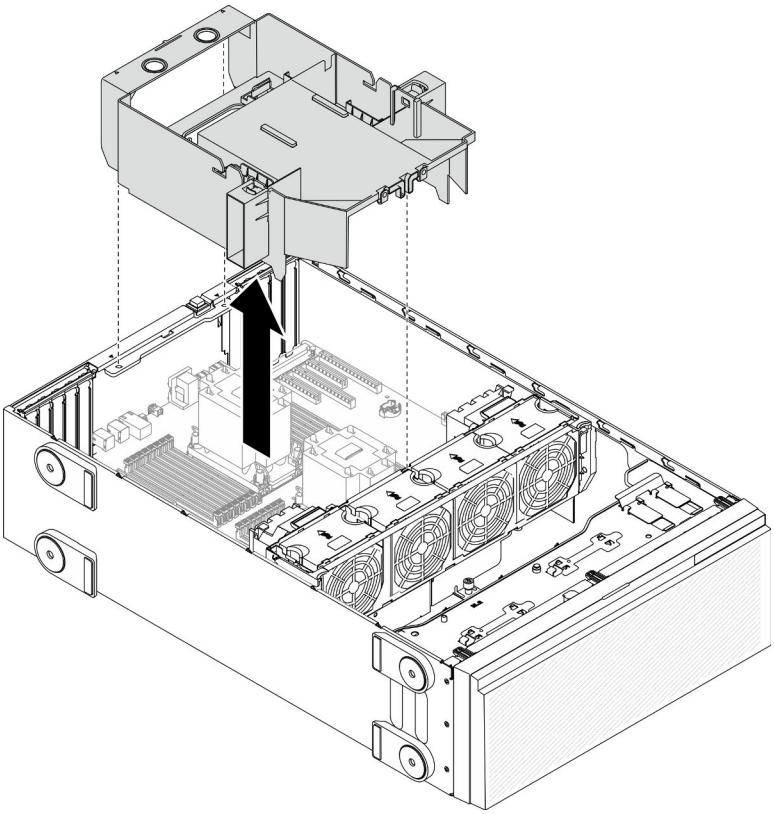

Figure 44. Air baffle removal

Attention: For proper cooling and airflow, install the air baffle before you turn on the server. Operating the server with the air baffle removed might damage server components.

Demo video

Watch the procedure on YouTube

Remove an NVLink bridge

Use this information to remove an NVLink bridge.

About this task

Important: Make sure you have a suction cup available for properly removing the NVLink bridge.

S002

CAUTION:
The power-control button on the device and the power switch on the power supply do not turn off the electrical current supplied to the device. The device also might have more than one power cord. To remove all electrical current from the device, ensure that all power cords are disconnected from the power source.

Attention:

- Read "Installation guidelines" on page 60 to ensure that you work safely.
- Power off the server and disconnect all power cords for this task.
- Prevent exposure to static electricity, which might lead to system halt and loss of data, by keeping static-sensitive components in their static-protective packages until installation, and handling these devices with an electrostatic-discharge wrist strap or other grounding system.
- If the server is in a rack, remove it from the rack.
- If foot stands are installed on the server, rotate them inwards and lay the server on its side for easier operation.

Procedure

Step 1. Remove the NVLink bridge.

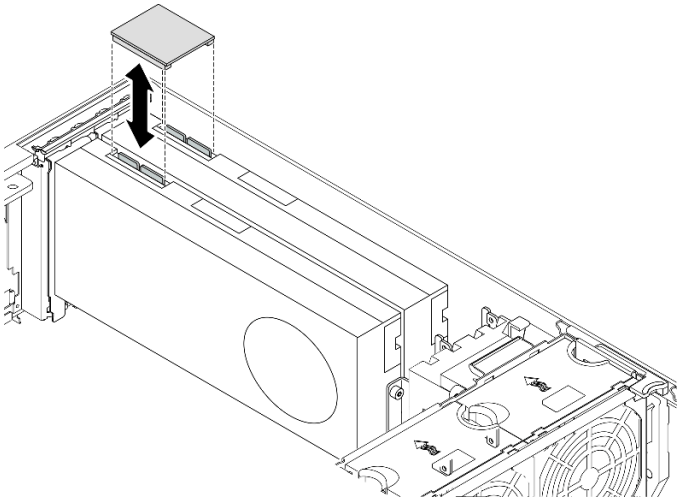

Figure 45. NVLink bridge removal

Step 2. Install the NVLink covers.

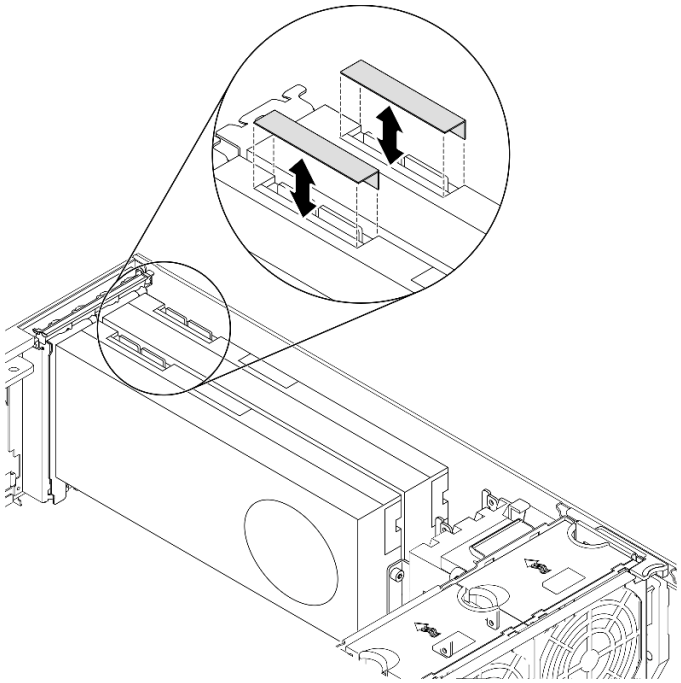

Figure 46. NVLink covers installation

Demo video

Watch the procedure on YouTube

Remove a full-length GPU adapter

Use this information to remove a full-length GPU adapter.

About this task

S002

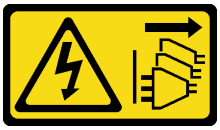

CAUTION:
The power-control button on the device and the power switch on the power supply do not turn off the electrical current supplied to the device. The device also might have more than one power cord. To remove all electrical current from the device, ensure that all power cords are disconnected from the power source.

Attention:

- Read "Installation guidelines" on page 60 to ensure that you work safely.
- Power off the server and disconnect all power cords for this task.
- Prevent exposure to static electricity, which might lead to system halt and loss of data, by keeping static-sensitive components in their static-protective packages until installation, and handling these devices with an electrostatic-discharge wrist strap or other grounding system.
- If the server is in a rack, remove it from the rack.

- If foot stands are installed on the server, rotate them inwards and lay the server on its side for easier operation.

Notes:

- Depending on the specific type, your full-length GPU adapter might look different from the illustration in this topic.
- Use any documentation that comes with the full-length GPU adapter and follow those instructions in addition to the instructions in this topic.

Procedure

Step 1. Locate the full-length GPU adapter you want to remove.

Step 2. Remove the full-length GPU adapter.

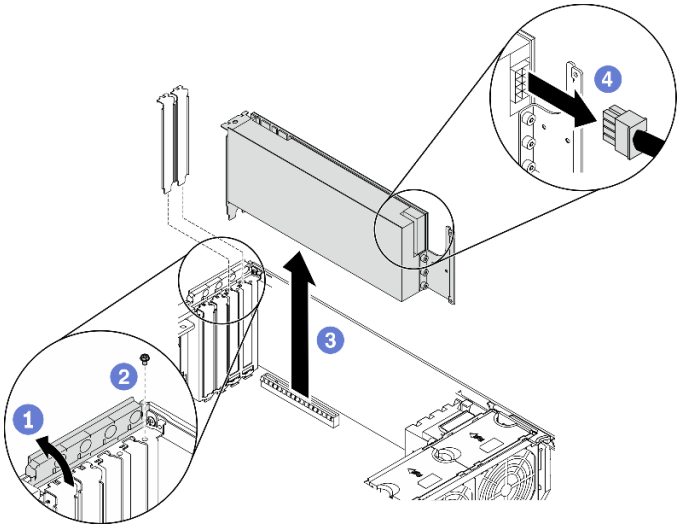

Figure 47. Full-length GPU adapter removal

a. ❶ Open the PCIe adapter retainer.

b. ❷ Remove the screw that secures the full-length GPU adapter.

c. ❸ Grasp the full-length GPU adapter by its edges and carefully pull it out of the PCIe slot.

d. ❹ Disconnect the power cable from the full-length GPU adapter.

Demo video

Watch the procedure on YouTube

Remove a hot-swap fan

Use this procedure to remove a hot-swap fan.

About this task

S017

CAUTION:
Hazardous moving fan blades nearby. Keep fingers and other body parts away.

S033

CAUTION:
Hazardous energy present. Voltages with hazardous energy might cause heating when shorted with metal, which might result in spattered metal, burns, or both.

Attention:

- Read "Installation guidelines" on page 60 to ensure that you work safely.
- Prevent exposure to static electricity, which might lead to system halt and loss of data, by keeping static-sensitive components in their static-protective packages until installation, and handling these devices with an electrostatic-discharge wrist strap or other grounding system.
- If the server is in a rack, remove it from the rack.
- If foot stands are installed on the server, rotate them inwards and lay the server on its side for easier operation.

Procedure

Step 1. Remove the hot-swap fan.

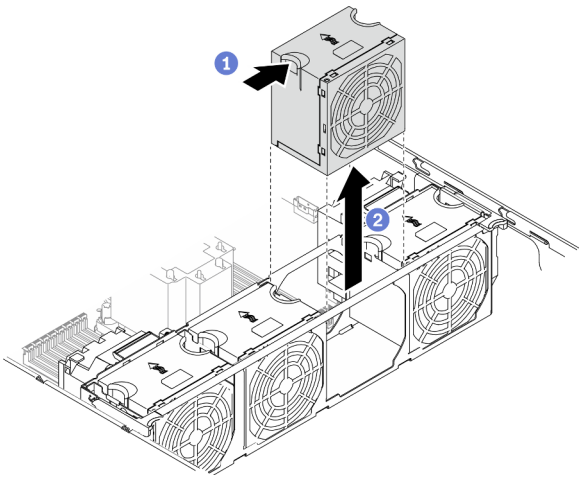

Figure 48. Hot-swap fan removal

a. ❶ Pinch on the top of the fan, and press on the latch to release the fan from the connector.
b. ❷ Lift the fan out from the fan cage.

Demo video

Watch the procedure on YouTube

Remove the fan cage assembly

Use this procedure to remove the fan cage assembly.

About this task

S002

CAUTION:
The power-control button on the device and the power switch on the power supply do not turn off the electrical current supplied to the device. The device also might have more than one power cord. To remove all electrical current from the device, ensure that all power cords are disconnected from the power source.

Attention:

- Read "Installation guidelines" on page 60 to ensure that you work safely.
- Power off the server and disconnect all power cords for this task.
- Prevent exposure to static electricity, which might lead to system halt and loss of data, by keeping static-sensitive components in their static-protective packages until installation, and handling these devices with an electrostatic-discharge wrist strap or other grounding system.
- If the server is in a rack, remove it from the rack.
- If foot stands are installed on the server, rotate them inwards and lay the server on its side for easier operation.

Procedure

Step 1. Remove the fan cage assembly.

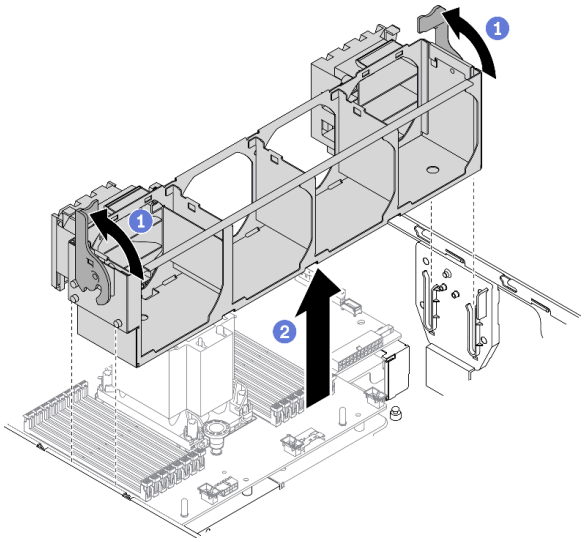

Figure 49. Fan cage assembly removal

a. ❶ Lift and rotate the fan cage release latches to disengage the fan cage assembly from the server.

b. ❷ Lift the fan cage assembly from the server.

Demo video

Watch the procedure on YouTube

Remove an optical drive or a tape drive

Use this information to remove an optical drive or a tape drive.

About this task

S002

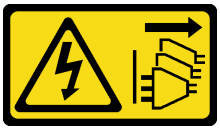

CAUTION:
The power-control button on the device and the power switch on the power supply do not turn off the electrical current supplied to the device. The device also might have more than one power cord. To remove all electrical current from the device, ensure that all power cords are disconnected from the power source.

S006

CAUTION:
When laser products (such as CD-ROMs, DVD drives, fiber optic devices, or transmitters) are installed, note the following:

- **Do not remove the covers. Removing the covers of the laser product could result in exposure to hazardous laser radiation. There are no serviceable parts inside the device.**
- **Use of controls or adjustments or performance of procedures other than those specified herein might result in hazardous radiation exposure.**

S007

CAUTION:
This product contains a Class 1M laser. Do not view directly with optical instruments.

Note: This section only applies to server models that come with a optical or tape drive. For those that come with a 5.25-inch drive bay adapter, see "Remove the 5.25-inch drive bay adapter assembly" on page 99.

Attention:

- Read "Installation guidelines" on page 60 to ensure that you work safely.
- Power off the server and disconnect all power cords for this task.
- Prevent exposure to static electricity, which might lead to system halt and loss of data, by keeping static-sensitive components in their static-protective packages until installation, and handling these devices with an electrostatic-discharge wrist strap or other grounding system.
- If the server is in a rack, remove it from the rack.

Note: The following illustrations are based on the scenario that you remove an optical drive. The procedure is similar for removing a tape drive.

Procedure

Step 1. Disconnect the cables from the rear of the optical drive or tape drive.

Step 2. Remove the optical drive or tape drive.

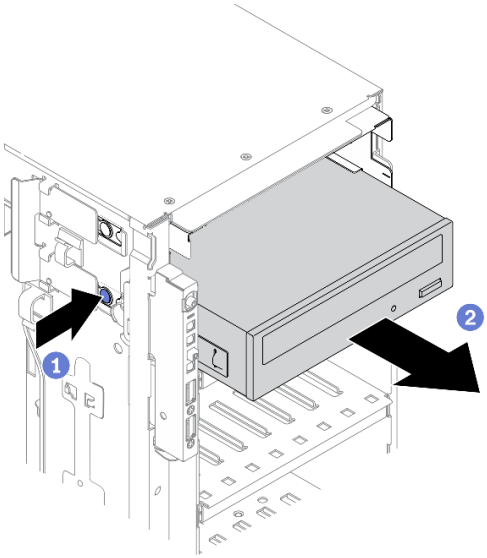

Figure 50. Optical drive removal

a. 1 Press and hold the release tab.

b. 2 Carefully pull the optical drive or tape drive at the same time to remove it from the chassis.

Demo video

Watch the procedure on YouTube

Remove the 5.25-inch drive bay adapter assembly

Use this information to remove the 5.25-inch drive bay adapter assembly.

About this task

S002

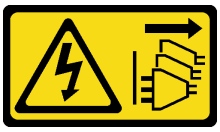

CAUTION:
The power-control button on the device and the power switch on the power supply do not turn off the electrical current supplied to the device. The device also might have more than one power cord. To remove all electrical current from the device, ensure that all power cords are disconnected from the power source.

S006

CAUTION:
When laser products (such as CD-ROMs, DVD drives, fiber optic devices, or transmitters) are installed, note the following:

- **Do not remove the covers. Removing the covers of the laser product could result in exposure to hazardous laser radiation. There are no serviceable parts inside the device.**
- **Use of controls or adjustments or performance of procedures other than those specified herein might result in hazardous radiation exposure.**

S007

CAUTION:
This product contains a Class 1M laser. Do not view directly with optical instruments.

Note: This section only applies to server models that come with a 5.25-inch drive bay adapter. For those that come with an optical or tape drive, see "Remove an optical drive or a tape drive" on page 98.

Attention:

- Read "Installation guidelines" on page 60 to ensure that you work safely.
- Power off the server and disconnect all power cords for this task.
- Prevent exposure to static electricity, which might lead to system halt and loss of data, by keeping static-sensitive components in their static-protective packages until installation, and handling these devices with an electrostatic-discharge wrist strap or other grounding system.
- If the server is in a rack, remove it from the rack.

Procedure

Step 1. Disconnect every cable from the 5.25-inch drive bay adapter assembly.

Step 2. Remove the 5.25-inch drive bay adapter assembly.

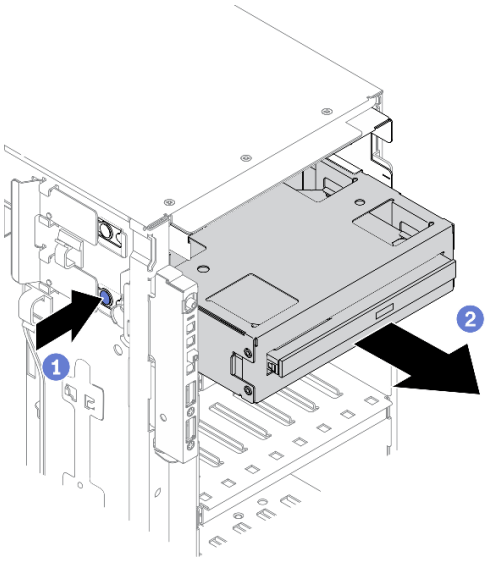

Figure 51. 5.25-inch drive bay adapter assembly removal

a. ❶ Press and hold the release tab.

b. ❷ Carefully pull the 5.25-inch drive bay adapter assembly at the same time to remove it from the chassis.

Step 3. Remove the slim optical drive out from the adapter.

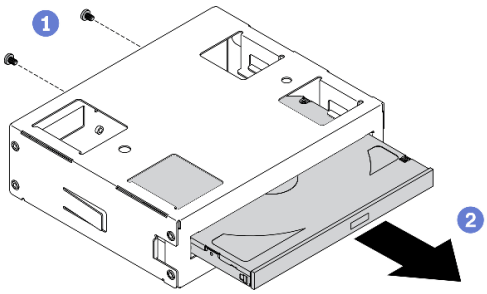

Figure 52. Removing slim optical drive from the drive bay adapter

a. ❶ Remove the two screws that secure the slim optical drive.

b. ❷ Slide the slim optical drive out from the adapter.

Demo video

Watch the procedure on YouTube

Remove the optical drive cage

Use this information to remove the optical drive cage.

About this task

S002

CAUTION:
The power-control button on the device and the power switch on the power supply do not turn off the electrical current supplied to the device. The device also might have more than one power cord. To remove all electrical current from the device, ensure that all power cords are disconnected from the power source.

Attention:

- Read "Installation guidelines" on page 60 to ensure that you work safely.
- Power off the server and disconnect all power cords for this task.
- Prevent exposure to static electricity, which might lead to system halt and loss of data, by keeping static-sensitive components in their static-protective packages until installation, and handling these devices with an electrostatic-discharge wrist strap or other grounding system.
- If the server is in a rack, remove it from the rack.

Procedure

Step 1. Remove the optical drive cage.

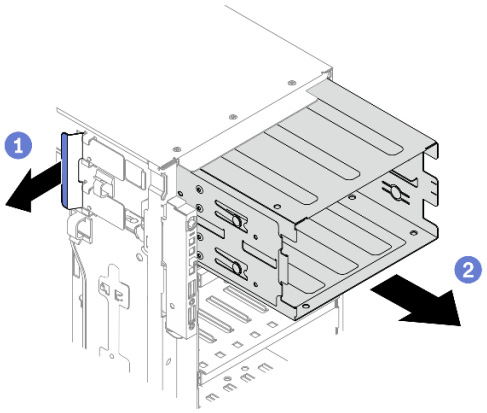

Figure 53. Optical drive cage removal

a. 1 Lift and hold the blue retention tab.

b. 2 Carefully pull the optical drive cage at the same time to slide it out of the opening in the chassis.

Demo video

Watch the procedure on YouTube

Remove the expansion drive cage

Use this information to remove the expansion drive cage.

About this task

S002

CAUTION:
The power-control button on the device and the power switch on the power supply do not turn off the electrical current supplied to the device. The device also might have more than one power cord. To remove all electrical current from the device, ensure that all power cords are disconnected from the power source.

Attention:

- Read "Installation guidelines" on page 60 to ensure that you work safely.
- Power off the server and disconnect all power cords for this task.
- Prevent exposure to static electricity, which might lead to system halt and loss of data, by keeping static-sensitive components in their static-protective packages until installation, and handling these devices with an electrostatic-discharge wrist strap or other grounding system.
- If the server is in a rack, remove it from the rack.

Procedure

Step 1. Disconnect all the cables from the backplane.

Step 2. Remove the expansion drive cage.

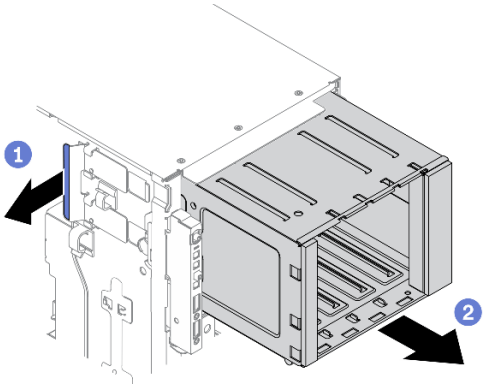

Figure 54. Expansion drive cage removal

a. 1 Lift and hold the blue retention tab.

b. 2 Carefully pull the expansion drive cage at the same time to slide it out of the opening in the chassis.

Demo video

Watch the procedure on YouTube

Install the expansion drive cage

Use this information to install the expansion drive cage.

About this task

S002

CAUTION:
The power-control button on the device and the power switch on the power supply do not turn off the electrical current supplied to the device. The device also might have more than one power cord. To remove all electrical current from the device, ensure that all power cords are disconnected from the power source.

Attention:

- Read "Installation guidelines" on page 60 to ensure that you work safely.
- Power off the server and disconnect all power cords for this task.
- Prevent exposure to static electricity, which might lead to system halt and loss of data, by keeping static-sensitive components in their static-protective packages until installation, and handling these devices with an electrostatic-discharge wrist strap or other grounding system.

Procedure

Step 1. Install the expansion drive cage.

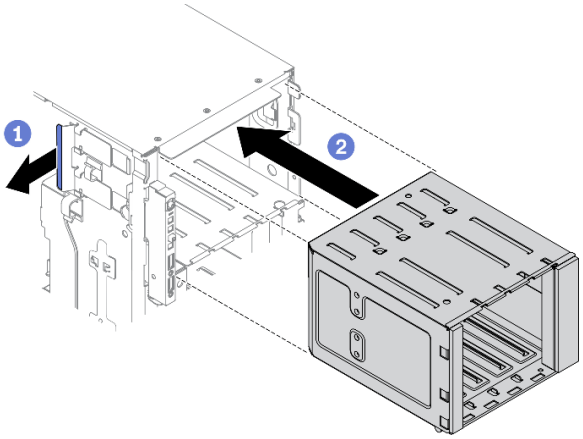

Figure 55. Expansion drive cage installation

a. 1 Lift and hold the blue retention tab.

b. 2 Carefully push the expansion drive cage at the same time to slide it into the bay until it snaps into position.

Demo video

Watch the procedure on YouTube

Install the optical drive cage

Use this information to install the optical drive cage.

About this task

S002

CAUTION:
The power-control button on the device and the power switch on the power supply do not turn off the electrical current supplied to the device. The device also might have more than one power cord. To remove all electrical current from the device, ensure that all power cords are disconnected from the power source.

Attention:

- Read "Installation guidelines" on page 60 to ensure that you work safely.
- Power off the server and disconnect all power cords for this task.
- Prevent exposure to static electricity, which might lead to system halt and loss of data, by keeping static-sensitive components in their static-protective packages until installation, and handling these devices with an electrostatic-discharge wrist strap or other grounding system.

Procedure

Step 1. If there is a filler installed in the bay, remove it. Keep the filler in a safe place for future use.

Step 2. Install the optical drive cage.

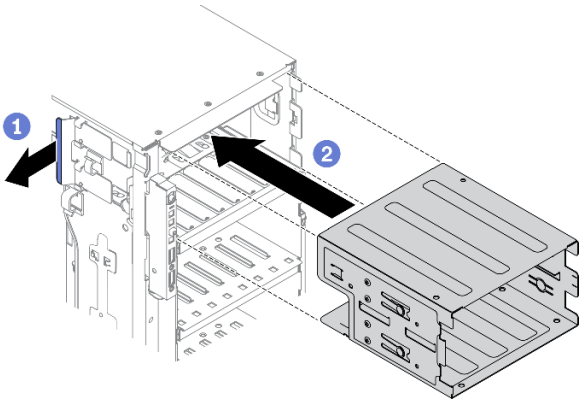

Figure 56. Optical drive cage installation

a. 1 Lift and hold the blue retention tab.

b. 2 Carefully push the optical drive cage at the same time to slide it into the bay until it snaps into position.

Demo video

Watch the procedure on YouTube

Install an optical drive or a tape drive

Use this information to install an optical drive or a tape drive.

About this task

S002

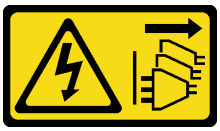

CAUTION:
The power-control button on the device and the power switch on the power supply do not turn off the electrical current supplied to the device. The device also might have more than one power cord. To remove all electrical current from the device, ensure that all power cords are disconnected from the power source.

S006

CAUTION:
When laser products (such as CD-ROMs, DVD drives, fiber optic devices, or transmitters) are installed, note the following:

- **Do not remove the covers. Removing the covers of the laser product could result in exposure to hazardous laser radiation. There are no serviceable parts inside the device.**
- **Use of controls or adjustments or performance of procedures other than those specified herein might result in hazardous radiation exposure.**

S007

CAUTION:
This product contains a Class 1M laser. Do not view directly with optical instruments.

Attention:

- Read "Installation guidelines" on page 60 to ensure that you work safely.
- Power off the server and disconnect all power cords for this task.
- Prevent exposure to static electricity, which might lead to system halt and loss of data, by keeping static-sensitive components in their static-protective packages until installation, and handling these devices with an electrostatic-discharge wrist strap or other grounding system.

Note: The following illustrations are based on the scenario that you install an optical drive. The procedure is similar for installing a tape drive.

Procedure

Step 1. If necessary, remove the cover of the drive bay filler from the front bezel.

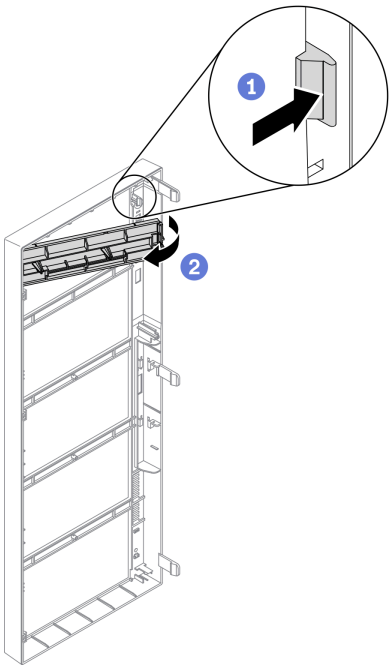

Figure 57. Drive bay filler cover installation

a. ❶ Push the tab on the front bezel to release the cover of the drive bay filler.

b. ❷ Remove the cover of the drive bay filler as shown.

Step 2. If necessary, remove the drive bay filler out of the chassis.

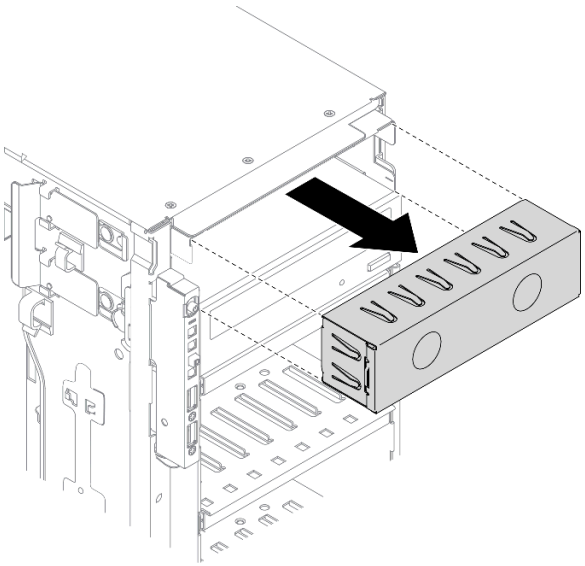

Figure 58. Drive bay filler installation

Step 3. Remove the retainer from the chassis.

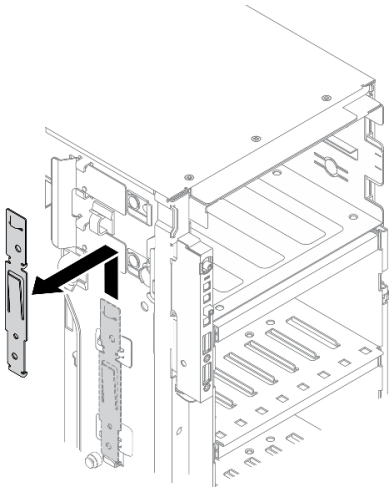

Figure 59. Drive retainer removal

Step 4. Install the retainer to only the left side of the optical drive or tape drive.

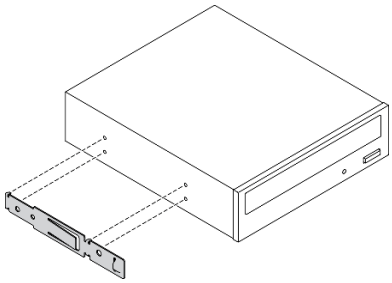

Figure 60. Optical drive retainer installation

Step 5. Hold the optical drive or tape drive in the correct orientation; then, slide it into the drive bay until it snaps into position.

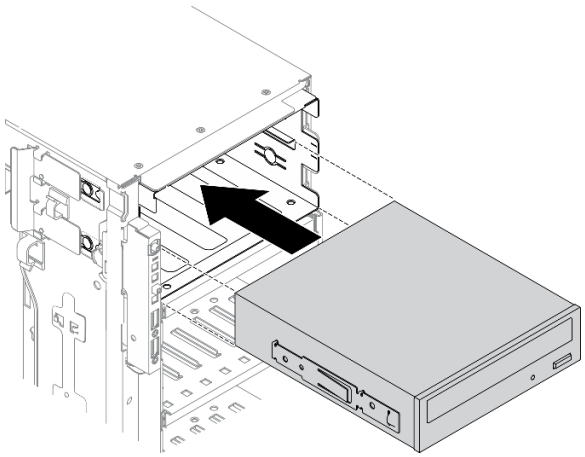

Figure 61. Optical drive installation

Step 6. Connect the power cable and the signal cable to the rear of the optical drive or tape drive. See "Optical drive cable routing" on page 55 or "Tape drive cable routing" on page 57.

Demo video

Watch the procedure on YouTube

Install the 5.25-inch drive bay adapter assembly

Use this information to install the 5.25-inch drive bay adapter assembly.

About this task

S002

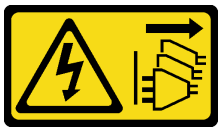

CAUTION:
The power-control button on the device and the power switch on the power supply do not turn off the electrical current supplied to the device. The device also might have more than one power cord. To remove all electrical current from the device, ensure that all power cords are disconnected from the power source.

S006

CAUTION:
When laser products (such as CD-ROMs, DVD drives, fiber optic devices, or transmitters) are installed, note the following:

- **Do not remove the covers. Removing the covers of the laser product could result in exposure to hazardous laser radiation. There are no serviceable parts inside the device.**
- **Use of controls or adjustments or performance of procedures other than those specified herein might result in hazardous radiation exposure.**

S007

CAUTION:
This product contains a Class 1M laser. Do not view directly with optical instruments.

Attention:

- Read "Installation guidelines" on page 60 to ensure that you work safely.
- Power off the server and disconnect all power cords for this task.
- Prevent exposure to static electricity, which might lead to system halt and loss of data, by keeping static-sensitive components in their static-protective packages until installation, and handling these devices with an electrostatic-discharge wrist strap or other grounding system.

Procedure

Step 1. If necessary, remove the cover of the drive bay filler from the front bezel.

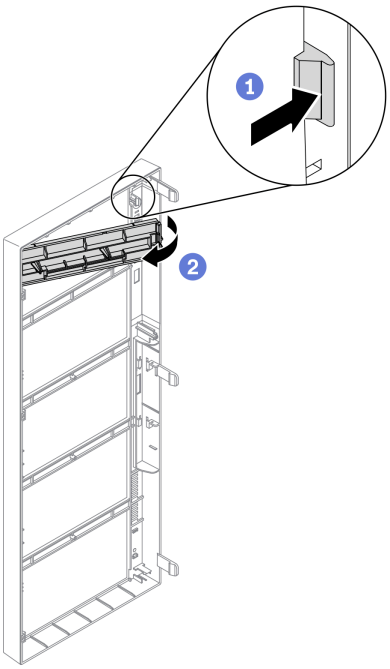

Figure 62. Drive bay filler cover installation

a. ❶ Push the tab on the front bezel to release the cover of the drive bay filler.

b. ❷ Remove the cover of the drive bay filler as shown.

Step 2. If necessary, remove the drive bay filler out of the chassis.

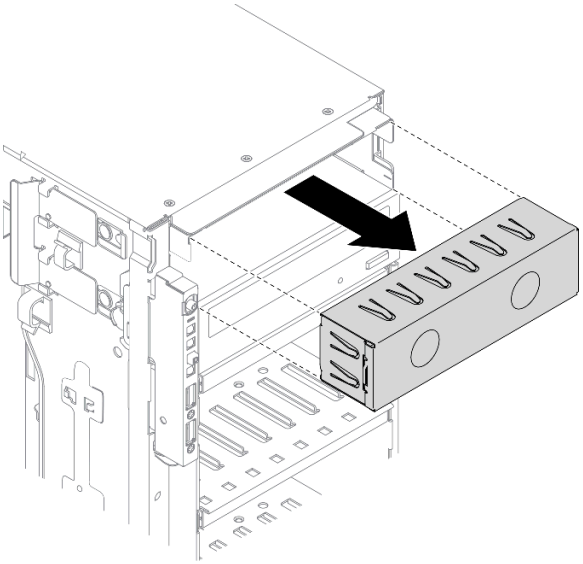

Figure 63. Drive bay filler installation

Step 3. Install the slim optical drive into the adapter.

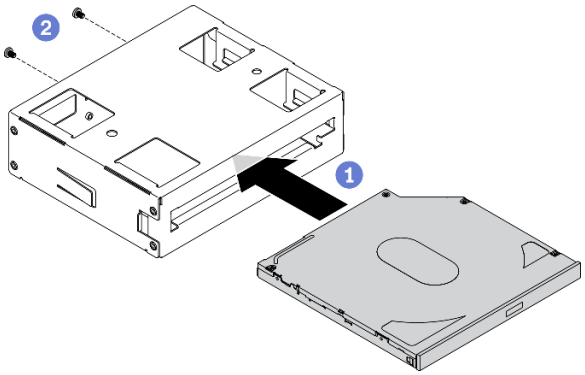

Figure 64. Installing slim optical drive into the drive bay adapter

a. ❶ Slide the slim optical drive into the adapter.

b. ❷ Secure the slim optical drive with two screws.

Step 4. Hold the 5.25-inch drive bay adapter assembly in the correct orientation; then, slide it into the drive bay until it snaps into position.

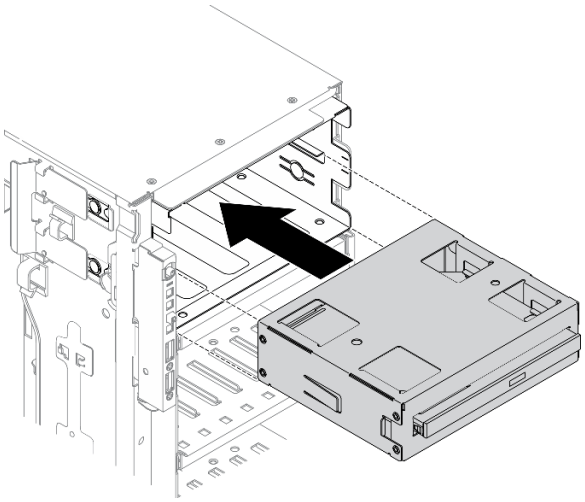

Figure 65. Optical drive installation

Step 5. Connect the power cable and the signal cable to the rear of the 5.25-inch drive bay adapter assembly. For more information about the cable routing. See "Optical drive cable routing" on page 55.

Demo video

Watch the procedure on YouTube

Install a 2.5-inch hot-swap drive backplane

Use this information to install a 2.5-inch hot-swap drive backplane.

About this task

S002

CAUTION:
The power-control button on the device and the power switch on the power supply do not turn off the electrical current supplied to the device. The device also might have more than one power cord. To remove all electrical current from the device, ensure that all power cords are disconnected from the power source.

Attention:

- Read "Installation guidelines" on page 60 to ensure that you work safely.
- Power off the server and disconnect all power cords for this task.
- Prevent exposure to static electricity, which might lead to system halt and loss of data, by keeping static-sensitive components in their static-protective packages until installation, and handling these devices with an electrostatic-discharge wrist strap or other grounding system.

Procedure

Step 1. Install the backplane.

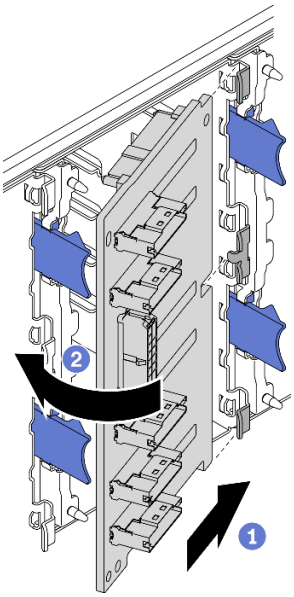

Figure 66. Installation of the 2.5-inch hot-swap drive backplane

a. ❶ Insert the backplane into the backplane slot as shown.

b. ❷ Carefully rotate the edge of the new backplane toward the drive cage until it is secured by the release tabs.

Demo video

Watch the procedure on YouTube

Install a 3.5-inch hot-swap drive backplane

Use this information to install a 3.5-inch hot-swap drive backplane.

About this task

S002

CAUTION:
The power-control button on the device and the power switch on the power supply do not turn off the electrical current supplied to the device. The device also might have more than one power cord. To remove all electrical current from the device, ensure that all power cords are disconnected from the power source.

Attention:

- Read "Installation guidelines" on page 60 to ensure that you work safely.
- Power off the server and disconnect all power cords for this task.
- Prevent exposure to static electricity, which might lead to system halt and loss of data, by keeping static-sensitive components in their static-protective packages until installation, and handling these devices with an electrostatic-discharge wrist strap or other grounding system.

Procedure

Step 1. Position the backplane on the drive cage so that the tabs on the drive cage are inserted into the corresponding holes in the backplane.

Step 2. Slide the backplane as shown until it is seated into position in the drive cage.

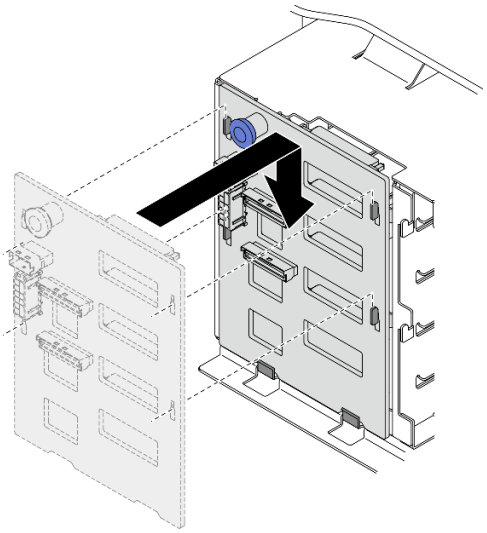

Figure 67. Installation of the 3.5-inch hot-swap drive backplane

Demo video

Watch the procedure on YouTube

Install a 3.5-inch simple-swap drive backplate

Use this information to install a 3.5-inch simple-swap drive backplate.

About this task

S002

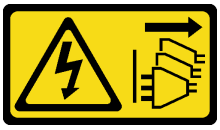

CAUTION:
The power-control button on the device and the power switch on the power supply do not turn off the electrical current supplied to the device. The device also might have more than one power cord. To remove all electrical current from the device, ensure that all power cords are disconnected from the power source.

Attention:

- Read "Installation guidelines" on page 60 to ensure that you work safely.
- Power off the server and disconnect all power cords for this task.
- Prevent exposure to static electricity, which might lead to system halt and loss of data, by keeping static-sensitive components in their static-protective packages until installation, and handling these devices with an electrostatic-discharge wrist strap or other grounding system.

Procedure

Step 1. Position the backplate on the drive cage so that the tabs on the drive cage are inserted into the corresponding holes in the backplate.

Step 2. Slide the backplate as shown until it is seated into position in the drive cage.

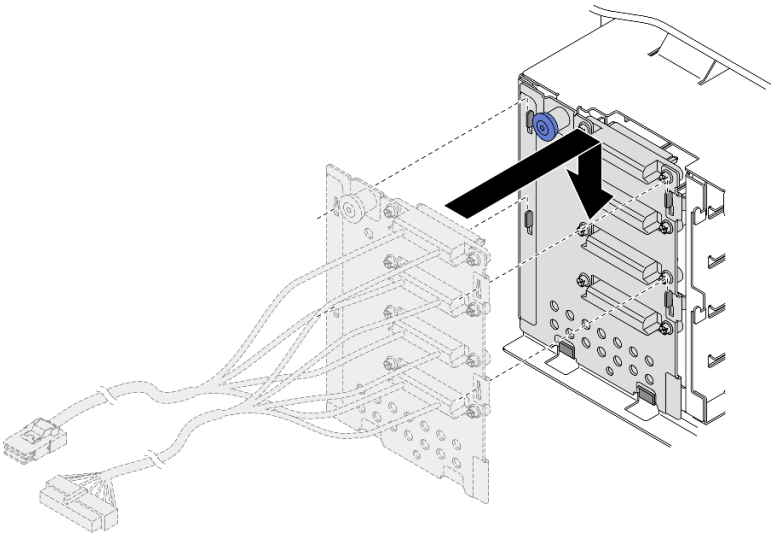

Figure 68. Installation of the 3.5-inch hot-swap drive backplate

Step 3. Connect the power cable and the signal cable to the system board. See "3.5-inch simple-swap drive backplate cable routing" in the *ThinkSystem ST650 V2 Backplane/Backplate Cable Routing Guide*.

Demo video

Watch the procedure on YouTube

Install a 2.5-inch drive into a 3.5-inch drive bay

Use this information to install a 2.5-inch drive into a 3.5-inch drive bay.

About this task

S002

CAUTION:
The power-control button on the device and the power switch on the power supply do not turn off the electrical current supplied to the device. The device also might have more than one power cord. To remove all electrical current from the device, ensure that all power cords are disconnected from the power source.

Attention:

- Read "Installation guidelines" on page 60 to ensure that you work safely.
- Power off the server and disconnect all power cords for this task.
- Prevent exposure to static electricity, which might lead to system halt and loss of data, by keeping static-sensitive components in their static-protective packages until installation, and handling these devices with an electrostatic-discharge wrist strap or other grounding system.

Procedure

Step 1. Position the 2.5-inch drive into the 2.5-inch to 3.5-inch drive adapter.

Step 2. Align the two screw holes in the drive with the corresponding holes in the drive adapter; then, install the two screws to secure the drive to the drive adapter.

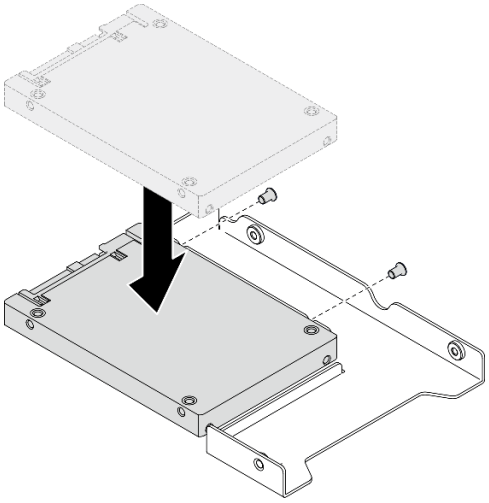

Figure 69. 2.5-inch drive installation to drive adapter

Step 3. Position the drive adapter with the drive into the 3.5-inch drive tray. Align the screw holes in the drive adapter and the drive with the corresponding holes in the tray; then, install the five screws to secure the drive adapter and the drive into the tray.

Figure 70. Installing the screws that secure the 2.5-inch drive and the drive adapter

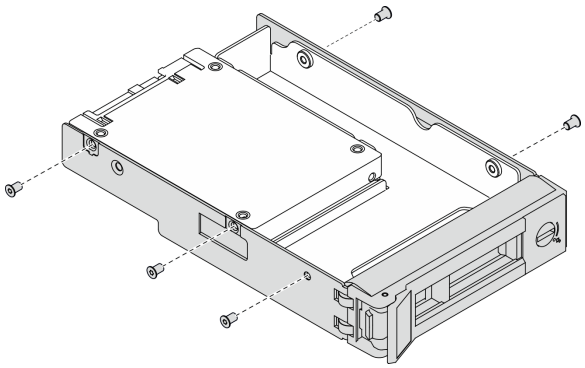

Step 4. Slide the tray with the drive into the drive bay from the front until it snaps into position and then completely close the handle. See "Install a simple-swap drive" on page 116 or "Install a hot-swap drive" on page 118.

Demo video

Watch the procedure on YouTube

Install a simple-swap drive

Use this information to install a simple-swap drive.

About this task

S002

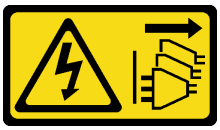

CAUTION:
The power-control button on the device and the power switch on the power supply do not turn off the electrical current supplied to the device. The device also might have more than one power cord. To remove all electrical current from the device, ensure that all power cords are disconnected from the power source.

Attention:

- Read "Installation guidelines" on page 60 to ensure that you work safely.
- Power off the server and disconnect all power cords for this task.
- Prevent exposure to static electricity, which might lead to system halt and loss of data, by keeping static-sensitive components in their static-protective packages until installation, and handling these devices with an electrostatic-discharge wrist strap or other grounding system.

The following notes describe the type of drives that your server supports and other information that you must consider when you install a drive.

- For a complete list of supported optional devices for the server, see: https://serverproven.lenovo.com/
- The drive bays are numbered to indicate the installation order (starting from number "0"). Follow the installation order when you install a drive. See "Front view" on page 16.

- The drives in a single RAID array must be the same type, same size, and same capacity.

Procedure

Step 1. If the drive bay has a drive filler installed, remove it. Keep the drive filler in a safe place for future use.

Step 2. Install the simple-swap drive.

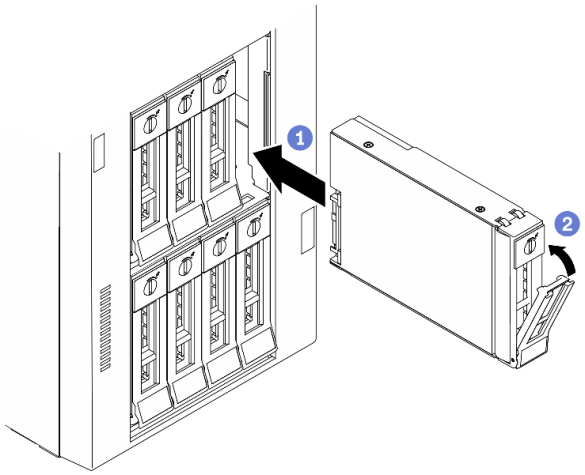

Figure 71. 3.5-inch simple-swap drive installation

a. 1 Ensure that the tray handle is in the open position. Align the drive with the guide rails in the bay; then, gently push the drive into the bay until the drive stops.

b. 2 Close the tray handle to lock the drive in place.

After you finish

1. Install other drives or drive fillers if necessary.

   Note: All the drive bays must be occupied. This means that each bay must have a drive or drive filler installed.

2. Close the security door; then, use the key to lock the server cover.
3. Check the drive activity LED on the front panel to verify that the drive is operating correctly.

Simple-swap drive activity LED	Color	Description
Solid on	Green	The simple-swap drive is active.
Off	None	The simple-swap drive is not active.

4. Use the Lenovo XClarity Provisioning Manager to configure the RAID if necessary. For more information, see:

   http://sysmgt.lenovofiles.com/help/index.jsp?topic=%2FLXPM%2FRAID_setup.html

Demo video

Watch the procedure on YouTube

Install a hot-swap drive

Use this information to install a hot-swap drive.

About this task

S033

CAUTION:
Hazardous energy present. Voltages with hazardous energy might cause heating when shorted with metal, which might result in spattered metal, burns, or both.

Attention:

- Read "Installation guidelines" on page 60 to ensure that you work safely.
- Prevent exposure to static electricity, which might lead to system halt and loss of data, by keeping static-sensitive components in their static-protective packages until installation, and handling these devices with an electrostatic-discharge wrist strap or other grounding system.

The following notes describe the type of drives that your server supports and other information that you must consider when you install a drive.

- For a complete list of supported optional devices for the server, see: https://serverproven.lenovo.com/
- The drive bays are numbered to indicate the installation order (starting from number "0"). Follow the installation order when you install a drive. See "Front view" on page 16.
- The drives in a single RAID array must be the same type, same size, and same capacity.

Procedure

Step 1. If the drive bay has a drive filler installed, remove it. Keep the drive filler in a safe place for future use.

Step 2. Install the hot-swap drive.

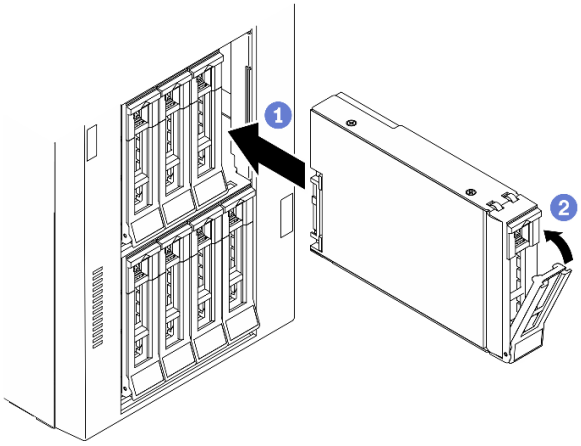

Figure 72. Hot-swap drive installation

a. ❶ Ensure that the tray handle is in the open position. Slide the drive into the drive bay until it snaps into position.

b. ❷ Close the tray handle to lock the drive in place.

After you finish

1. Install other drives or drive fillers if necessary.

   Note: All the drive bays must be occupied. This means that each bay must have a drive or drive filler installed.

2. Close the security door; then, use the key to lock the server cover.
3. Check the drive LEDs to verify that the drive is operating correctly.

Drive LED	Status	Description
Drive activity LED (top)	Solid green	The drive is powered but not active.
	Blinking green	The drive is active.
Drive status LED (bottom)	Solid yellow	The drive has an error.
	Blinking yellow (blinking slowly, about one flash per second)	The drive is being rebuilt.
	Blinking yellow (blinking rapidly, about four flashes per second)	The RAID adapter is locating the drive.

4. Use the Lenovo XClarity Provisioning Manager to configure the RAID if necessary. For more information, see:

   http://sysmgt.lenovofiles.com/help/index.jsp?topic=%2FLXPM%2FRAID_setup.html

Demo video

Watch the procedure on YouTube

Install the internal CFF adapter

Use this information to install the internal CFF RAID adapter, internal CFF HBA adapter, or internal CFF RAID expander adapter.

About this task

S002

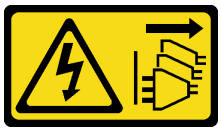

CAUTION:
The power-control button on the device and the power switch on the power supply do not turn off the electrical current supplied to the device. The device also might have more than one power cord. To remove all electrical current from the device, ensure that all power cords are disconnected from the power source.

Attention:

- Read "Installation guidelines" on page 60 to ensure that you work safely.

- Power off the server and disconnect all power cords for this task.
- Prevent exposure to static electricity, which might lead to system halt and loss of data, by keeping static-sensitive components in their static-protective packages until installation, and handling these devices with an electrostatic-discharge wrist strap or other grounding system.

Location of the internal CFF adapter.

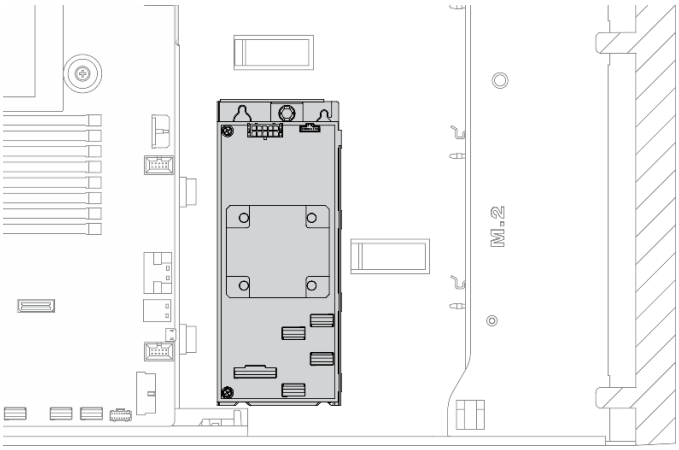

Figure 73. Internal CFF adapter location

Procedure

Step 1. Align the holes on the CFF adapter with those on its tray, put down the CFF adapter on its tray, and tighten the screws to secure them.

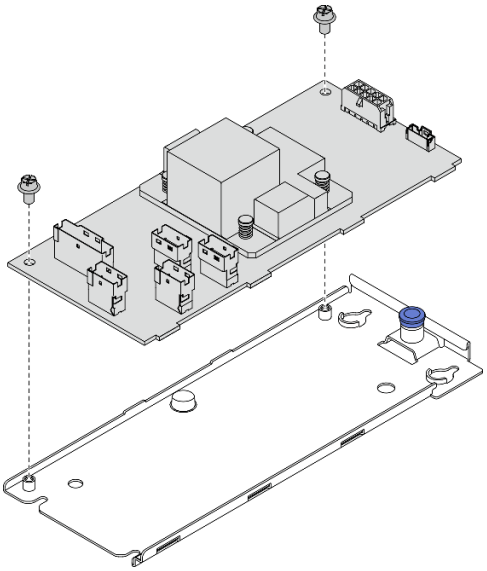

Figure 74. Internal CFF adapter tray installation

Step 2. Align the notches on the tray with the pins on the chassis, place down the CFF adapter, and slightly slide it as shown to secure it on the chassis.

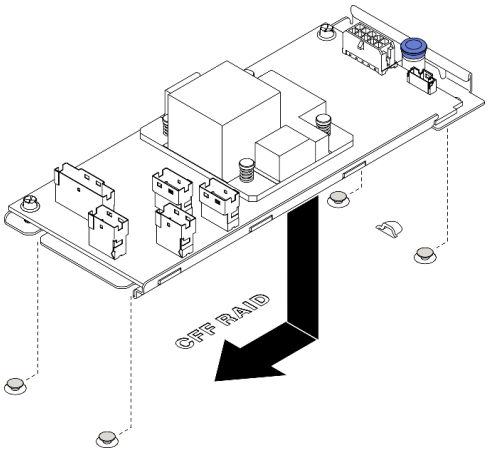

Figure 75. Internal CFF adapter installation

Step 3. Close the release pin to secure the CFF adapter into position.

Step 4. Connect the cables to the CFF adapter. See "Internal CFF RAID adapter cable routing" on page 53.

Demo video

Watch the procedure on YouTube

Install a processor-heat-sink module

The processor and heat sink are removed together as part of a processor-heat-sink-module (PHM) assembly. PHM installation requires a Torx T30 driver.

About this task

S002

CAUTION:
The power-control button on the device and the power switch on the power supply do not turn off the electrical current supplied to the device. The device also might have more than one power cord. To remove all electrical current from the device, ensure that all power cords are disconnected from the power source.

Attention:

- Read "Installation guidelines" on page 60 to ensure that you work safely.
- Power off the server and disconnect all power cords for this task.
- Prevent exposure to static electricity, which might lead to system halt and loss of data, by keeping static-sensitive components in their static-protective packages until installation, and handling these devices with an electrostatic-discharge wrist strap or other grounding system.
- Each processor socket must always contain a cover or a PHM. When removing or installing a PHM, protect empty processor sockets with a cover.

- Do not touch the processor socket or processor contacts. Processor-socket contacts are very fragile and easily damaged. Contaminants on the processor contacts, such as oil from your skin, can cause connection failures.
- Do not allow the thermal grease on the processor or heat sink to come in contact with anything. Contact with any surface can compromise the thermal grease, rendering it ineffective. Thermal grease can damage components, such as the electrical connectors in the processor socket.
- Remove and install only one PHM at a time. If the system board supports multiple processors, install the PHMs starting with the first processor socket.

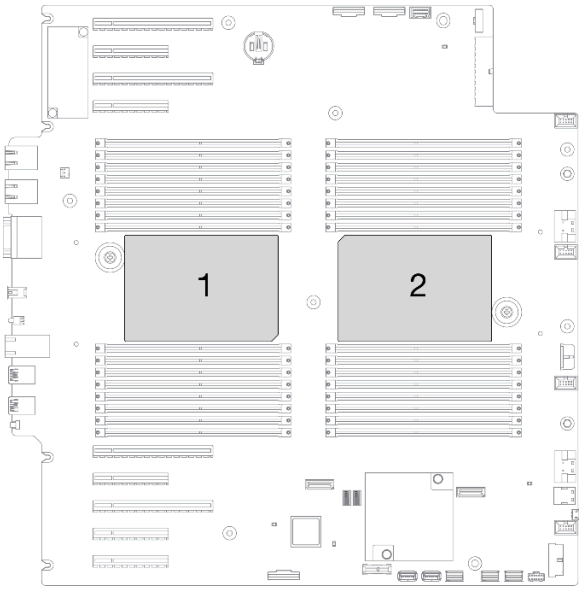

Figure 76. Processor locations on system board

Notes:

- The heat sink, processor, and processor carrier for your system might be different from those shown in the illustrations.
- PHMs are keyed for the socket where they can be installed and for their orientation in the socket.
- See https://serverproven.lenovo.com/ for a list of processors supported for your server. All processors on the system board must have the same speed, number of cores, and frequency.
- Before you install a new PHM or replacement processor, update your system firmware to the latest level. See "Update the firmware" on page 161.
- Installing an additional PHM can change the memory requirements for your system. See "Technical rules for memory modules" on page 65 for a list of processor-to-memory relationships.

The following illustration shows the components of the PHM.

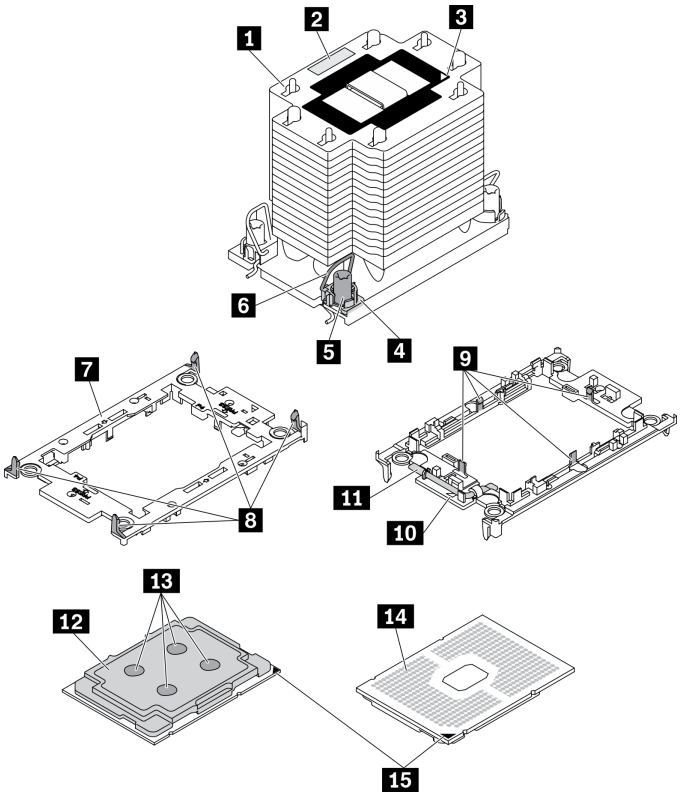

Figure 77. PHM components

1 Heat sink	9 Clips to secure processor in carrier
2 Processor identification label	10 Carrier triangular mark
3 Heat sink triangular mark	11 Processor ejector handle
4 Nut and wire bail retainer	12 Processor heat spreader
5 Torx T30 nut	13 Thermal grease
6 Anti-tilt wire bail	14 Processor contacts
7 Processor carrier	15 Processor triangular mark
8 Clips to secure carrier to heat sink	

Procedure

Step 1. Remove the processor socket cover, if one is installed on the processor socket, by placing your fingers in the half-circles at each end of the cover and lifting it from the system board.

Step 2. Install the processor-heat-sink module into the system board socket.

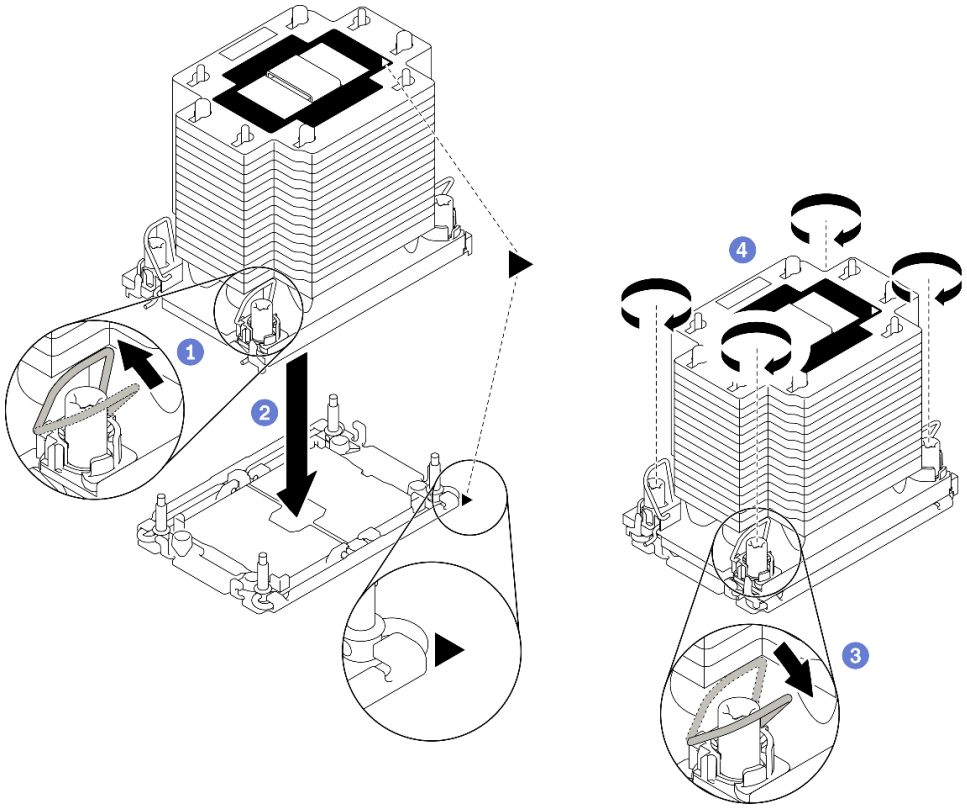

Figure 78. Installing a PHM

a. ❶ Rotate the anti-tilt wire bails inward.

b. ❷ Align the triangular mark and four Torx T30 nuts on the PHM with the triangular mark and threaded posts of the processor socket; then, insert the PHM into the processor socket.

c. ❸ Rotate the anti-tilt wire bails outward until they engage with the hooks in the socket.

d. ❹ Fully tighten the Torx T30 nuts *in the installation sequence shown* on the heat-sink label. Tighten the screws until they stop; then, visually inspect to make sure that there is no gap between the screw shoulder beneath the heat sink and the processor socket. (For reference, the torque required for the fasteners to fully tighten is 1.1 newton-meters, 10 inch-pounds).

After you finish

1. If there are memory modules to install, install them. See "Install a memory module" on page 124.

Demo video

Watch the procedure on YouTube

Install a memory module

Use this information to install a memory module.

About this task

S002

CAUTION:
The power-control button on the device and the power switch on the power supply do not turn off the electrical current supplied to the device. The device also might have more than one power cord. To remove all electrical current from the device, ensure that all power cords are disconnected from the power source.

See "Memory module installation rules and order" on page 63 for detailed information about memory configuration and setup.

Attention:

- Read "Installation guidelines" on page 60 to ensure that you work safely.
- Power off the server and disconnect all power cords for this task.
- Memory modules are sensitive to static discharge and require special handling. Refer to the standard guidelines for "Handling static-sensitive devices" on page 62:
  - Always wear an electrostatic-discharge strap when removing or installing memory modules. Electrostatic-discharge gloves can also be used.
  - Never hold two or more memory modules together so that they do not touch each other. Do not stack memory modules directly on top of each other during storage.
  - Never touch the gold memory module connector contacts or allow these contacts to touch the outside of the memory module connector housing.
  - Handle memory modules with care: never bend, twist, or drop a memory module.
  - Do not use any metal tools (such as jigs or clamps) to handle the memory modules, because the rigid metals may damage the memory modules.
  - Do not insert memory modules while holding packages or passive components, which can cause package cracks or detachment of passive components by the high insertion force.

Procedure

Step 1. Touch the static-protective package that contains the memory module to any unpainted surface on the outside of the server. Then, take the memory module out of the package and place it on a static-protective surface.

Step 2. Locate the required memory module slot on the system board.

Note: Ensure that you observe the installation rules and sequence in "Technical rules for memory modules" on page 65.

Step 3. Install the memory module into the slot.

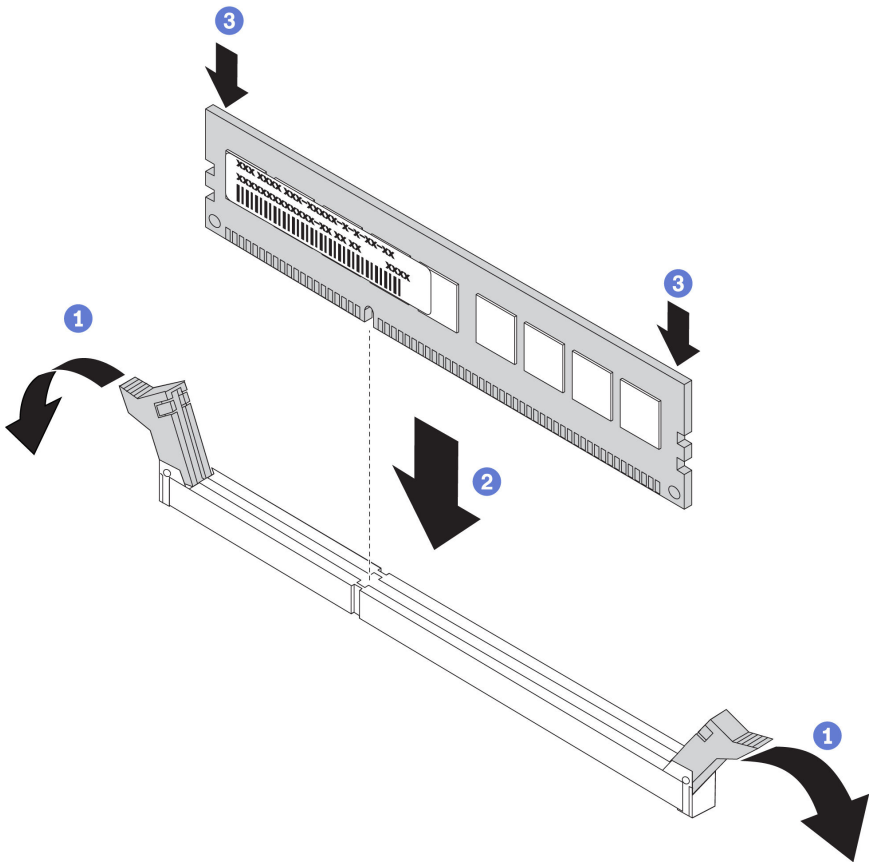

Figure 79. Memory module installation

a. ❶ Open the retaining clip on each end of the memory module slot.

   Attention: To avoid breaking the retaining clips or damaging the memory module slots, open and close the clips gently.

b. ❷ Align the memory module with the slot, and gently place the memory module on the slot with both hands.

c. ❸ Firmly press both ends of the memory module straight down into the slot until the retaining clips snap into the locked position.

   Note: If there is a gap between the memory module and the retaining clips, the memory module has not been correctly inserted. In this case, open the retaining clips, remove the memory module, and then reinsert it.

Demo video

Watch the procedure on YouTube

Install the M.2 boot adapter

Use this information to install the M.2 boot adapter.

About this task

S002

CAUTION:
The power-control button on the device and the power switch on the power supply do not turn off the electrical current supplied to the device. The device also might have more than one power cord. To remove all electrical current from the device, ensure that all power cords are disconnected from the power source.

Attention:

- Read "Installation guidelines" on page 60 to ensure that you work safely.
- Power off the server and disconnect all power cords for this task.
- Prevent exposure to static electricity, which might lead to system halt and loss of data, by keeping static-sensitive components in their static-protective packages until installation, and handling these devices with an electrostatic-discharge wrist strap or other grounding system.

Procedure

Step 1. Install the M.2 boot adapter

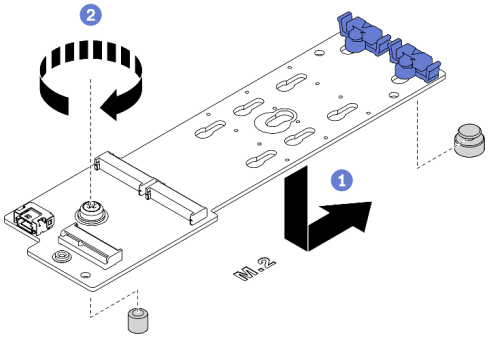

Figure 80. M.2 boot adapter installation

a. ❶ Insert the M.2 boot adapter into the chassis as shown.

b. ❷ Tighten the screw to secure the M.2 boot adapter to the chassis.

Step 2. Connect the cables to the M.2 boot adapter.

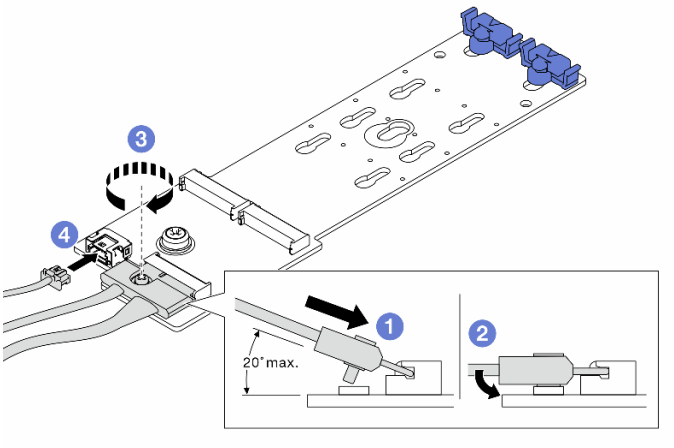

Figure 81. Connecting M.2 cables

a. ❶ Tilt the connector at an angle of 20 degrees or lower, and insert it until its bottom surface reaches the ramp.

b. ❷ Press the connector down flat.

c. ❸ Tighten the screw on the signal cable.

d. ❹ Connect the power cable.

Step 3. Connect the power cable and the signal cable to the system board. See "M.2 boot adapter cable routing" on page 54.

Demo video

Watch the procedure on YouTube

Adjust the retainer on the M.2 boot adapter

Use this information to adjust the retainer on the M.2 boot adapter.

About this task

S002

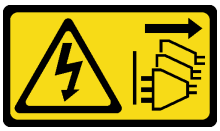

CAUTION:
The power-control button on the device and the power switch on the power supply do not turn off the electrical current supplied to the device. The device also might have more than one power cord. To remove all electrical current from the device, ensure that all power cords are disconnected from the power source.

Attention:

- Read "Installation guidelines" on page 60 to ensure that you work safely.
- Power off the server and disconnect all power cords for this task.

- Prevent exposure to static electricity, which might lead to system halt and loss of data, by keeping static-sensitive components in their static-protective packages until installation, and handling these devices with an electrostatic-discharge wrist strap or other grounding system.

Before adjusting the retainer on the M.2 boot adapter, locate the correct keyhole that the retainer should be installed into to accommodate the particular size of the M.2 drive you wish to install.

Note: The M.2 boot adapter might be different from the following illustrations, but the adjustment method is the same.

Procedure

Step 1. Adjust the retainer on the M.2 boot adapter.

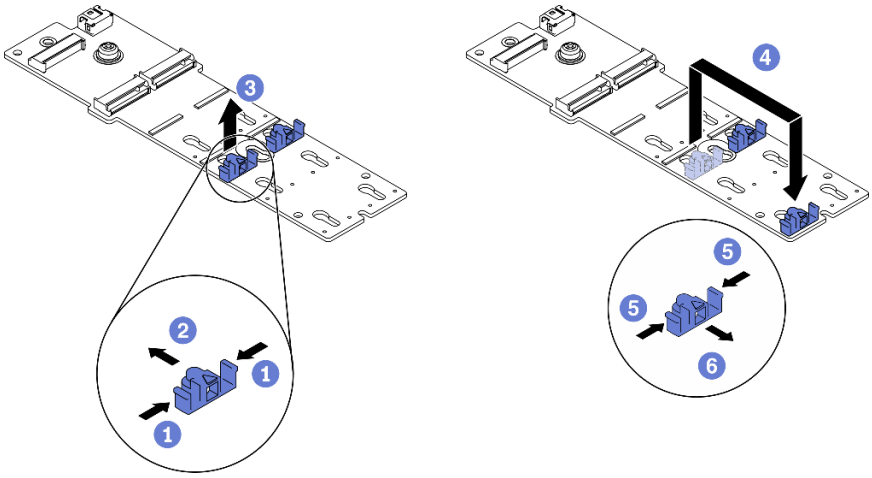

Figure 82. M.2 retainer adjustment

a. ❶ Press both sides of the retainers.
b. ❷ Move the retainer forward until it is in the large opening of the keyhole.
c. ❸ Take the retainer out of the keyhole.
d. ❹ Insert the retainer into the correct keyhole.
e. ❺ Press both sides of the retainer.
f. ❻ Slide the retainer backwards until it is seated in place.

Demo video

Watch the procedure on YouTube

Install an M.2 drive

Use this information to install an M.2 drive.

About this task

S002

CAUTION:
The power-control button on the device and the power switch on the power supply do not turn off the electrical current supplied to the device. The device also might have more than one power cord. To remove all electrical current from the device, ensure that all power cords are disconnected from the power source.

Attention:

- Read "Installation guidelines" on page 60 to ensure that you work safely.
- Power off the server and disconnect all power cords for this task.
- Prevent exposure to static electricity, which might lead to system halt and loss of data, by keeping static-sensitive components in their static-protective packages until installation, and handling these devices with an electrostatic-discharge wrist strap or other grounding system.

Locate the M.2 drive slot on the M.2 adapter.

Note: For some M.2 adapters that support two identical M.2 drives, install the M.2 drive in slot 0 first.

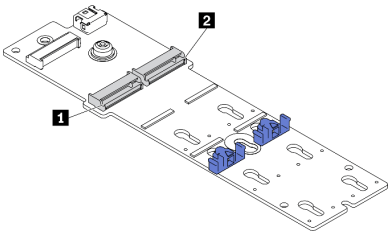

Figure 83. M.2 drive slot

Table 39. M.2 drive slot locations on M.2 boot adapter

1 M.2 boot adapter slot 0	2 M.2 boot adapter slot 1

Procedure

Step 1. Install the M.2 drive

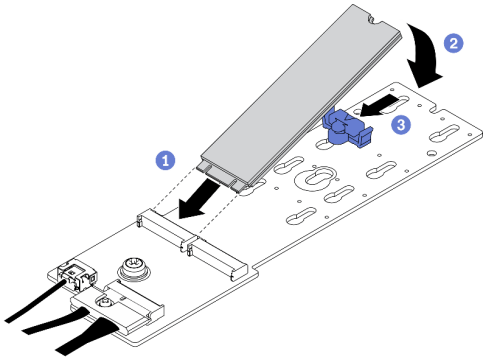

Figure 84. M.2 drive installation

a. 1 Insert the M.2 drive at an angle of approximately 30 degrees into the connector.
b. 2 Pivot the M.2 drive down until the notch catches on the lip of the retainer.
c. 3 Slide the retainer forward (towards the connector) to secure the M.2 drive into place.

Demo video

Watch the procedure on YouTube

Install the intrusion switch

Use this information to install the intrusion switch.

About this task

S002

CAUTION:
The power-control button on the device and the power switch on the power supply do not turn off the electrical current supplied to the device. The device also might have more than one power cord. To remove all electrical current from the device, ensure that all power cords are disconnected from the power source.

Attention:

- Read "Installation guidelines" on page 60 to ensure that you work safely.
- Power off the server and disconnect all power cords for this task.
- Prevent exposure to static electricity, which might lead to system halt and loss of data, by keeping static-sensitive components in their static-protective packages until installation, and handling these devices with an electrostatic-discharge wrist strap or other grounding system.

Procedure

Step 1. Insert the cable of the new intrusion switch and then the tab on the intrusion switch frame into the corresponding hole in the chassis. Then, push the intrusion switch in until it is securely seated.

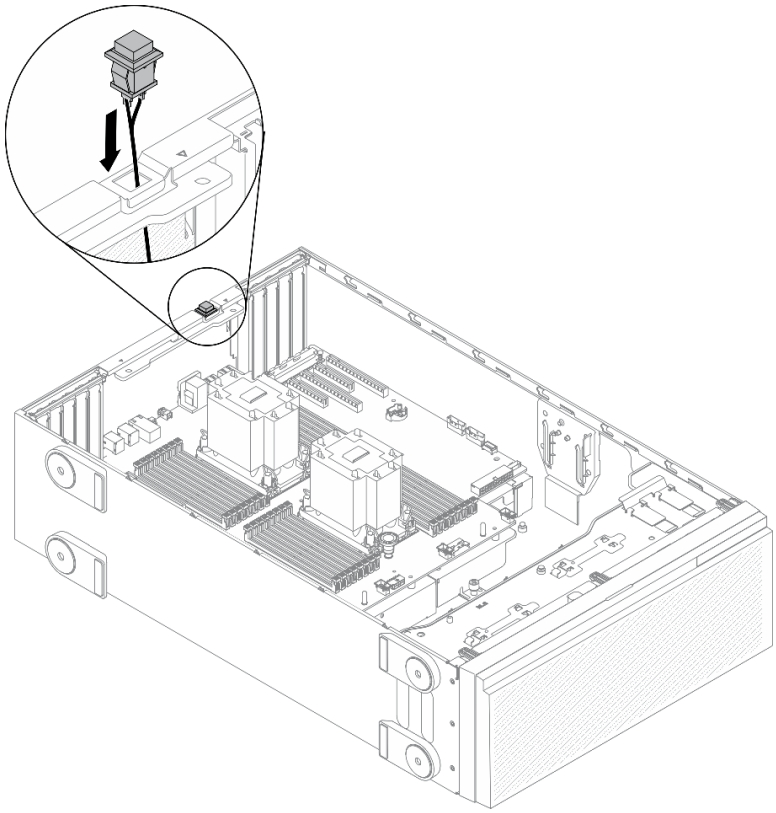

Figure 85. Intrusion switch installation

Step 2. Connect the intrusion switch cable to the system board. See "System board components" on page 33.

Demo video

Watch the procedure on YouTube

Install the fan cage assembly

Use this procedure to install the fan cage assembly.

About this task

S002

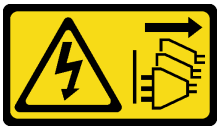

CAUTION:
The power-control button on the device and the power switch on the power supply do not turn off the electrical current supplied to the device. The device also might have more than one power cord. To remove all electrical current from the device, ensure that all power cords are disconnected from the power source.

Attention:

- Read "Installation guidelines" on page 60 to ensure that you work safely.
- Power off the server and disconnect all power cords for this task.
- Prevent exposure to static electricity, which might lead to system halt and loss of data, by keeping static-sensitive components in their static-protective packages until installation, and handling these devices with an electrostatic-discharge wrist strap or other grounding system.

Procedure

Step 1. Install the fan cage assembly.

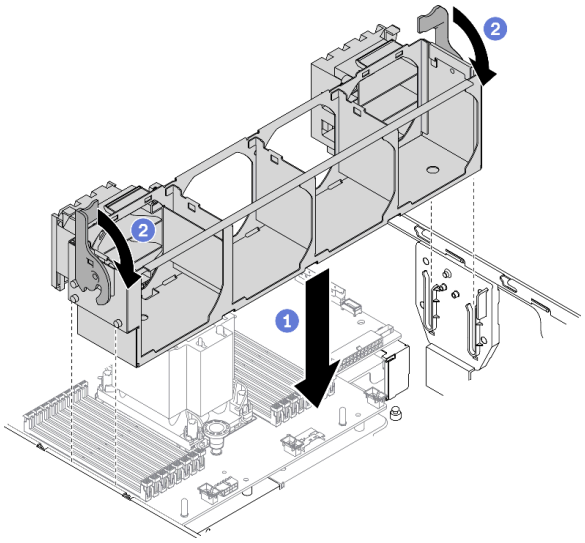

Figure 86. Fan cage assembly installation

a. ❶ Align the fan cage assembly to the slots on both sides of the server, and lower it into the server.

b. ❷ Rotate the fan cage release latches down until they stop.

Demo video

Watch the procedure on YouTube

Install a hot-swap fan

Use this procedure to install a hot-swap fan.

About this task

S017

CAUTION:
Hazardous moving fan blades nearby. Keep fingers and other body parts away.

S033

CAUTION:
Hazardous energy present. Voltages with hazardous energy might cause heating when shorted with metal, which might result in spattered metal, burns, or both.

Attention:

- Read "Installation guidelines" on page 60 to ensure that you work safely.
- Prevent exposure to static electricity, which might lead to system halt and loss of data, by keeping static-sensitive components in their static-protective packages until installation, and handling these devices with an electrostatic-discharge wrist strap or other grounding system.

Procedure

Step 1. Locate the required fan slot in the fan cage.

Note: Ensure that you observe the installation rules and sequence in "Technical rules for system fans" on page 78.

Step 2. Align the fan over the fan slot in the fan cage assembly.

Step 3. Insert the fan into the fan cage assembly until it clicks into place.

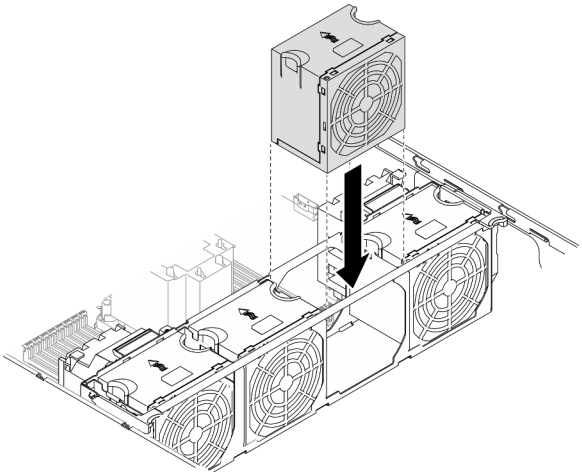

Figure 87. Hot-swap fan installation

Demo video

Watch the procedure on YouTube

Install a PCIe adapter holder

Use this information to install a PCIe adapter holder.

About this task

S002

CAUTION:
The power-control button on the device and the power switch on the power supply do not turn off the electrical current supplied to the device. The device also might have more than one power cord. To remove all electrical current from the device, ensure that all power cords are disconnected from the power source.

Attention:

- Read "Installation guidelines" on page 60 to ensure that you work safely.
- Power off the server and disconnect all power cords for this task.
- Prevent exposure to static electricity, which might lead to system halt and loss of data, by keeping static-sensitive components in their static-protective packages until installation, and handling these devices with an electrostatic-discharge wrist strap or other grounding system.

Notes:

- If you have installed one double-wide GPU adapter in PCIe slot 1, or three double-wide GPU adapters in PCIe slot 1, 3, and 7; install a GPU filler for proper cooling and airflow.
- If you have installed a full-length GPU adapter, install a PCIe adapter holder corresponding to the PCIe slot for your full-length GPU adapter.

Procedure

Step 1. Align the PCIe adapter holder with the corresponding studs on the fan cage.

Note: The studs on the fan cage are positioned differently for the left PCIe adapter holder and right PCIe adapter holder.

Step 2. Insert the PCIe adapter holder onto the fan cage until it snaps into position.

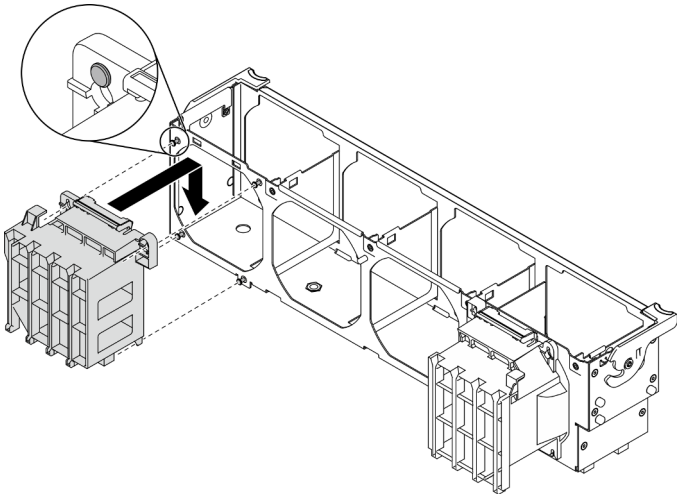

Figure 88. PCIe adapter holder installation

Demo video

Watch the procedure on YouTube

Install an A2/L4 GPU air duct

Follow the instructions in this section to install an A2/L4 GPU air duct.

About this task

S002

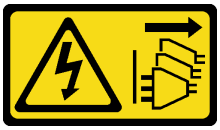

CAUTION:
The power-control button on the device and the power switch on the power supply do not turn off the electrical current supplied to the device. The device also might have more than one power cord. To remove all electrical current from the device, ensure that all power cords are disconnected from the power source.

Attention:

- Read "Installation guidelines" on page 60 to ensure that you work safely.
- Power off the server and disconnect all power cords for this task.
- Prevent exposure to static electricity, which might lead to system halt and loss of data, by keeping static-sensitive components in their static-protective packages until installation, and handling these devices with an electrostatic-discharge wrist strap or other grounding system.
- When one or more **A2/L4 GPUs** are installed between PCIe slots 1 and 4 or between PCIe slots 5 and 8, one or two **A2/L4 GPU air ducts** are required to be installed on the fan cage at the same side as the installed A2/L4 GPU for proper cooling and airflow.
- See "Technical rules for GPU" on page 63 for detailed information about the technical rules for GPU installation.

Procedure

Step 1. Align the A2/L4 GPU air duct with the studs on the fan cage corresponding to the installed A2/L4 GPU.

Attention:

- An A2/L4 GPU air duct is required to be installed in the same air zone as an installed A2/L4 GPU.
- The studs on the fan cage are positioned differently for different A2/L4 GPU air ducts.

Step 2. Insert the A2/L4 GPU air duct onto the fan cage until it snaps into position.

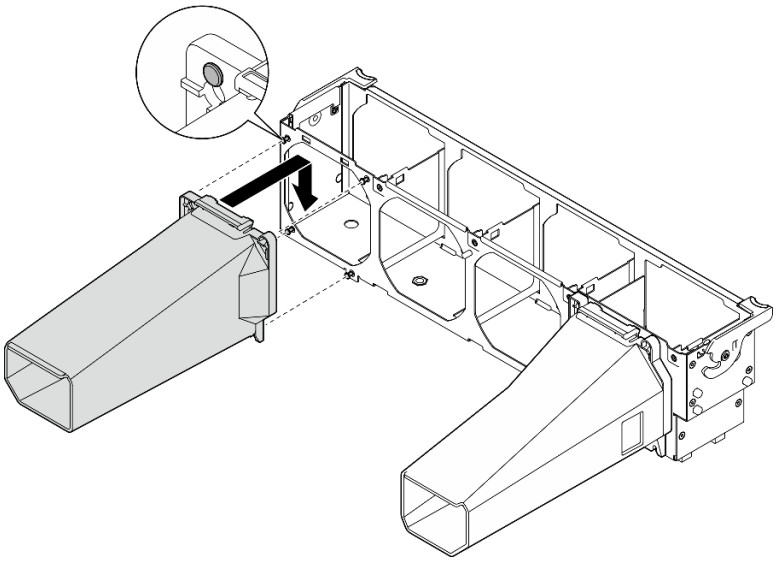

Figure 89. Installation of an A2/L4 GPU air duct

Install a PCIe adapter

Use this information to install a PCIe adapter.

About this task

S002

CAUTION:
The power-control button on the device and the power switch on the power supply do not turn off the electrical current supplied to the device. The device also might have more than one power cord. To remove all electrical current from the device, ensure that all power cords are disconnected from the power source.

Attention:

- Read "Installation guidelines" on page 60 to ensure that you work safely.
- Power off the server and disconnect all power cords for this task.
- Prevent exposure to static electricity, which might lead to system halt and loss of data, by keeping static-sensitive components in their static-protective packages until installation, and handling these devices with an electrostatic-discharge wrist strap or other grounding system.

Notes:

- Depending on the specific type, your PCIe adapter might look different from the illustration in this topic.
- Use any documentation that comes with the PCIe adapter and follow those instructions in addition to the instructions in this topic.

Procedure

Step 1. Locate the applicable PCIe slot. See "Specifications" on page 3 to identify the different types of PCIe slots in your server.

Note: Ensure that you observe the installation rules and sequence in "Technical rules for PCIe slots" on page 77.

Step 2. If a bracket is installed in the PCIe slot, remove it. Store the bracket for the PCIe slot in case that you later remove the PCIe adapter and need the bracket to cover the place.

Step 3. Install the PCIe adapter.

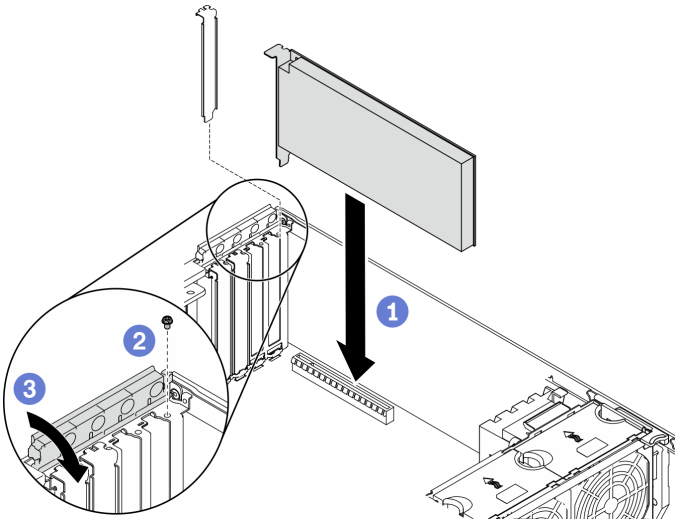

Figure 90. PCIe adapter installation

Note: Make sure the PCIe adapter retainer is in the opened position.

a. ❶ Align the PCIe adapter to the PCIe slot; then, gently press both ends of the PCIe adapter until it is securely seated in the PCIe slot.

b. ❷ Fasten the screw to secure the PCIe adapter.

c. ❸ Close the PCIe adapter retainer.

Step 4. Depending on the type of PCIe adapter, you might need to connect one or more cables. Refer to the documentation that comes with the PCIe adapter for specific information.

After you finish

If you have installed a T4 GPU adapter, install a T4 filler onto the server cover. See "Install a T4 filler" on page 143.

Demo video

Watch the procedure on YouTube

Install a full-length GPU adapter

Use this information to install a full-length GPU adapter.

About this task

S002

CAUTION:
The power-control button on the device and the power switch on the power supply do not turn off the electrical current supplied to the device. The device also might have more than one power cord. To remove all electrical current from the device, ensure that all power cords are disconnected from the power source.

Attention:

- Read "Installation guidelines" on page 60 to ensure that you work safely.
- Power off the server and disconnect all power cords for this task.
- Prevent exposure to static electricity, which might lead to system halt and loss of data, by keeping static-sensitive components in their static-protective packages until installation, and handling these devices with an electrostatic-discharge wrist strap or other grounding system.

Notes:

- Depending on the specific type, your full-length GPU adapter might look different from the illustration in this topic.
- Use any documentation that comes with the full-length GPU adapter and follow those instructions in addition to the instructions in this topic.

Procedure

Step 1. Locate the applicable PCIe slot. See "Specifications" on page 3 to identify the different types of PCIe slots in your server.

Note: Ensure that you observe the installation rules and sequence in "Technical rules for PCIe slots" on page 77.

Step 2. Make sure you have installed a PCIe adapter holder corresponding to the PCIe slot for your full-length GPU adapter. See "Install a PCIe adapter holder" on page 134.

Step 3. If you have installed one double-wide GPU adapter in PCIe slot 1, or three double-wide GPU adapters in PCIe slot 1, 3, and 7; make sure you have installed a GPU filler for proper cooling and airflow. See "Install a GPU filler" on page 142.

Step 4. If necessary, route the power cable for the full-length GPU adapter.

a. Remove all the fans. See "Remove a hot-swap fan" on page 95.

b. Remove the fan cage. See "Remove the fan cage assembly" on page 97.

c. Connect the power cable to the power distribution board; then, route the power cable and secure it under the clip. See "GPU cable routing" on page 52.

d. Reinstall the fan cage. See "Install the fan cage assembly" on page 132.

e. Reinstall all the fans. See "Install a hot-swap fan" on page 133.

Step 5. If a bracket is installed in the PCIe slot, remove it. Store the bracket for the PCIe slot in case that you later remove the PCIe adapter and need the bracket to cover the place.

Step 6. Install the full-length GPU adapter.

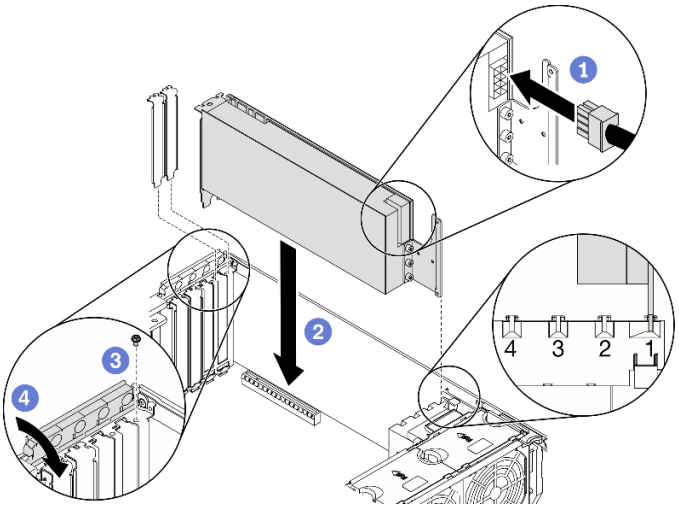

Figure 91. Full-length GPU adapter installation

Note: Make sure the PCIe adapter retainer is in the opened position.

a. ❶ Connect the power cable to the full-length GPU adapter.

b. ❷ Align the full-length GPU adapter to the PCIe adapter holder and the PCIe slot; then, gently press both ends of the full-length GPU adapter until it is securely seated in the PCIe slot.

c. ❸ Fasten the screw to secure the GPU adapter.

d. ❹ Close the PCIe adapter retainer.

After you finish

If you have installed one double-wide GPU adapter in PCIe slot 1, or three double-wide GPU adapters in PCIe slot 1, 3, and 7; install a GPU filler. See "Install a GPU filler" on page 142.

Demo video

Watch the procedure on YouTube

Install an NVLink bridge

Use this information to install an NVLink bridge.

About this task

S002

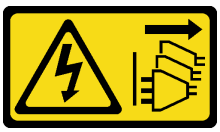

CAUTION:
The power-control button on the device and the power switch on the power supply do not turn off the electrical current supplied to the device. The device also might have more than one power cord. To remove all electrical current from the device, ensure that all power cords are disconnected from the power source.

Attention:

- Read “Installation guidelines” on page 60 to ensure that you work safely.
- Power off the server and disconnect all power cords for this task.
- Prevent exposure to static electricity, which might lead to system halt and loss of data, by keeping static-sensitive components in their static-protective packages until installation, and handling these devices with an electrostatic-discharge wrist strap or other grounding system.

Procedure

Step 1. Remove the NVLink covers.

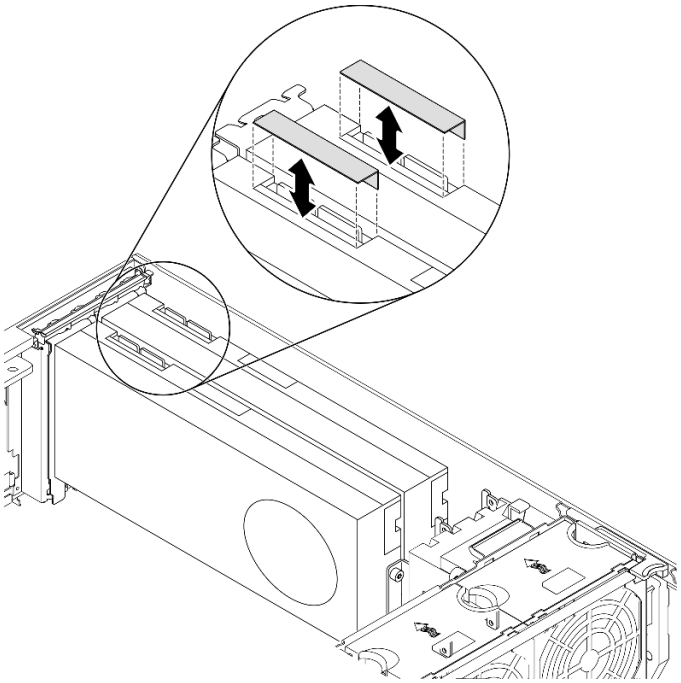

Figure 92. NVLink covers removal

Step 2. Note the orientation of the NVLink bridge; then, install the NVLink bridge as shown.

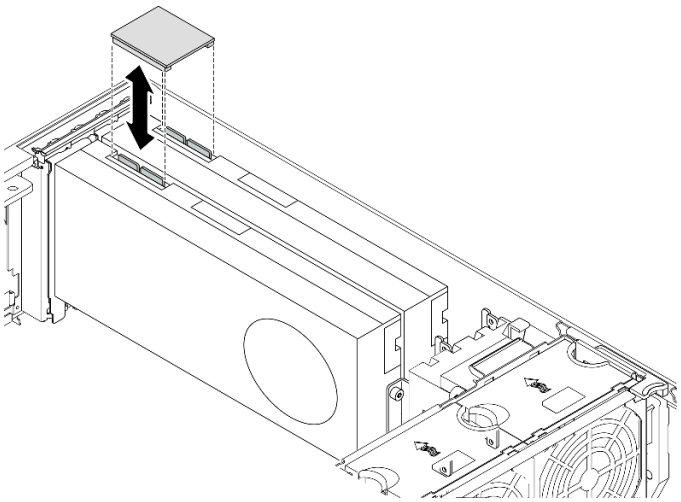

Figure 93. NVLink bridge installation

Demo video

Watch the procedure on YouTube

Install a GPU filler

Use this information to install a GPU filler.

About this task

S033

CAUTION:
Hazardous energy present. Voltages with hazardous energy might cause heating when shorted with metal, which might result in spattered metal, burns, or both.

S017

CAUTION:
Hazardous moving fan blades nearby. Keep fingers and other body parts away.

Attention:

- Read "Installation guidelines" on page 60 to ensure that you work safely.
- Prevent exposure to static electricity, which might lead to system halt and loss of data, by keeping static-sensitive components in their static-protective packages until installation, and handling these devices with an electrostatic-discharge wrist strap or other grounding system.

Notes:

- If you have installed one double-wide GPU adapter in PCIe slot 1, or three double-wide GPU adapters in PCIe slot 1, 3, and 7; install a GPU filler for proper cooling and airflow.
- If you have installed a full-length GPU adapter, install a PCIe adapter holder corresponding to the PCIe slot for your full-length GPU adapter.

Procedure

Step 1. Align the GPU filler with the corresponding slots on the air baffle.

Step 2. Insert the GPU filler onto the air baffle until it snaps into position

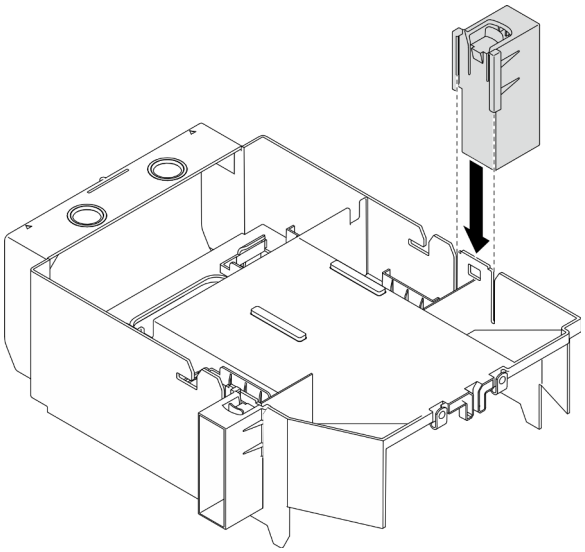

Figure 94. GPU filler installation

Demo video

Watch the procedure on YouTube

Install a T4 filler

Use this information to install a T4 filler.

About this task

S017

CAUTION:
Hazardous moving fan blades nearby. Keep fingers and other body parts away.

S033

CAUTION:
Hazardous energy present. Voltages with hazardous energy might cause heating when shorted with metal, which might result in spattered metal, burns, or both.

Attention:

- Read "Installation guidelines" on page 60 to ensure that you work safely.

- Prevent exposure to static electricity, which might lead to system halt and loss of data, by keeping static-sensitive components in their static-protective packages until installation, and handling these devices with an electrostatic-discharge wrist strap or other grounding system.

Note: If you have installed a T4 GPU adapter, install a T4 filler onto the server cover for proper cooling and airflow.

Procedure

Step 1. Locate the corresponding location on the bottom of the server cover for the applicable PCIe slot.

Step 2. Wipe the surface with an alcohol cleaning pad.

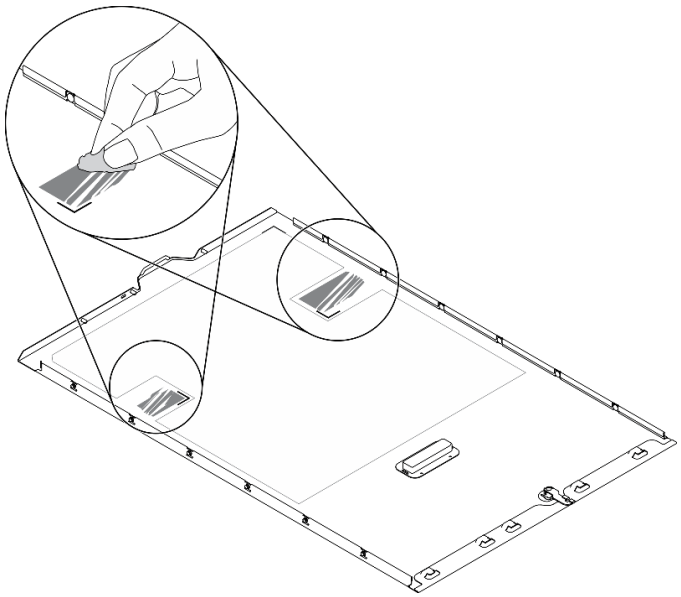

Figure 95. Cleaning surface

Step 3. Peel away the plastic and apply the T4 filler. Make sure the T4 filler is aligned to the 1 corner mark.

Note: Make sure the alcohol has fully evaporated before applying the new T4 filler.

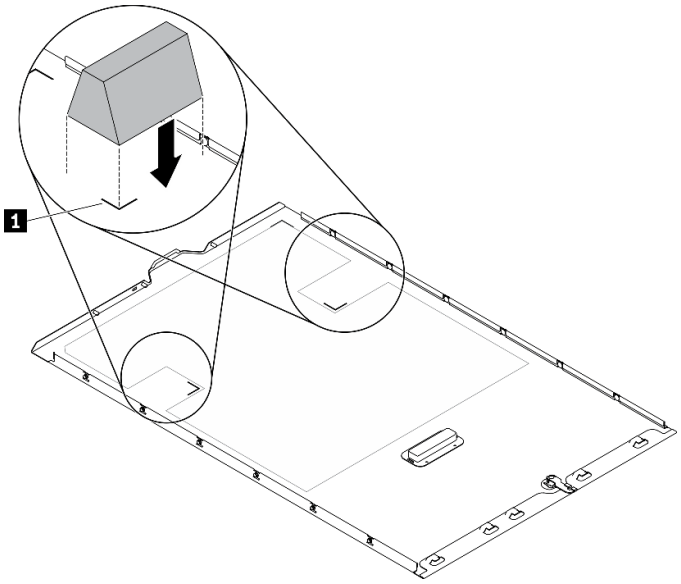

Figure 96. T4 filler installation

Install the air baffle

Follow this procedure to install the air baffle.

About this task

S033

CAUTION:
Hazardous energy present. Voltages with hazardous energy might cause heating when shorted with metal, which might result in spattered metal, burns, or both.

S017

CAUTION:
Hazardous moving fan blades nearby. Keep fingers and other body parts away.

Attention:

- Read "Installation guidelines" on page 60 to ensure that you work safely.
- Power off the server and disconnect all power cords for this task.
- Prevent exposure to static electricity, which might lead to system halt and loss of data, by keeping static-sensitive components in their static-protective packages until installation, and handling these devices with an electrostatic-discharge wrist strap or other grounding system.

Procedure

Step 1. Make sure that all cables inside the server have been properly routed so that they will not interfere with the air baffle. See Chapter 3 “Internal cable routing” on page 49.

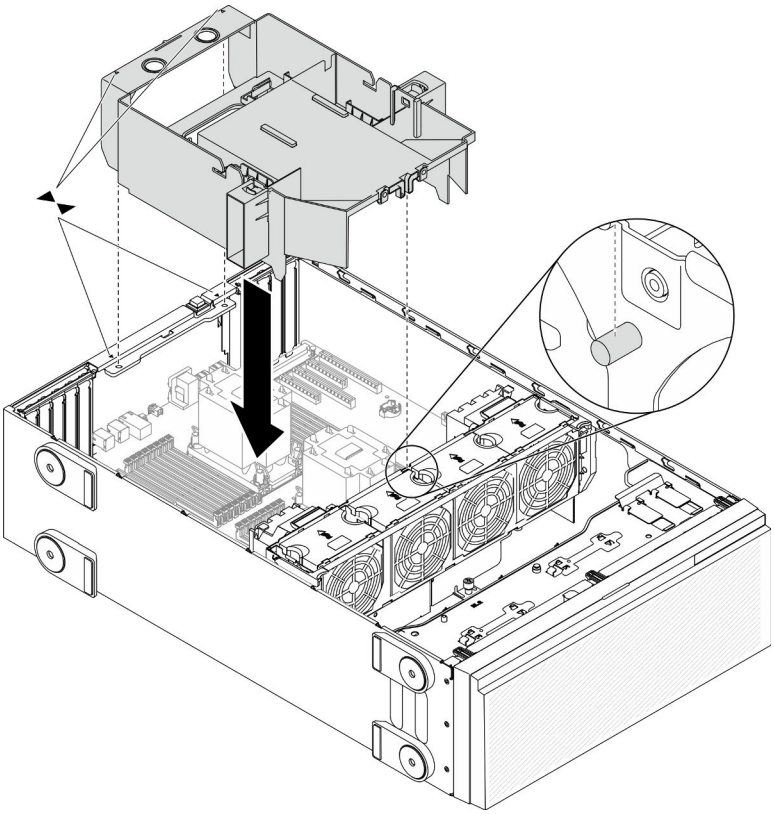

Figure 97. Air baffle installation

Step 2. Align the tabs on the air baffle with the corresponding slots on the rear of the chassis and the fan cage; then, lower the air baffle into the chassis and press the air baffle down until it is securely seated.

Demo video

Watch the procedure on YouTube

Install a flash power module

Use this information to install a flash power module.

About this task

S002

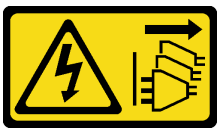

CAUTION:

The power-control button on the device and the power switch on the power supply do not turn off the electrical current supplied to the device. The device also might have more than one power cord. To remove all electrical current from the device, ensure that all power cords are disconnected from the power source.

Attention:

- Read "Installation guidelines" on page 60 to ensure that you work safely.
- Power off the server and disconnect all power cords for this task.
- Prevent exposure to static electricity, which might lead to system halt and loss of data, by keeping static-sensitive components in their static-protective packages until installation, and handling these devices with an electrostatic-discharge wrist strap or other grounding system.

Locate the flash power module slot on the air baffle.

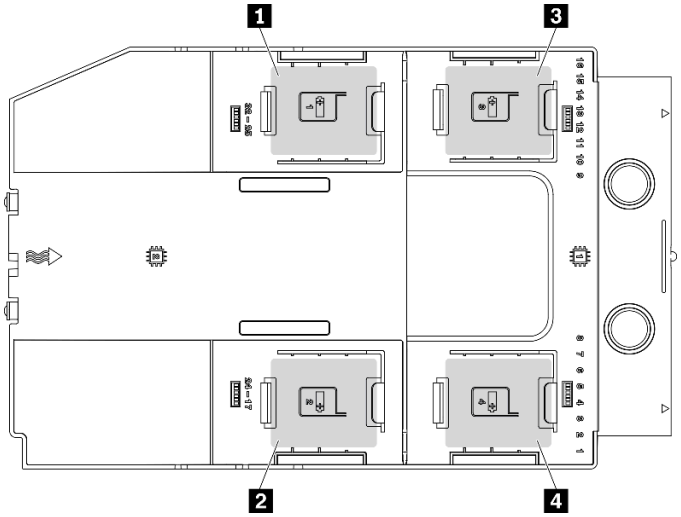

Figure 98. Flash power module slot location

Table 40. Flash power module slot location on air baffle

1 Flash power module slot 1	3 Flash power module slot 3
2 Flash power module slot 2	4 Flash power module slot 4

Procedure

Step 1. Install the flash power module.

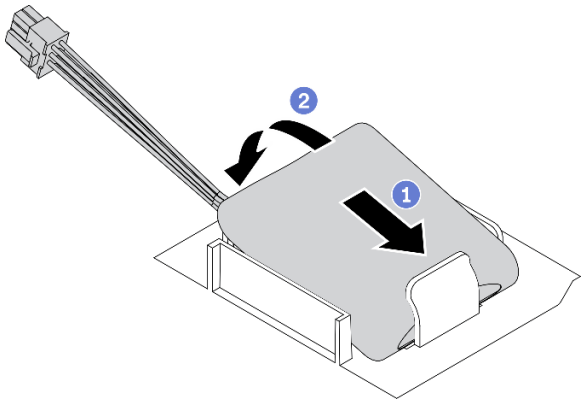

Figure 99. Flash power module installation

a. ❶ Note the orientation of the flash power module; then, gently insert the flash power module into the retaining clip at one side as shown.

b. ❷ Press the flash power module down on the other side until it snaps into place.

Step 2. Connect the flash power module cable to the RAID adapter.

Demo video

Watch the procedure on YouTube

Install the front bezel

Use this information to install the front bezel.

About this task

S033

CAUTION:
Hazardous energy present. Voltages with hazardous energy might cause heating when shorted with metal, which might result in spattered metal, burns, or both.

Attention:

- Read "Installation guidelines" on page 60 to ensure that you work safely.
- Prevent exposure to static electricity, which might lead to system halt and loss of data, by keeping static-sensitive components in their static-protective packages until installation, and handling these devices with an electrostatic-discharge wrist strap or other grounding system.

Procedure

Step 1. Install the front bezel.

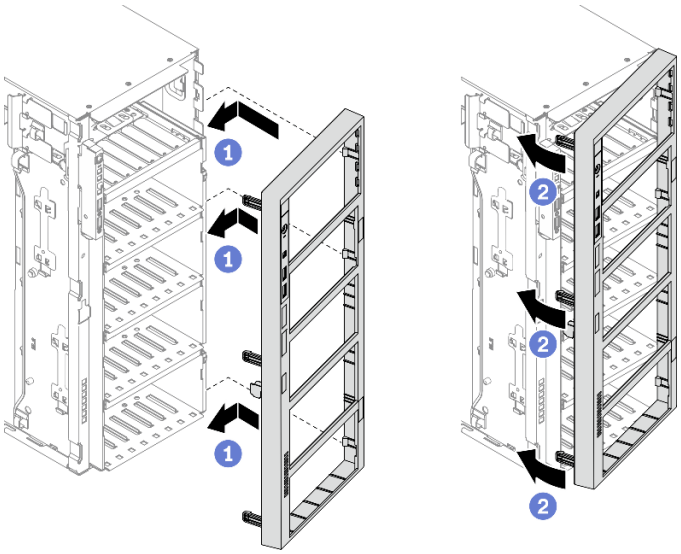

Figure 100. Front bezel installation

a. ❶ Align the three plastic tabs on the right side of the front bezel with the corresponding holes in the chassis.

b. ❷ Pivot the front bezel inward until it snaps into position on the left side.

Demo video

Watch the procedure on YouTube

Install the security door

Use this information to install the security door.

About this task

S033

CAUTION:
Hazardous energy present. Voltages with hazardous energy might cause heating when shorted with metal, which might result in spattered metal, burns, or both.

Attention:

- Read "Installation guidelines" on page 60 to ensure that you work safely.
- Prevent exposure to static electricity, which might lead to system halt and loss of data, by keeping static-sensitive components in their static-protective packages until installation, and handling these devices with an electrostatic-discharge wrist strap or other grounding system.

Procedure

Step 1. Install the security door.

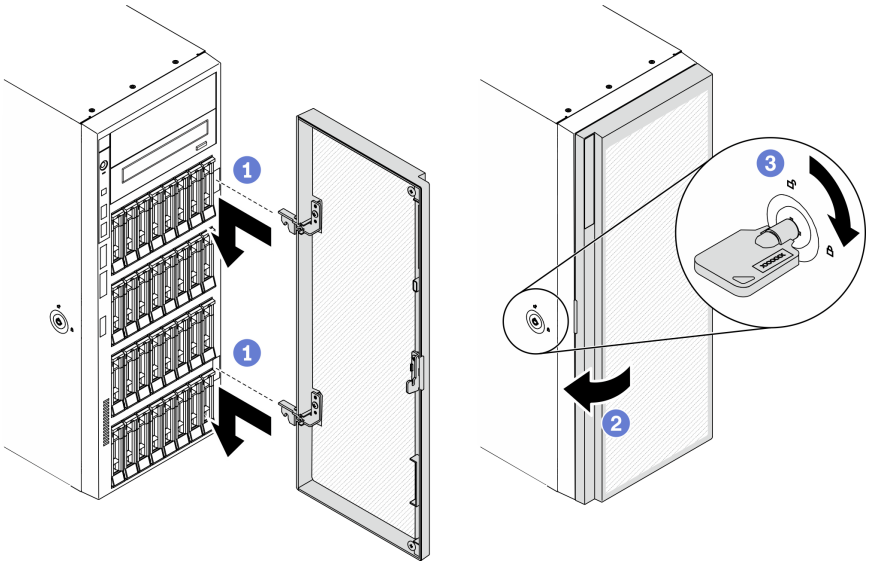

Figure 101. Security door installation

a. ❶ Align the two hooks on the security door with the corresponding holes in the front bezel; then, move the security door inward and then pull it slightly downward until it is secured in place by the hooks.

b. ❷ Close the security door.

c. ❸ Lock the server cover.

Demo video

Watch the procedure on YouTube

Install the server cover

Use this information to install the server cover.

About this task

S014

CAUTION:
Hazardous voltage, current, and energy levels might be present. Only a qualified service technician is authorized to remove the covers where the label is attached.

S017

CAUTION:

Hazardous moving fan blades nearby. Keep fingers and other body parts away.

S033

CAUTION:
Hazardous energy present. Voltages with hazardous energy might cause heating when shorted with metal, which might result in spattered metal, burns, or both.

Attention:

- Read "Installation guidelines" on page 60 to ensure that you work safely.
- Prevent exposure to static electricity, which might lead to system halt and loss of data, by keeping static-sensitive components in their static-protective packages until installation, and handling these devices with an electrostatic-discharge wrist strap or other grounding system.
- Ensure that all adapters and other components are installed and seated correctly and that you have not left loose tools or parts inside the server.
- Ensure that all internal cables are correctly routed. See Chapter 3 "Internal cable routing" on page 49.
- If you are installing a new server cover, attach the service label to the inside of the new server cover first if necessary.

  Note: A new server cover comes without a service label attached. If you need a service label, order it together with the new server cover. The service label is free of charge.

Procedure

Step 1. Install the server cover.

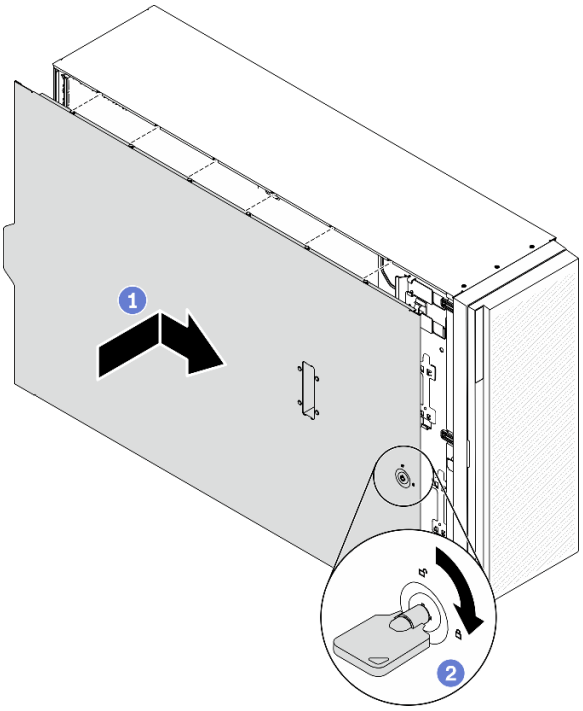

Figure 102. Server cover installation

Note: Before you slide the cover forward, ensure that all the tabs of the cover engage the chassis correctly. If all the tabs do not engage the chassis correctly, it will be very difficult to remove the cover later.

a. ❶ Lower the server cover onto the chassis until all tabs on both sides of the server cover engage the chassis. Then, slide the server cover towards the front of the chassis until the server cover stops and the front edge of the cover aligns with the edge of the front bezel.

b. ❷ Use the key to turn the cover lock to the locked position.

Demo video

Watch the procedure on YouTube

Install the foot stands

Use this information to install the foot stands.

About this task

S033

CAUTION:
Hazardous energy present. Voltages with hazardous energy might cause heating when shorted with metal, which might result in spattered metal, burns, or both.

Attention:

- Read "Installation guidelines" on page 60 to ensure that you work safely.
- Prevent exposure to static electricity, which might lead to system halt and loss of data, by keeping static-sensitive components in their static-protective packages until installation, and handling these devices with an electrostatic-discharge wrist strap or other grounding system.

Procedure

Step 1. For each foot stand, carefully align the pin and screw hole on the foot stand with the corresponding hole on the chassis; then, use a screwdriver to install a screw to secure the foot stand.

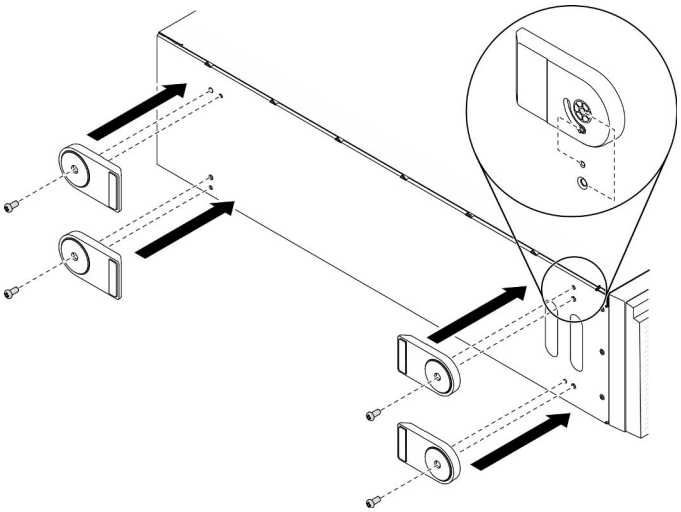

Figure 103. Foot stand installation

Step 2. For each foot stand, rotate the foot stand outwards.

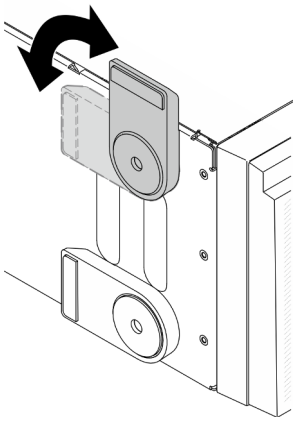

Figure 104. Foot stand adjustment

Important: To help the server stand steadily, ensure that the foot stands are rotated outward.

Demo video

Watch the procedure on YouTube

Install the tower to rack conversion kit

This section includes instructions on how to install the tower to rack conversion kit.

Install the EIA brackets

Step 1. If foot stands are installed on your tower server, lay the server on its side and remove them first.

a. For each foot stand, rotate the foot stand inwards.

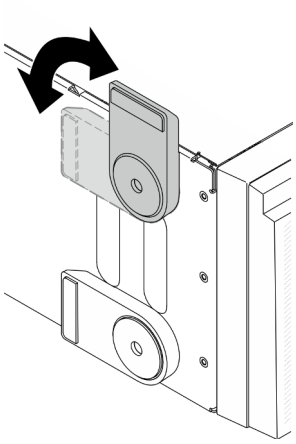

Figure 105. Adjusting foot stand

b. For each foot stand, use a screwdriver to remove the screw that secures the foot stand; then, remove the foot stand from the chassis.

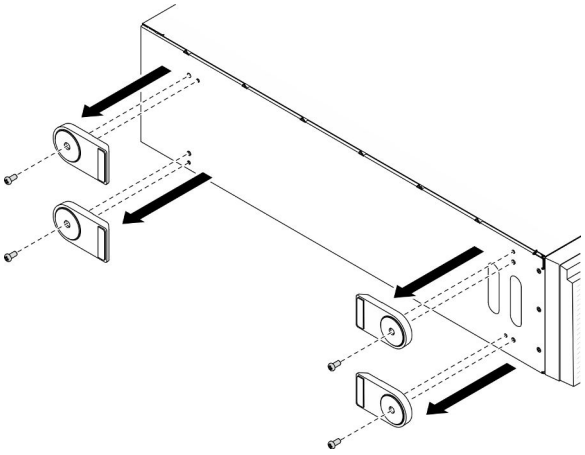

Figure 106. Removing foot stand

Step 2. Lay the server on its side; peel away the plastic and apply ruler label to rear corner of side cover as shown.

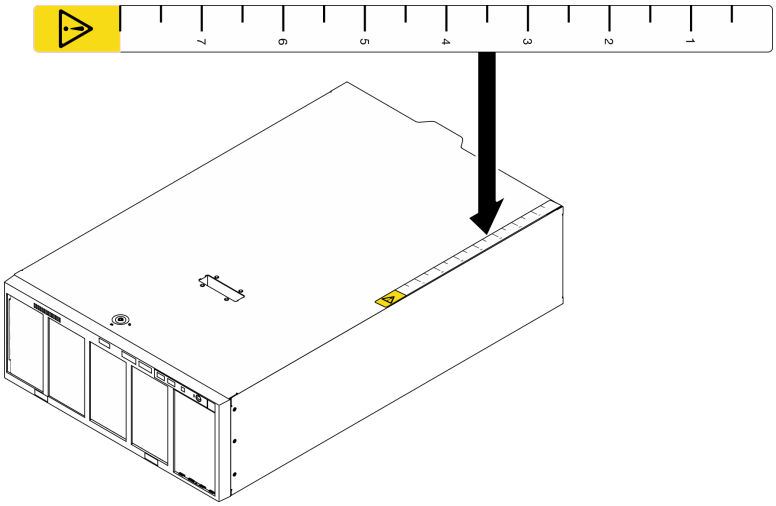

Figure 107. Applying ruler label

Step 3. Use a screwdriver to remove the three screws on the top of the chassis.

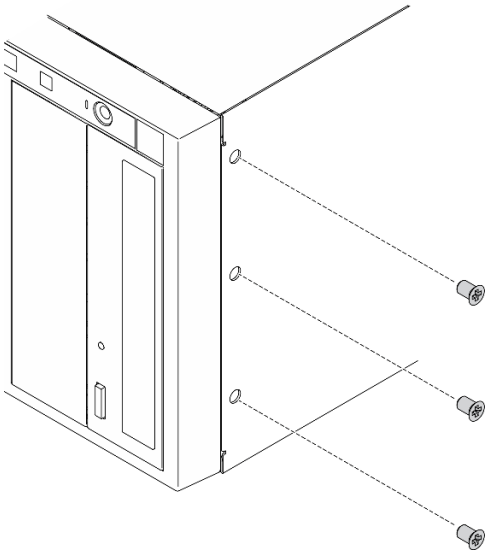

Figure 108. Removing screws on top of chassis

Step 4. Align the holes in the right EIA bracket with the corresponding holes on the top of the chassis; then, use a screwdriver to reinstall the three screws that you removed to secure the right EIA bracket.

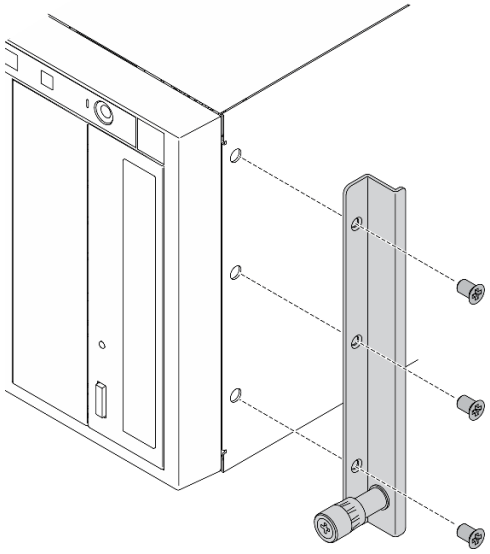

Figure 109. Installing right EIA bracket

Step 5. Align the holes in the left EIA bracket with the corresponding holes on the bottom of the chassis; then, use a screwdriver to install the three screws to secure the left EIA bracket.

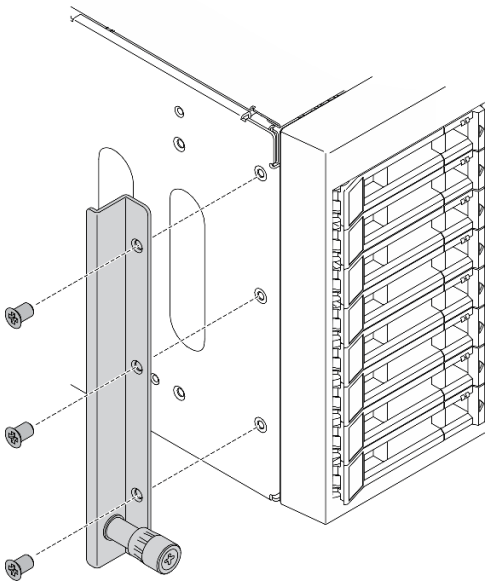

Figure 110. Installing left EIA bracket

Demo video

Watch the procedure on YouTube

Install the rail and latch covers

Note: For tower server installation, the edges on the rails or the friction caused by the installation might scratch or damage the chassis coating. Applying rail and latch covers can help reduce scratching when installing the server into a rack.

Step 1. Peel away the plastic and apply left latch cover to front latch of left rail.

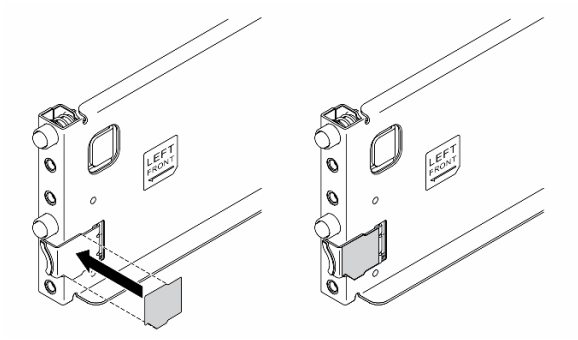

Figure 111. Applying left latch cover

Step 2. Peel away the plastic and apply one rail cover strip to bottom surface of left rail.

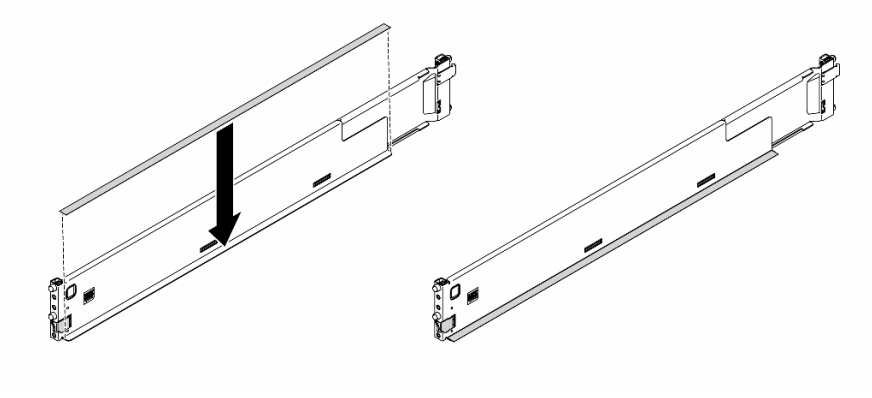

Figure 112. Applying left rail cover strip

Step 3. Repeat the previous two steps on the right rail.

Cable the server

Attach all external cables to the server. Typically, you will need to connect the server to a power source, to the data network, and to storage. In addition, you will need to connect the server to the management network.

Connect to power

Connect the server to power.

Connect to the network

Connect the server to the network.

Connect to storage

Connect the server to any storage devices.

Power on the server

After the server performs a short self-test (power status LED flashes quickly) when connected to input power, it enters a standby state (power status LED flashes once per second).

The server can be turned on (power LED on) in any of the following ways:

- You can press the power button.
- The server can restart automatically after a power interruption.
- The server can respond to remote power-on requests sent to the Lenovo XClarity Controller.

For information about powering off the server, see "Power off the server" on page 158.

Validate server setup

After powering up the server, make sure that the LEDs are lit and that they are green.

Power off the server

The server remains in a standby state when it is connected to a power source, allowing the Lenovo XClarity Controller to respond to remote power-on requests. To remove all power from the server (power-on LED off), you must disconnect all power cables.

To place the server in a standby state (power-on LED flashes once per second):

Note: The Lenovo XClarity Controller can place the server in a standby state as an automatic response to a critical system failure.

- Start an orderly shutdown using the operating system (if supported by your operating system).
- Press the power-on button to start an orderly shutdown (if supported by your operating system).
- Press and hold the power button for more than 4 seconds to force a shutdown.

Attention: When the server in standby, Fan 4 would spin at 10% duty.

When in a standby state, the server can respond to remote power-on requests sent to the Lenovo XClarity Controller. For information about powering on the server, see "Power on the server" on page 158.

Chapter 5. System configuration

Complete these procedures to configure your system.

Set the network connection for the Lenovo XClarity Controller

Before you can access the Lenovo XClarity Controller over your network, you need to specify how Lenovo XClarity Controller will connect to the network. Depending on how the network connection is implemented, you might need to specify a static IP address as well.

The following methods are available to set the network connection for the Lenovo XClarity Controller if you are not using DHCP:

- If a monitor is attached to the server, you can use Lenovo XClarity Provisioning Manager to set the network connection.

  Complete the following steps to connect the Lenovo XClarity Controller to the network using the Lenovo XClarity Provisioning Manager.

  1. Start the server.
  2. Press the key specified in the on-screen instructions to display the Lenovo XClarity Provisioning Manager interface. (For more information, see the “Startup” section in the LXPM documentation compatible with your server at https://pubs.lenovo.com/lxpm-overview/.)
  3. Go to **LXPM → UEFI Setup → BMC Settings** to specify how the Lenovo XClarity Controller will connect to the network.
     - If you choose a static IP connection, make sure that you specify an IPv4 or IPv6 address that is available on the network.
     - If you choose a DHCP connection, make sure that the MAC address for the server has been configured in the DHCP server.
  4. Click **OK** to apply the setting and wait for two to three minutes.
  5. Use an IPv4 or IPv6 address to connect Lenovo XClarity Controller.

     Important: The Lenovo XClarity Controller is set initially with a user name of USERID and password of PASSW0RD (with a zero, not the letter O). This default user setting has Supervisor access. It is required to change this user name and password during your initial configuration for enhanced security.
- If no monitor attached to the server, you can set the network connection through the Lenovo XClarity Controller interface. Connect an Ethernet cable from your laptop to Lenovo XClarity Controller connector, which is located at the rear of the server. For the location of the Lenovo XClarity Controller connector, see “Rear view” on page 24.

  Note: Make sure that you modify the IP settings on the laptop so that it is on the same network as the server default settings.

  The default IPv4 address and the IPv6 Link Local Address (LLA) is provided on the Lenovo XClarity Controller Network Access label that is affixed to the Pull Out Information Tab.
- If you are using the Lenovo XClarity Administrator Mobile app from a mobile device, you can connect to the Lenovo XClarity Controller through the Lenovo XClarity Controller USB connector on the front of the server. For the location of the Lenovo XClarity Controller USB connector, see “Front view” on page 16.

  Note: The Lenovo XClarity Controller USB connector mode must be set to manage the Lenovo XClarity Controller (instead of normal USB mode). To switch from normal mode to Lenovo XClarity Controller

© Copyright Lenovo 2020, 2025

management mode, hold the blue ID button on the front panel for at least 3 seconds until its LED flashes slowly (once every couple of seconds).

To connect using the Lenovo XClarity Administrator Mobile app:

1. Connect the USB cable of your mobile device to the Lenovo XClarity Administrator USB connector on the front panel.
2. On your mobile device, enable USB tethering.
3. On your mobile device, launch the Lenovo XClarity Administrator mobile app.
4. If automatic discovery is disabled, click **Discovery** on the USB Discovery page to connect to the Lenovo XClarity Controller.

For more information about using the Lenovo XClarity Administrator Mobile app, see:

http://sysmgt.lenovofiles.com/help/topic/com.lenovo.lxca.doc/lxca_usemobileapp.html

Set front USB port for Lenovo XClarity Controller connection

Before you can access the Lenovo XClarity Controller through the front USB port, you need to configure the USB port for Lenovo XClarity Controller connection.

Server support

To see if your server supports accessing Lenovo XClarity Controller through the front USB port, check one of the following:

- Refer to Chapter 2 “Server components” on page 15.
- If there is a wrench icon on the USB port of your server, you can set the USB port to connect to Lenovo XClarity Controller.

Setting the USB port for Lenovo XClarity Controller connection

You can switch the USB port between normal and Lenovo XClarity Controller management operation by performing one of the following steps.

- Hold the ID button for at least 3 second until its LED flashes slowly (once every couple of seconds). See Chapter 2 “Server components” on page 15 for ID button location.
- From the Lenovo XClarity Controller management controller CLI, run the `usbfp` command. For information about using the Lenovo XClarity Controller CLI, see the “Command-line interface” section in the XCC documentation compatible with your server at https://pubs.lenovo.com/lxcc-overview/.
- From the Lenovo XClarity Controller management controller web interface, click **BMC Configuration → Network → Front Panel USB Port Manager**. For information about Lenovo XClarity Controller web interface functions, see the “Description of XClarity Controller functions on web interface” section in the XCC documentation compatible with your server at https://pubs.lenovo.com/lxcc-overview/.

Checking USB port current setting

You can also check the current setting of the USB port using the Lenovo XClarity Controller management controller CLI (`usbfp` command) or the Lenovo XClarity Controller management controller web interface (**BMC Configuration → Network → Front Panel USB Port Manager**). See the “Command-line interface” and “Description of XClarity Controller functions on web interface” sections in the XCC documentation compatible with your server at https://pubs.lenovo.com/lxcc-overview/.

Update the firmware

Several options are available to update the firmware for the server.

You can use the tools listed here to update the most current firmware for your server and the devices that are installed in the server.

- Best practices related to updating firmware is available at the following site:
  - http://lenovopress.com/LP0656
- The latest firmware can be found at the following site:
  - http://datacentersupport.lenovo.com/products/servers/thinksystem/st650v2/7Z74/downloads
- You can subscribe to product notification to stay up to date on firmware updates:
  - https://datacentersupport.lenovo.com/tw/en/solutions/ht509500

UpdateXpress System Packs (UXSPs)

Lenovo typically releases firmware in bundles called UpdateXpress System Packs (UXSPs). To ensure that all of the firmware updates are compatible, you should update all firmware at the same time. If you are updating firmware for both the Lenovo XClarity Controller and UEFI, update the firmware for Lenovo XClarity Controller first.

Update method terminology

- **In-band update**. The installation or update is performed using a tool or application within an operating system that is executing on the server's core CPU.
- **Out-of-band update**. The installation or update is performed by the Lenovo XClarity Controller collecting the update and then directing the update to the target subsystem or device. Out-of-band updates have no dependency on an operating system executing on the core CPU. However, most out-of-band operations do require the server to be in the S0 (Working) power state.
- **On-Target update.** The installation or update is initiated from an installed operating system executing on the target server itself.
- **Off-Target update.** The installation or update is initiated from a computing device interacting directly with the server's Lenovo XClarity Controller.
- **UpdateXpress System Packs (UXSPs)**. UXSPs are bundled updates designed and tested to provide the interdependent level of functionality, performance, and compatibility. UXSPs are server machine-type specific and are built (with firmware and device driver updates) to support specific Windows Server, Red Hat Enterprise Linux (RHEL) and SUSE Linux Enterprise Server (SLES) operating system distributions. Machine-type-specific firmware-only UXSPs are also available.

Firmware updating tools

See the following table to determine the best Lenovo tool to use for installing and setting up the firmware:

Tool	Update Methods Supported	Core System Firmware Updates	I/O Devices Firmware Updates	Graphical user interface	Command line interface	Supports UXSPs
Lenovo XClarity Provisioning Manager (LXPM)	In-band[2] On-Target	√		√		
Lenovo XClarity Controller (XCC)	Out-of-band Off-Target	√	Selected I/O devices	√		
Lenovo XClarity Essentials OneCLI (OneCLI)	In-band Out-of-band On-Target Off-Target	√	All I/O devices		√	√
Lenovo XClarity Essentials UpdateXpress (LXCE)	In-band Out-of-band On-Target Off-Target	√	All I/O devices	√		√
Lenovo XClarity Essentials Bootable Media Creator (BoMC)	In-band Out-of-band Off-Target	√	All I/O devices	√ (BoMC application)	√ (BoMC application)	√
Lenovo XClarity Administrator (LXCA)	In-band[1] Out-of-band[2] Off-Target	√	All I/O devices	√		√
Lenovo XClarity Integrator (LXCI) for VMware vCenter	Out-of-band Off-Target	√	Selected I/O devices	√		
Lenovo XClarity Integrator (LXCI) for Microsoft Windows Admin Center	In-band Out-of-band On-Target Off-Target	√	All I/O devices	√		√
Lenovo XClarity Integrator (LXCI) for Microsoft System Center Configuration Manager	In-band On-Target	√	All I/O devices	√		√

Notes:

1. For I/O firmware updates.
2. For BMC and UEFI firmware updates.

- **Lenovo XClarity Provisioning Manager**

  From Lenovo XClarity Provisioning Manager, you can update the Lenovo XClarity Controller firmware, the UEFI firmware, and the Lenovo XClarity Provisioning Manager software.

  Note: By default, the Lenovo XClarity Provisioning Manager Graphical User Interface is displayed when you start the server and press the key specified in the on-screen instructions. If you have changed that default to be the text-based system setup, you can bring up the Graphical User Interface from the text-based system setup interface.

  For additional information about using Lenovo XClarity Provisioning Manager to update firmware, see:

  "Firmware Update" section in the LXPM documentation compatible with your server at https://pubs.lenovo.com/lxpm-overview/

- **Lenovo XClarity Controller**

  If you need to install a specific update, you can use the Lenovo XClarity Controller interface for a specific server.

  Notes:

  – To perform an in-band update through Windows or Linux, the operating system driver must be installed and the Ethernet-over-USB (sometimes called LAN over USB) interface must be enabled.

    For additional information about configuring Ethernet over USB, see:

    "Configuring Ethernet over USB" section in the XCC documentation version compatible with your server at https://pubs.lenovo.com/lxcc-overview/

  – If you update firmware through the Lenovo XClarity Controller, make sure that you have downloaded and installed the latest device drivers for the operating system that is running on the server.

  For additional information about using Lenovo XClarity Controller to update firmware, see:

  "Updating Server Firmware" section in the XCC documentation compatible with your server at https://pubs.lenovo.com/lxcc-overview/

- **Lenovo XClarity Essentials OneCLI**

  Lenovo XClarity Essentials OneCLI is a collection of command line applications that can be used to manage Lenovo servers. Its update application can be used to update firmware and device drivers for your servers. The update can be performed within the host operating system of the server (in-band) or remotely through the BMC of the server (out-of-band).

  For additional information about using Lenovo XClarity Essentials OneCLI to update firmware, see:

  https://pubs.lenovo.com/lxce-onecli/onecli_c_update

- **Lenovo XClarity Essentials UpdateXpress**

  Lenovo XClarity Essentials UpdateXpress provides most of OneCLI update functions through a graphical user interface (GUI). It can be used to acquire and deploy UpdateXpress System Pack (UXSP) update packages and individual updates. UpdateXpress System Packs contain firmware and device driver updates for Microsoft Windows and for Linux.

  You can obtain Lenovo XClarity Essentials UpdateXpress from the following location:

  https://datacentersupport.lenovo.com/solutions/lnvo-xpress

- **Lenovo XClarity Essentials Bootable Media Creator**

  You can use Lenovo XClarity Essentials Bootable Media Creator to create bootable media that is suitable for firmware updates, VPD updates, inventory and FFDC collection, advanced system configuration, FoD Keys management, secure erase, RAID configuration, and diagnostics on supported servers.

You can obtain Lenovo XClarity Essentials BoMC from the following location:

https://datacentersupport.lenovo.com/solutions/lnvo-bomc

- **Lenovo XClarity Administrator**

  If you are managing multiple servers using the Lenovo XClarity Administrator, you can update firmware for all managed servers through that interface. Firmware management is simplified by assigning firmware-compliance policies to managed endpoints. When you create and assign a compliance policy to managed endpoints, Lenovo XClarity Administrator monitors changes to the inventory for those endpoints and flags any endpoints that are out of compliance.

  For additional information about using Lenovo XClarity Administrator to update firmware, see:

  http://sysmgt.lenovofiles.com/help/topic/com.lenovo.lxca.doc/update_fw.html

- **Lenovo XClarity Integrator offerings**

  Lenovo XClarity Integrator offerings can integrate management features of Lenovo XClarity Administrator and your server with software used in a certain deployment infrastructure, such as VMware vCenter, Microsoft Admin Center, or Microsoft System Center.

  For additional information about using Lenovo XClarity Integrator to update firmware, see:

  https://pubs.lenovo.com/lxci-overview/

Configure the firmware

Several options are available to install and set up the firmware for the server.

Important: Do not configure option ROMs to be set to **Legacy** unless directed to do so by Lenovo Support. This setting prevents UEFI drivers for the slot devices from loading, which can cause negative side effects for Lenovo software, such as Lenovo XClarity Administrator and Lenovo XClarity Essentials OneCLI, and to the Lenovo XClarity Controller. The side effects include the inability to determine adapter card details, such as model name and firmware levels. When adapter card information is not available, generic information for the model name, such as "Adapter 06:00:00" instead of the actually model name, such as "ThinkSystem RAID 930-16i 4GB Flash." In some cases, the UEFI boot process might also hang.

- **Lenovo XClarity Provisioning Manager**

  From Lenovo XClarity Provisioning Manager, you can configure the UEFI settings for your server.

  Notes: The Lenovo XClarity Provisioning Manager provides a Graphical User Interface to configure a server. The text-based interface to system configuration (the Setup Utility) is also available. From Lenovo XClarity Provisioning Manager, you can choose to restart the server and access the text-based interface. In addition, you can choose to make the text-based interface the default interface that is displayed when you start LXPM. To do this, go to **Lenovo XClarity Provisioning Manager → UEFI Setup → System Settings → <F1>Start Control → Text Setup**. To start the server with Graphic User Interface, select **Auto** or **Tool Suite**.

  See the following documentations for more information:

  - *Lenovo XClarity Provisioning Manager User Guide*
    - Search for the LXPM documentation version compatible with your server at https://pubs.lenovo.com/lxpm-overview/
  - *UEFI User Guide*
    - https://pubs.lenovo.com/uefi-overview/

- **Lenovo XClarity Essentials OneCLI**

You can use the config application and commands to view the current system configuration settings and make changes to Lenovo XClarity Controller and UEFI. The saved configuration information can be used to replicate or restore other systems.

For information about configuring the server using Lenovo XClarity Essentials OneCLI, see:

https://pubs.lenovo.com/lxce-onecli/onecli_c_settings_info_commands

- **Lenovo XClarity Administrator**

  You can quickly provision and pre-provision all of your servers using a consistent configuration. Configuration settings (such as local storage, I/O adapters, boot settings, firmware, ports, and Lenovo XClarity Controller and UEFI settings) are saved as a server pattern that can be applied to one or more managed servers. When the server patterns are updated, the changes are automatically deployed to the applied servers.

  Specific details about updating firmware using Lenovo XClarity Administrator are available at:

  http://sysmgt.lenovofiles.com/help/topic/com.lenovo.lxca.doc/server_configuring.html

- **Lenovo XClarity Controller**

  You can configure the management processor for the server through the Lenovo XClarity Controller Web interface or through the command-line interface.

  For information about configuring the server using Lenovo XClarity Controller, see:

  "Configuring the Server" section in the XCC documentation compatible with your server at https://pubs.lenovo.com/lxcc-overview/

Memory configuration

Memory performance depends on several variables, such as memory mode, memory speed, memory ranks, memory population and processor.

More information about optimizing memory performance and configuring memory is available at the Lenovo Press website:

https://lenovopress.com/servers/options/memory

In addition, you can take advantage of a memory configurator, which is available at the following site:

https://dcsc.lenovo.com/#/memory_configuration

For specific information about the required installation order of memory modules in your server based on the system configuration and memory mode that you are implementing, see "Technical rules for memory modules" on page 65.

Enable Software Guard Extensions (SGX)

Intel® Software Guard Extensions (Intel® SGX) operates under the assumption that the security perimeter includes only the internals of the CPU package, and leaves the DRAM untrusted.

Complete the following steps to enable SGX.

Note: Make sure you follow the memory module population sequence for SGX configurations in "Independent memory mode" on page 66.

Step 1. Make sure you follow the memory module population sequence for SGX configurations in "Independent memory mode" on page 66. (DIMM configuration must be at least 8 DIMMs per socket to support SGX).

Step 2. Restart the system. Before the operating system starts up, press the key specified in the on-screen instructions to enter the Setup Utility. (For more information, see the "Startup" section in the LXPM documentation compatible with your server at https://pubs.lenovo.com/lxpm-overview/.)

Step 3. Go to **System settings → Processors → UMA-Based Clustering** and disable the option.

Step 4. Go to **System settings → Processors → Total Memory Encryption (TME)** and enable the option.

Step 5. Save the changes, then go to **System settings → Processors → SW Guard Extension (SGX)** and enable the option.

Note: For more information, see (sgx_ug_v2).

RAID configuration

Using a Redundant Array of Independent Disks (RAID) to store data remains one of the most common and cost-efficient methods to increase server's storage performance, availability, and capacity.

RAID increases performance by allowing multiple drives to process I/O requests simultaneously. RAID can also prevent data loss in case of a drive failure by reconstructing (or rebuilding) the missing data from the failed drive using the data from the remaining drives.

RAID array (also known as RAID drive group) is a group of multiple physical drives that uses a certain common method to distribute data across the drives. A virtual drive (also known as virtual disk or logical drive) is a partition in the drive group that is made up of contiguous data segments on the drives. Virtual drive is presented up to the host operating system as a physical disk that can be partitioned to create OS logical drives or volumes.

An introduction to RAID is available at the following Lenovo Press website:

https://lenovopress.com/lp0578-lenovo-raid-introduction

Detailed information about RAID management tools and resources is available at the following Lenovo Press website:

https://lenovopress.com/lp0579-lenovo-raid-management-tools-and-resources

Notes:

- Before setting up RAID for NVMe drives, follow the below steps to enable VROC:
  1. Restart the system. Before the operating system starts up, press **F1** to enter the Setup Utility.
  2. Go to **System settings → Devices and I/O Ports → Intel VMD** and enable the option.
  3. Save the changes and reboot the system.
- VROC Intel-SSD-Only supports RAID levels 0, 1, 5, and 10 with Intel NVMe drives.
- VROC Premium requires an activation key and supports RAID levels 0, 1, 5, and 10 with non-Intel NVMe drives. For more information about acquiring and installing the activation key, see https://fod.lenovo.com/lkms

Deploy the operating system

Several options are available to deploy an operating system on the server.

Available operating systems

- Microsoft Windows Server
- VMware ESXi
- Red Hat Enterprise Linux
- SUSE Linux Enterprise Server

Complete list of available operating systems: https://lenovopress.lenovo.com/osig.

Tool-based deployment

- **Multi-server**

  Available tools:

  – Lenovo XClarity Administrator

    http://sysmgt.lenovofiles.com/help/topic/com.lenovo.lxca.doc/compute_node_image_deployment.html

  – Lenovo XClarity Essentials OneCLI

    https://pubs.lenovo.com/lxce-onecli/onecli_r_uxspi_proxy_tool

  – Lenovo XClarity Integrator deployment pack for SCCM (for Windows operating system only)

    https://pubs.lenovo.com/lxci-deploypack-sccm/dpsccm_c_endtoend_deploy_scenario

- **Single-server**

  Available tools:

  – Lenovo XClarity Provisioning Manager

    "OS Installation" section in the LXPM documentation compatible with your server at https://pubs.lenovo.com/lxpm-overview/

  – Lenovo XClarity Essentials OneCLI

    https://pubs.lenovo.com/lxce-onecli/onecli_r_uxspi_proxy_tool

  – Lenovo XClarity Integrator deployment pack for SCCM (for Windows operating system only)

    https://pubs.lenovo.com/lxci-deploypack-sccm/dpsccm_c_endtoend_deploy_scenario

Manual deployment

If you cannot access the above tools, follow the instructions below, download the corresponding *OS Installation Guide*, and deploy the operating system manually by referring to the guide.

1. Go to https://datacentersupport.lenovo.com/solutions/server-os.
2. Select an operating system from the navigation pane and click **Resources**.
3. Locate the "OS Install Guides" area and click the installation instructions. Then, follow the instructions to complete the operation system deployment task.

Back up the server configuration

After setting up the server or making changes to the configuration, it is a good practice to make a complete backup of the server configuration.

Make sure that you create backups for the following server components:

- **Management processor**

  You can back up the management processor configuration through the Lenovo XClarity Controller interface. For details about backing up the management processor configuration, see:

"Backing up the BMC configuration" section in the XCC documentation compatible with your server at https://pubs.lenovo.com/lxcc-overview/.

Alternatively, you can use the `save` command from Lenovo XClarity Essentials OneCLI to create a backup of all configuration settings. For more information about the `save` command, see:

https://pubs.lenovo.com/lxce-onecli/onecli_r_save_command

- **Operating system**

  Use your backup methods to back up the operating system and user data for the server.

Update the Vital Product Data (VPD)

After initial setup of the system, you can update some Vital Product Data (VPD), such as asset tag and Universal Unique Identifier (UUID).

Update the Universal Unique Identifier (UUID)

Optionally, you can update the Universal Unique Identifier (UUID).

There are two methods available to update the UUID:

- From Lenovo XClarity Provisioning Manager

  To update the UUID from Lenovo XClarity Provisioning Manager:

  1. Start the server and press the key according to the on-screen instructions. (For more information, see the "Startup" section in the LXPM documentation compatible with your server at https://pubs.lenovo.com/lxpm-overview/.) The Lenovo XClarity Provisioning Manager interface is displayed by default.
  2. If the power-on Administrator password is required, enter the password.
  3. From the System Summary page, click **Update VPD**.
  4. Update the UUID.

- From Lenovo XClarity Essentials OneCLI

  Lenovo XClarity Essentials OneCLI sets the UUID in the Lenovo XClarity Controller. Select one of the following methods to access the Lenovo XClarity Controller and set the UUID:

  – Operate from the target system, such as LAN or keyboard console style (KCS) access
  – Remote access to the target system (TCP/IP based)

  To update the UUID from Lenovo XClarity Essentials OneCLI:

  1. Download and install Lenovo XClarity Essentials OneCLI.

     To download Lenovo XClarity Essentials OneCLI, go to the following site:

     https://datacentersupport.lenovo.com/solutions/HT116433

  2. Copy and unpack the OneCLI package, which also includes other required files, to the server. Make sure that you unpack the OneCLI and the required files to the same directory.
  3. After you have Lenovo XClarity Essentials OneCLI in place, type the following command to set the UUID:
     ```
     onecli config createuuid SYSTEM_PROD_DATA.SysInfoUUID [access_method]
     ```

     Where:

     [access_method]
     The access method that you select to use from the following methods:

– Online authenticated LAN access, type the command:
```
[--bmc-username <xcc_user_id> --bmc-password <xcc_password>]
```

Where:

xcc_user_id
The BMC/IMM/XCC account name (1 of 12 accounts). The default value is USERID.

xcc_password
The BMC/IMM/XCC account password (1 of 12 accounts).

Example command is as follows:
```
onecli config createuuid SYSTEM_PROD_DATA.SysInfoUUID --bmc-username <xcc_user_id> --bmc-
password <xcc_password>
```

– Online KCS access (unauthenticated and user restricted):

You do not need to specify a value for *access_method* when you use this access method.

Example command is as follows:
```
onecli config createuuid SYSTEM_PROD_DATA.SysInfoUUID
```

Note: The KCS access method uses the IPMI/KCS interface, which requires that the IPMI driver be installed.

– Remote LAN access, type the command:
```
[--bmc <xcc_user_id>:<xcc_password>@<xcc_external_ip>]
```

Where:

xcc_external_ip
The BMC/IMM/XCC external IP address. There is no default value. This parameter is required.

xcc_user_id
The BMC/IMM/XCC account name (1 of 12 accounts). The default value is USERID.

xcc_password
The BMC/IMM/XCC account password (1 of 12 accounts).

Note: BMC, IMM, or XCC external IP address, account name, and password are all valid for this command.

Example command is as follows:
```
onecli config createuuid SYSTEM_PROD_DATA.SysInfoUUID --bmc <xcc_user_id>:<xcc_password>@<xcc_
external_ip>
```

4. Restart the Lenovo XClarity Controller.
5. Restart the server.

Update the asset tag

Optionally, you can update the asset tag.

There are two methods available to update the asset tag:

- From Lenovo XClarity Provisioning Manager

  To update the asset tag from Lenovo XClarity Provisioning Manager:

  1. Start the server and press the key specified in the on-screen instructions to display the Lenovo XClarity Provisioning Manager interface.
  2. If the power-on Administrator password is required, enter the password.

3. From the System Summary page, click **Update VPD**.
4. Update the asset tag information.

- From Lenovo XClarity Essentials OneCLI

  Lenovo XClarity Essentials OneCLI sets the asset tag in the Lenovo XClarity Controller. Select one of the following methods to access the Lenovo XClarity Controller and set the asset tag:

  – Operate from the target system, such as LAN or keyboard console style (KCS) access
  – Remote access to the target system (TCP/IP based)

  To update the asset tag from Lenovo XClarity Essentials OneCLI:

  1. Download and install Lenovo XClarity Essentials OneCLI.

     To download Lenovo XClarity Essentials OneCLI, go to the following site:

     https://datacentersupport.lenovo.com/solutions/HT116433

  2. Copy and unpack the OneCLI package, which also includes other required files, to the server. Make sure that you unpack the OneCLI and the required files to the same directory.
  3. After you have Lenovo XClarity Essentials OneCLI in place, type the following command to set the DMI:
     ```
     onecli config set SYSTEM_PROD_DATA.SysEncloseAssetTag <asset_tag> [access_method]
     ```

     Where:

     <asset_tag>
     The server asset tag number. Type `aaaaaaaaaaaaaaaaaaaaaaaaaaaaaaaa`, where *aaaaaaaaaaaaaaaaaaaaaaaaaaaaaaaa* is the asset tag number.

     [access_method]
     The access method that you select to use from the following methods:

     – Online authenticated LAN access, type the command:
       ```
       [--bmc-username <xcc_user_id> --bmc-password <xcc_password>]
       ```

       Where:

       xcc_user_id
       The BMC/IMM/XCC account name (1 of 12 accounts). The default value is USERID.

       xcc_password
       The BMC/IMM/XCC account password (1 of 12 accounts).

       Example command is as follows:

       ```
       onecli config set SYSTEM_PROD_DATA.SysEncloseAssetTag <asset_tag> --bmc-username <xcc_user_id>
       --bmc-password <xcc_password>
       ```

     – Online KCS access (unauthenticated and user restricted):

       You do not need to specify a value for *access_method* when you use this access method.

       Example command is as follows:

       ```
       onecli config set SYSTEM_PROD_DATA.SysEncloseAssetTag <asset_tag>
       ```

       Note: The KCS access method uses the IPMI/KCS interface, which requires that the IPMI driver be installed.

     – Remote LAN access, type the command:

```
[--bmc <xcc_user_id>:<xcc_password>@<xcc_external_ip>]
```

Where:

xcc_external_ip
The BMC/IMM/XCC IP address. There is no default value. This parameter is required.

xcc_user_id
The BMC/IMM/XCC account (1 of 12 accounts). The default value is USERID.

xcc_password
The BMC/IMM/XCC account password (1 of 12 accounts).

Note: BMC, IMM, or XCC internal LAN/USB IP address, account name, and password are all valid for this command.

Example command is as follows:

```
onecli config set SYSTEM_PROD_DATA.SysEncloseAssetTag <asset_tag> --bmc <xcc_user_id>:<xcc_
password>@<xcc_external_ip>
```

4. Reset the Lenovo XClarity Controller to the factory defaults. See “Resetting the BMC to Factory Default” section in the XCC documentation compatible with your server at https://pubs.lenovo.com/lxcc-overview/.

Chapter 6. Resolving installation issues

Follow this procedure to resolve issues that you might have when setting up your system.

Use the information in this section to diagnose and resolve problems that you might encounter during the initial installation and setup of your server.

- “Server does not power on” on page 173
- “The server immediately displays the POST Event Viewer when it is turned on” on page 173
- “Embedded hypervisor is not in the boot list” on page 173
- “Server cannot recognize a hard drive” on page 174
- “Displayed system memory is less than installed physical memory” on page 175
- “A Lenovo optional device that was just installed does not work.” on page 176
- “Voltage planar fault is displayed in the event log” on page 176

Server does not power on

Complete the following steps until the problem is resolved:

1. Check the event log for any events related to the server not powering on.
2. Check for any LEDs that are flashing amber.
3. Check the power LED on the system board.
4. Reseat the power supply.
5. Replace the power supply.

The server immediately displays the POST Event Viewer when it is turned on

Complete the following steps until the problem is solved.

1. Correct any errors that are indicated by the light path diagnostics LEDs.
2. Make sure that the server supports all the processors and that the processors match in speed and cache size.

   You can view processor details from system setup.

   To determine if the processor is supported for the server, see https://serverproven.lenovo.com/.
3. (Trained technician only) Make sure that processor 1 is seated correctly
4. (Trained technician only) Remove processor 2 and restart the server.
5. Replace the following components one at a time, in the order shown, restarting the server each time:
   a. (Trained technician only) Processor
   b. (Trained technician only) System board

Embedded hypervisor is not in the boot list

Complete the following steps until the problem is solved.

1. If the server has been installed, moved, or serviced recently, or if this is the first time the embedded hypervisor is being used, make sure that the device is connected properly and that there is no physical damage to the connectors.
2. See the documentation that comes with the optional embedded hypervisor flash device for setup and configuration information.

© Copyright Lenovo 2020, 2025

3. Check https://serverproven.lenovo.com/ to validate that the embedded hypervisor device is supported for the server.
4. Make sure that the embedded hypervisor device is listed in the list of available boot options. From the management controller user interface, click **Server Configuration → Boot Options**.

   For information about accessing the management controller user interface, see "Opening and Using the XClarity Controller Web Interface" section in the XCC documentation compatible with your server at:

   https://pubs.lenovo.com/lxcc-overview/
5. Check http://datacentersupport.lenovo.com for any tech tips (service bulletins) related to the embedded hypervisor and the server.
6. Make sure that other software works on the server to ensure that it is working properly.

Server cannot recognize a hard drive

Complete the following steps until the problem is solved.

1. Observe the associated yellow hard disk drive status LED. If the LED is lit, it indicates a drive fault.
2. If the status LED is lit, remove the drive from the bay, wait 45 seconds, and reinsert the drive, making sure that the drive assembly connects to the hard disk drive backplane.
3. Observe the associated green hard disk drive activity LED and the yellow status LED and perform corresponding operations in different situations:
   - If the green activity LED is flashing and the yellow status LED is not lit, the drive is recognized by the controller and is working correctly. Run the diagnostics tests for the hard disk drives. When you start a server and press the key according to the on-screen instructions, the LXPM is displayed by default. (For more information, see the "Startup" section in the LXPM documentation compatible with your server at https://pubs.lenovo.com/lxpm-overview/.)You can perform hard drive diagnostics from this interface. From the Diagnostic page, click **Run Diagnostic → HDD test/Disk Drive Test**.*
   - If the green activity LED is flashing and the yellow status LED is flashing slowly, the drive is recognized by the controller and is rebuilding.
   - If neither LED is lit or flashing, check whether the hard disk drive backplane is correctly seated. For details, go to step 4.
   - If the green activity LED is flashing and the yellow status LED is lit, replace the drive. If the activity of the LEDs remains the same, go to step Hard disk drive problems. If the activity of the LEDs changes, return to step 1.
4. Make sure that the hard disk drive backplane is correctly seated. When it is correctly seated, the drive assemblies correctly connect to the backplane without bowing or causing movement of the backplane.
5. Reseat the backplane power cable and repeat steps 1 through 3.
6. Reseat the backplane signal cable and repeat steps 1 through 3.
7. Suspect the backplane signal cable or the backplane:
   - Replace the affected backplane signal cable.
   - Replace the affected backplane.
8. Run the diagnostics tests for the hard disk drives. When you start a server and press the key according to the on-screen instructions, the LXPM is displayed by default. (For more information, see the "Startup" section in the LXPM documentation compatible with your server at https://pubs.lenovo.com/lxpm-overview/.) You can perform hard drive diagnostics from this interface. From the Diagnostic page, click **Run Diagnostic → HDD test/Disk Drive Test**.*

   Based on those tests:
   - If the backplane passes the test but the drives are not recognized, replace the backplane signal cable and run the tests again.

- Replace the backplane.
- If the adapter fails the test, disconnect the backplane signal cable from the adapter and run the tests again.
- If the adapter fails the test, replace the adapter.

Displayed system memory is less than installed physical memory

Complete the following procedure to solve the problem.

Note: Each time you install or remove a memory module, you must disconnect the server from the power source; then, wait 10 seconds before restarting the server.

1. Make sure that:
   - No error LEDs are lit on the operator information panel.
   - No memory module error LEDs are lit on the system board.
   - Memory mirrored channel does not account for the discrepancy.
   - The memory modules are seated correctly.
   - You have installed the correct type of memory module (see "PMEM rules" on page 71 for requirements).
   - After changing or replacing a memory module, memory configuration is updated accordingly in the Setup Utility.
   - All banks of memory are enabled. The server might have automatically disabled a memory bank when it detected a problem, or a memory bank might have been manually disabled.
   - There is no memory mismatch when the server is at the minimum memory configuration.
   - When PMEMs are installed:
     a. If the memory is set in App Direct Mode, all the saved data have been backed up, and created namespaces are deleted before any PMEM is replaced or added.
     b. Refer to "PMEM rules" on page 71 and see if the displayed memory fits the mode description.
     c. If PMEMs are recently set in Memory Mode, turn it back to App Direct Mode and examine if there is namespace that has not been deleted.
     d. Go to the Setup Utility, select **System Configuration and Boot Management → Intel Optane PMEMs → Security**, and make sure security of all the PMEM units is disabled.
2. Reseat the memory modules, and then restart the server.
3. Check the POST error log:
   - If a memory module was disabled by a systems-management interrupt (SMI), replace the memory module.
   - If a memory module was disabled by the user or by POST, reseat the memory module; then, run the Setup utility and enable the memory module.
4. Run memory diagnostics. When you start a solution and press the key specified in the on-screen instructions, the LXPM interface is displayed by default. You can perform memory diagnostics with this interface. From the Diagnostic page, go to **Run Diagnostic → Memory test** or **PMEM test**.

   Notes: When PMEMs are installed, run diagnostics based on the mode that is set presently:
   - App Direct Mode:
     – Run Memory Test for DRAM memory modules.
     – Run PMEM Test for PMEMs.
   - Memory Mode:

Run both Memory Test and PMEM Test for PMEMs.

5. Reverse the modules between the channels (of the same processor), and then restart the server. If the problem is related to a memory module, replace the failing memory module.

   Note: When PMEMs are installed, only adopt this method in Memory Mode.

6. Re-enable all memory modules using the Setup utility, and then restart the server.
7. (Trained technician only) Install the failing memory module into a memory module connector for processor 2 (if installed) to verify that the problem is not the processor or the memory module connector.
8. (Trained technician only) Replace the system board.

A Lenovo optional device that was just installed does not work.

1. Make sure that:
   - The device is supported for the server (see https://serverproven.lenovo.com/).
   - You followed the installation instructions that came with the device and the device is installed correctly.
   - You have not loosened any other installed devices or cables.
   - You updated the configuration information in system setup. When you start a server and press the key according to the on-screen instructions to display the Setup Utility. (For more information, see the "Startup" section in the LXPM documentation compatible with your server at https://pubs.lenovo.com/lxpm-overview/.) Whenever memory or any other device is changed, you must update the configuration.
2. Reseat the device that you have just installed.
3. Replace the device that you have just installed.
4. Reseat the cable connection and check there is no physical damage to the cable.
5. If there is any cable damages, then replace the cable.

Voltage planar fault is displayed in the event log

Complete the following steps until the problem is solved.

1. Revert the system to the minimum configuration. See "Specifications" on page 3 for the minimally required number of processors and DIMMs.
2. Restart the system.
   - If the system restarts, add each of the removed items one at a time and restart the system each time until the error occurs. Replace the item for which the error occurs.
   - If the system does not restart, suspect the system board.

Appendix A. Getting help and technical assistance

If you need help, service, or technical assistance or just want more information about Lenovo products, you will find a wide variety of sources available from Lenovo to assist you.

On the World Wide Web, up-to-date information about Lenovo systems, optional devices, services, and support are available at:

http://datacentersupport.lenovo.com

Note: IBM is Lenovo's preferred service provider for ThinkSystem.

Before you call

Before you call, there are several steps that you can take to try and solve the problem yourself. If you decide that you do need to call for assistance, gather the information that will be needed by the service technician to more quickly resolve your problem.

Attempt to resolve the problem yourself

You can solve many problems without outside assistance by following the troubleshooting procedures that Lenovo provides in the online help or in the Lenovo product documentation. The Lenovo product documentation also describes the diagnostic tests that you can perform. The documentation for most systems, operating systems, and programs contains troubleshooting procedures and explanations of error messages and error codes. If you suspect a software problem, see the documentation for the operating system or program.

You can find the product documentation for your ThinkSystem products at the following location:

http://thinksystem.lenovofiles.com/help/index.jsp

You can take these steps to try to solve the problem yourself:

- Check all cables to make sure that they are connected.
- Check the power switches to make sure that the system and any optional devices are turned on.
- Check for updated software, firmware, and operating-system device drivers for your Lenovo product. The Lenovo Warranty terms and conditions state that you, the owner of the Lenovo product, are responsible for maintaining and updating all software and firmware for the product (unless it is covered by an additional maintenance contract). Your service technician will request that you upgrade your software and firmware if the problem has a documented solution within a software upgrade.
- If you have installed new hardware or software in your environment, check https://serverproven.lenovo.com/ to make sure that the hardware and software is supported by your product.
- Go to http://datacentersupport.lenovo.com and check for information to help you solve the problem.
  - Check the Lenovo forums at https://forums.lenovo.com/t5/Datacenter-Systems/ct-p/sv_eg to see if someone else has encountered a similar problem.

You can solve many problems without outside assistance by following the troubleshooting procedures that Lenovo provides in the online help or in the Lenovo product documentation. The Lenovo product documentation also describes the diagnostic tests that you can perform. The documentation for most systems, operating systems, and programs contains troubleshooting procedures and explanations of error messages and error codes. If you suspect a software problem, see the documentation for the operating system or program.

© Copyright Lenovo 2020, 2025

Gathering information needed to call Support

If you believe that you require warranty service for your Lenovo product, the service technicians will be able to assist you more efficiently if you prepare before you call. You can also see http://datacentersupport.lenovo.com/warrantylookup for more information about your product warranty.

Gather the following information to provide to the service technician. This data will help the service technician quickly provide a solution to your problem and ensure that you receive the level of service for which you might have contracted.

- Hardware and Software Maintenance agreement contract numbers, if applicable
- Machine type number (Lenovo 4-digit machine identifier)
- Model number
- Serial number
- Current system UEFI and firmware levels
- Other pertinent information such as error messages and logs

As an alternative to calling Lenovo Support, you can go to https://support.lenovo.com/servicerequest to submit an Electronic Service Request. Submitting an Electronic Service Request will start the process of determining a solution to your problem by making the pertinent information available to the service technicians. The Lenovo service technicians can start working on your solution as soon as you have completed and submitted an Electronic Service Request.

Collecting service data

To clearly identify the root cause of a server issue or at the request of Lenovo Support, you might need collect service data that can be used for further analysis. Service data includes information such as event logs and hardware inventory.

Service data can be collected through the following tools:

- **Lenovo XClarity Provisioning Manager**

  Use the Collect Service Data function of Lenovo XClarity Provisioning Manager to collect system service data. You can collect existing system log data or run a new diagnostic to collect new data.

- **Lenovo XClarity Controller**

  You can use the Lenovo XClarity Controller web interface or the CLI to collect service data for the server. The file can be saved and sent to Lenovo Support.

  - For more information about using the web interface to collect service data, see the “Downloading service data” section in the XCC documentation version compatible with your server at https://pubs.lenovo.com/lxcc-overview/.
  - For more information about using the CLI to collect service data, see the “ffdc command” section in the XCC documentation version compatible with your server at https://pubs.lenovo.com/lxcc-overview/.

- **Lenovo XClarity Administrator**

  Lenovo XClarity Administrator can be set up to collect and send diagnostic files automatically to Lenovo Support when certain serviceable events occur in Lenovo XClarity Administrator and the managed endpoints. You can choose to send diagnostic files to Lenovo Support using Call Home or to another service provider using SFTP. You can also manually collect diagnostic files, open a problem record, and send diagnostic files to the Lenovo Support Center.

  You can find more information about setting up automatic problem notification within the Lenovo XClarity Administrator at http://sysmgt.lenovofiles.com/help/topic/com.lenovo.lxca.doc/admin_setupcallhome.html.

- **Lenovo XClarity Essentials OneCLI**

  Lenovo XClarity Essentials OneCLI has inventory application to collect service data. It can run both in-band and out-of-band. When running in-band within the host operating system on the server, OneCLI can collect information about the operating system, such as the operating system event log, in addition to the hardware service data.

  To obtain service data, you can run the `getinfor` command. For more information about running the `getinfor`, see https://pubs.lenovo.com/lxce-onecli/onecli_r_getinfor_command.

Contacting Support

You can contact Support to obtain help for your issue.

You can receive hardware service through a Lenovo Authorized Service Provider. To locate a service provider authorized by Lenovo to provide warranty service, go to https://datacentersupport.lenovo.com/serviceprovider and use filter searching for different countries. For Lenovo support telephone numbers, see https://datacentersupport.lenovo.com/supportphonelist for your region support details.

Appendix B. Trademarks

LENOVO, THINKSYSTEM, Flex System, System x, NeXtScale System, and x Architecture are trademarks of Lenovo.

Intel and Intel Xeon are trademarks of Intel Corporation in the United States, other countries, or both.

Internet Explorer, Microsoft, and Windows are trademarks of the Microsoft group of companies.

Linux is a registered trademark of Linus Torvalds.

All other trademarks are the property of their respective owners.

© Copyright Lenovo 2020, 2025

Index

2.5-inch drive into a 3.5-inch drive bay
  installing 115

A

air baffle
  installing 145
  removing 91

B

back up the server configuration 167
backplane
  connectors 39–40
backplate
  connectors 41

C

cable routing
  CFF RAID adapter 53
  front panel 50
  front USB 51
  M.2 boot adapter 54
  optical drive 55
  PCIe slot 8 55
  power distribution board 56
  tape drive 57
cable the server 157
collecting service data 178
Common installation issues 173
Configuration - ThinkSystem ST650 V2 159
configure the firmware 164
connector
  drive backplane 39
  drive backplate 39
connectors
  backplanes 39–40
  backplates 41
contamination, particulate and gaseous 10
covers
  install 157
CPU
  option install 121
creating a personalized support web page 177
custom support web page 177

D

devices, static-sensitive
  handling 62
DIMM installation guideline 65
DIMM installation order
  memory mirroring 69
drive backplane connectors 39
drive backplate connectors 39

E

EIA brackets 154
expansion drive cage
  installing 103
  removing 102

F

fan
  install 133
  remove 95
fan cage
  install 132
fan cage assembly
  remove 97
features 1
flash power module
  installing 146
  removing 90
foot stands
  installing 152
form factor 1
front bezel
  installing 148
  removing 89
front panel 16, 21
front view 16

G

gaseous contamination 10
Getting help 177
GPU filler
  installing 142
guidelines
  options installation 60
  system reliability 62

H

handling static-sensitive devices 62
hardware options
  installing 83
help 177
hot-swap drive
  installing 118
hot-swap drive backplane
  installing 111–112
hot-swap power supply
  installing 83

I

ID label 1
install
  covers 157
  fan 133
  fan cage 132
  tower to rack conversion 154
install tower to rack conversion kit 154
installation
  guidelines 60
installation guideline
  DIMM 65
  memory module 65
installation guidelines 60

© Copyright Lenovo 2020, 2025

installation order
DIMM (memory mirroring) 69
memory module (memory mirroring) 69
installing
2.5-inch drive into a 3.5-inch drive bay 115
air baffle 145
expansion drive cage 103
flash power module 146
foot stands 152
front bezel 148
GPU filler 142
hot-swap drive 118
hot-swap drive backplane 111–112
hot-swap power supply 83
internal CFF adapter 119
intrusion switch 131
memory module 124
optical drive 105, 109
optical drive cage 104
PCIe adapter holder 134
server cover 150
simple-swap drive 116
simple-swap drive backplate 113
T4 filler 143
tape drive 105, 109
internal cable routing 49
internal CFF adapter
installing 119
introduction 1
intrusion switch
installing 131

L

Lenovo Capacity Planner 11
Lenovo XClarity Essentials 11
Lenovo XClarity Provisioning Manager 11

M

M.2 boot adapter
installing 126
M.2 drive
installing 129
management offerings 11
memory configuration 165
memory mirroring 69
DIMM installation order 69
memory module installation order 69
memory module installation guideline 65
memory module installation order
memory mirroring 69
memory module, install 124
microprocessor
option install 121

N

network access label 1
network activity LED 21
NVLink bridge
installing 140

O

optical drive
installing 105, 109
removing 98–99
optical drive cage
installing 104
removing 101
optical-drive bay 16
optical-drive eject/close button 16
optical-drive manual-eject hole 16
optical-drive status LED 16
option install
CPU 121
microprocessor 121
PHM 121
processor 121
processor-heat-sink module 121

P

package contents 1
particulate contamination 10
parts list 42
PCIe adapter holder
installing 134
PHM
option install 121
power button 21
power cords 47
Power distribution board 41
Power distribution board connectors 41
power off the server 158
power on the server 158
power status LED 21
processor
option install 121
processor-heat-sink module
option install 121

Q

QR code 1

R

rear view 24
rear view LED 26
remove
fan 95
fan cage assembly 97
NVLink bridge 92
removing
air baffle 91
expansion drive cage 102
flash power module 90
front bezel 89
optical drive 98–99
optical drive cage 101
security door 86
server cover 87
tape drive 98–99
retainer on M.2 boot adapter
adjusting 128

S

safety iii
safety inspection checklist iv, 61
security
integrated cable lock 38
padlock 38
security
security door lock 38
security door

removing 86
server components 15
server cover
installing 150
removing 87
server locks
locations 38
server setup 59
server setup checklist 59
service and support
before you call 177
service data 178
simple-swap drive
installing 116
simple-swap drive backplate
installing 113
static-sensitive devices
handling 62
storage-drive bay 16
support web page, custom 177
system board components 33
system board LED 35
system board switches and jumpers 36
System configuration - ThinkSystem ST650 V2 159
system error LED 21, 35
system ID button 21
system ID LED 21, 35
system power LED 35
system reliability guidelines 62

T

T4 filler
installing 143
tape drive
installing 105
removing 98–99
technical rules 63
Technical rules for PCIe slots 77
tower to rack conversion
install 154
tower to rack conversion kit 154
trademarks 181

U

update the firmware 161
updating
asset tag 169
Universal Unique Identifier (UUID) 168
Update the Vital Product Data (VPD) 168

V

validate server setup 158

W

warranty 1
working inside the server
power on 62

© Copyright Lenovo 2020, 2025

Lenovo