ThinkSystem ST50
Setup Guide

Machine Types: 7Y48 and 7Y49

Note

Before using this information and the product it supports, be sure to read and understand the safety information and the safety instructions, which are available at:
https://pubs.lenovo.com/safety_documentation/

In addition, be sure that you are familiar with the terms and conditions of the Lenovo warranty for your server, which can be found at:
http://datacentersupport.lenovo.com/warrantylookup

Twenty-Fourth Edition (December 2024)

© Copyright Lenovo 2018, 2024.

LIMITED AND RESTRICTED RIGHTS NOTICE: If data or software is delivered pursuant to a General Services Administration (GSA) contract, use, reproduction, or disclosure is subject to restrictions set forth in Contract No. GS-35F-05925.

Contents

Contents i

Chapter 1. Introduction 1
Server package contents 2
Server form factor 3
Features. 3
Specifications 4
Particulate contamination 8

Chapter 2. Server components 11
Front view 11
Front panel 11
Rear view 12
System board components 15
System board jumpers 15
Server locks 16
Dual SD card adapter module 18
RAID adapters 18
Flash power module 19
Internal cable routing. 19
Cable routing for drive bay 1-3 20
Cable routing for drive bay 4 22
Cable routing for the RAID adapter and drives 24
Cable routing for the power supply unit 27
Cable routing for the fans 29
Cable routing for the front panel. 29
Cable routing for the thermal sensor 30
Parts list. 30
Power cords 34

Chapter 3. Server hardware setup . . 35
Server setup checklist 35
Installation Guidelines 35
System reliability guidelines 37
Handling static-sensitive devices 37
DIMM installation rules 37
Install server hardware options 39
Remove the server cover 39
Remove the front bezel 41
Install a DIMM 42
Install a simple-swap drive (bay 1-3) 43
Install an optical drive or a tape drive. 47
Install a 5.25-inch drive bay adapter assembly 50
Install a PCIe adapter 54
Install the flash power module 55
Install the intrusion switch 57
Install the server cover 58
Cable the server 60
Power on the server 61
Validate server setup 61
Power off the server 61

Chapter 4. System configuration . . . 63
Update the firmware 63
Configure the firmware 63
Starting the Setup Utility program 63
Changing the display language of the Setup Utility program 63
Enabling or disabling a device 63
Enabling or disabling the automatic power-on 64
Acoustic/Thermal optimal performance. . . . 64
Enabling or disabling thermal alert logs (Windows only) 65
Configuration change detection. 65
Changing BIOS settings before installing a new operating system 65
Using passwords 66
Selecting a startup device 67
Exiting the Setup Utility program 68
Memory configuration 68
RAID configuration 69
Deploy the operating system. 69
Back up the server configuration 69
Update VPD (Vital Product Data) 70

Chapter 5. Resolving installation issues 71

Appendix A. Getting help and technical assistance 75
Before you call 75
Contacting Support 76

Appendix B. Trademarks 77

Index 79

© Copyright Lenovo 2018, 2024

Chapter 1. Introduction

The ThinkSystem ST50 server (Type 7Y48 and 7Y49) is a 4U tower server designed for performance and expansion for various IT workloads. With the modular design, the server is flexible to be customized for maximum storage capacity or high storage density with selectable input/output options and tiered system management.

Performance, ease of use, reliability, and expansion capabilities were key considerations in the design of the server. These design features make it possible for you to customize the system hardware to meet your needs today and provide flexible expansion capabilities for the future.

The server comes with a limited warranty. For details about the warranty, see:https://support.lenovo.com/us/en/solutions/ht503310

For details about your specific warranty, see:http://datacentersupport.lenovo.com/warrantylookup

Identifying your server

When you contact Lenovo for help, the machine type and serial number information help support technicians to identify your server and provide faster service.

The machine type and serial number are on the ID label on the front of the server.

The following illustration shows the location of the ID label.

Note: The illustrations in this document might differ slightly from your server.

© Copyright Lenovo 2018, 2024

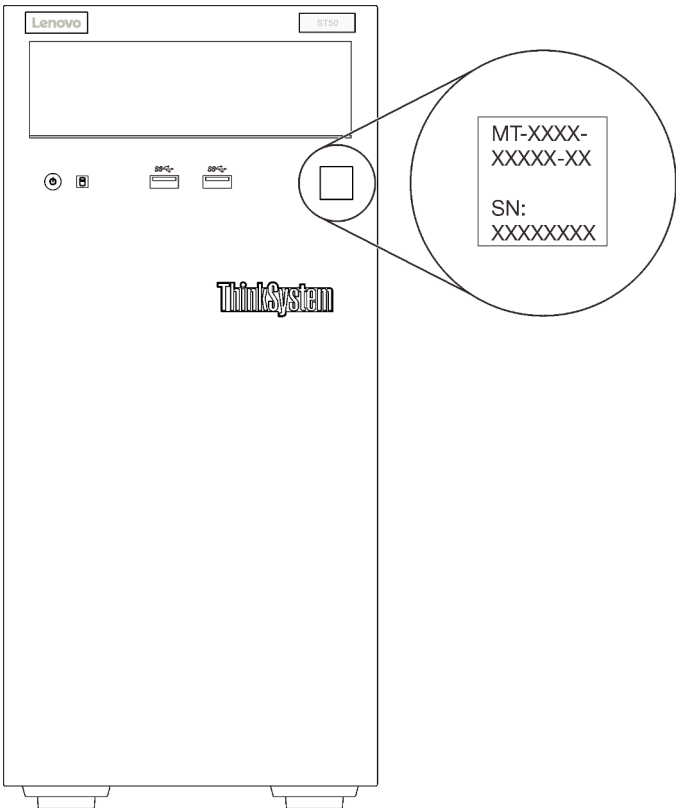

Figure 1. Location of the ID label

Quick response code

The system service label, which is on the inside of the server cover, provides a quick response (QR) code for mobile access to service information. Scan the QR code with a mobile device and a QR code reader application to get quick access to the Lenovo Service web site for this server. The Lenovo Service web site provides additional information for parts installation and replacement videos, and error codes for server support.

The following illustration shows the QR code.

Figure 2. QR code

Server package contents

When you receive your server, verify that the shipment contains everything that you expected to receive.

The server package includes the following items:

Note: Items marked with asterisk (*) are available on some models only.

1. Server
2. Keyboard
3. Miscellaneous kit, including items such as accessory kit, power cords* and documentation.

It is recommended to reserve the miscellaneous kit for future system upgrade or maintenance.

Server form factor

The ThinkSystem ST50 server is designed to support both tower and rack form factors.

You can change the server from tower form factor to rack form factor by installing the tower-to-rack conversion kit. For instructions on how to install the tower-to-rack conversion kit, refer to the documentation that comes with the conversion kit.

Features

Performance, ease of use, reliability, and expansion capabilities were key considerations in the design of the server. These design features make it possible for you to customize the system hardware to meet your needs today and provide flexible expansion capabilities for the future.

Your server implements the following features and technologies:

- **UEFI-compliant server firmware**

  Lenovo ThinkSystem firmware is Unified Extensible Firmware Interface (UEFI) compliant. UEFI replaces BIOS and defines a standard interface between the operating system, platform firmware, and external devices.

  Lenovo ThinkSystem servers are capable of booting UEFI-compliant operating systems, BIOS-based operating systems, and BIOS-based adapters as well as UEFI-compliant adapters.

  Note: The server does not support Disk Operating System (DOS).

- **Large system-memory capacity**

  The server supports error-correcting code unbuffered DIMM (ECC UDIMM) and non-error-correcting code unbuffered DIMM (non-ECC DIMM). For more information about the specific types and maximum amount of memory, see "Specifications" on page 4.

  Note: Non-ECC UDIMM is only supported in Chinese Mainland.

- **Large data-storage capacity and hot-swap capability**

  Some server models support a maximum of four drives.

- **Mobile access to Lenovo Service Information website**

  The server provides a QR code on the system service label, which is on the inside of the server cover, that you can scan the QR code with a mobile device and a QR code reader application to get quick access to the Lenovo Service web site for this server. The Lenovo Service Information web site provides additional information for parts installation and replacement videos, and error codes for server support.

- **Lenovo XClarity Provisioning Manager (optional)**

  Lenovo XClarity Provisioning Manager allows you to configure Redundant Array of Independent Disks (RAID), install compatible operating systems as well as associated device drivers, and run diagnostics. For

more details, see the LXPM document version compatible with your server at https://pubs.lenovo.com/lxpm-overview/.

Important: Lenovo XClarity Provisioning Manager (LXPM) supported version varies by product. All versions of Lenovo XClarity Provisioning Manager are referred to as Lenovo XClarity Provisioning Manager and LXPM in this document, unless specified otherwise. To see the LXPM version supported by your server, go to https://pubs.lenovo.com/lxpm-overview/.

- **Tremendous durability**

  The system has been verified to run even enterprise workload, 24/7.

Specifications

The following information is a summary of the features and specifications of the server. Depending on the model, some features might not be available, or some specifications might not apply.

Table 1. Specifications, Type 7Y48 and 7Y49

Specification	Description
Dimension	4U server • Height: 375.5 mm (14.78 inches) • Width: 174.9 mm (6.89 inches) • Depth: 423.4 mm (16.67 inches)
Weight (depending on the configuration)	• Maximum: 11.2 kg (24.69 lbs)
Processor	This server supports one of the following Intel® processors: • Xeon® E3–21XX • Xeon® E3–22XX • Core i3 • Pentium Gold • Celeron G For a list of supported processors, see: http://datacentersupport.lenovo.com

Memory	See "DIMM installation rules" on page 37 for detailed information about memory configuration and setup.
	• Minimum: 8 GB
	• Maximum: 128 GB
	• DIMM types:
	  – ECC UDIMM
	  – 8 GB 1RX8 PC-4-2666E 8 Gbit ECC UDIMM
	  – 16 GB 2RX8 PC-4-2666E 8 Gbit ECC UDIMM
	  – Non-ECC UDIMM
	  – 4 GB 1RX16 PC-4-2666U 8 Gbit Non-ECC UDIMM
	  – 8 GB 1RX8 PC-4-2666U 8 Gbit Non-ECC UDIMM
	  – 16 GB 2RX8 PC-4-2666U 8 Gbit Non-ECC UDIMM
	
	  Notes:
	  – Non-ECC UDIMM is only supported in Chinese Mainland.
	  – ECC and non-ECC cannot be mixed.
	• Slots: four DIMM slots (two channels, two DIMMs per channel)
	Note: List of supported memory module is different for 1st generation (Skylake) and 2nd generation (Cascade Lake) Intel Xeon processors. Make sure to install compatible memory modules to avoid system error. For a list of supported DIMMs, see: https://serverproven.lenovo.com/.

Table 1. Specifications, Type 7Y48 and 7Y49 (continued)

Specification	Description
Storage expansion	Four drive bays and one optional USB dual SD card adapter are available for storage expansion and support the following types of drives: • Bay 1 to 3 support the following: – 3.5-inch hard-disk or solid-state drives – 2.5-inch hard-disk or solid-state drives (in 3.5 to 2.5-inch drive bay adapter) • Bay 4 supports the following: – One half-height optical disk drive – One LTO/RDX tape drive **Notes:** – Before installing the LTO tape drive, make sure to purchase the corresponding optional tape drive cable kit. – Different storage configurations require different cooling settings. See "Acoustic/Thermal optimal performance" on page 64. – One drive bay adapter for hard-disk/solid-state drive – One drive bay adapter for hard-disk/solid-state drive and slim optical drive • USB dual SD card adapter supports two SD card with the following capacities: – 32 GB – 64 GB **Note:** The dual SD card adapter does not support hot-swap. Make sure to power off the server before installing or removing this adapter.
Expansion slots	Three PCIe expansion slots are available: • Slot 1: PCI Express 3.0 x16 • Slot 2: PCI Express 3.0 x1 • Slot 3: PCI Express 3.0 x4
Integrated functions	• Six universal serial bus (USB) connectors – Two USB 3.1 Gen1 connectors on the front – Four USB connectors on the rear: – Two USB 3.1 Gen1 connectors – Two USB 2.0 connectors • One serial connector • One Line Out connector • Two DisplayPort connectors **Notes:** Dual DisplayPort output will only work in the following conditions: – Windows based OS: Intel VGA driver is installed. – Linux (Red Hat 7.5 OS): kernel/boot parameters "i915.alpha_support=1" is added.
Network	One 1 Gbps RJ-45 Ethernet connector with Intel I219-LM **Note:** Different network card configurations require different cooling settings. See "Acoustic/Thermal optimal performance" on page 64.
Systems management	• Intel® Active Management Technology (AMT) 12 • XClarity Provisioning Manager Lite (optional) **Notes:** • Make sure the power is on when executing remote access and power policy setup. • Ignore the warning message "Unrecoverable PS/2 or USB keyboard failure," because the system does not support PS/2 devices. • Some Lenovo systems management applications, including XClarity Administrator, XClarity Controller, XClarity Energy Manager, and XClarity Essentials, are not supported by ST50.

Table 1. Specifications, Type 7Y48 and 7Y49 (continued)

Specification	Description
RAID (depending on model)	The following options with RAID levels 0, 1, and 5 are available for this server. In addition, RAID level 10 is available when four drives are installed in the server. • ThinkSystem 430-8i SAS/SATA 12Gb HBA • ThinkSystem RAID 530-8i PCIe 12Gb adapter • ThinkSystem RAID 730-8i 1GB cache PCIe 12Gb adapter • ThinkSystem RAID 930-8i 2GB flash PCIe 12Gb adapter • ThinkSystem 430-8e SAS/SATA 12Gb HBA • ThinkSystem RAID 930-8e 4GB flash PCIe 12Gb adapter For a list of supported adapters, see: http://datacentersupport.lenovo.com **Notes:** • Managing these optional RAID/HBA adapters in **Setup Utility** requires CSM to be disabled. Go to **Startup**, and click on **CSM** to disable it. After CSM is disabled, RAID/HBA ROM will be present in **Devices** tab in **Setup Utility**. • Refer to *Maintenance Manual* to resolve RAID volume failure in the case of ThinkSystem RAID adapter virtual driver failure. • Different RAID adapter configurations require different cooling settings. See "Acoustic/Thermal optimal performance" on page 64.
GPGPU adapter	The following option GPGPU adapter is available for this server: • ThinkSystem NVIDIA Quadro P620 2GB PCIe Active GPU **Notes:** • This GPGPU adapter supports 4K resolution. • It is recommend to use certified display adapter cables.
Fans	This server supports three fans: • One on the front • One on the rear • One on the heat sink

Electrical input	This server supports one of the following non-hot-swap, non-redundant power supplies:
	• 250-watt Platinum
	  – input power 115V or 230V ac
	• 400-watt Bronze
	  – input power 115V or 230V ac

Minimal configuration	• One processor • One 8 GB ECC UDIMM in slot 1 • One power supply • One HDD/SSD • Power cord • Two system fans (front and rear)

Table 1. Specifications, Type 7Y48 and 7Y49 (continued)

Specification	Description
Acoustical noise emissions	• Sound power level – Idle – minimum: 2.9 bels – typical: 3.4 bels – maximum: 4.6 bels – Operating – minimum: 2.9 bels – typical: 3.4 bels – maximum: 4.6 bels • Sound pressure level (tabletop) – Idle – minimum: 17.3 dBA – typical: 25.3 dBA – maximum: 36.7 dBA – Operating – minimum: 17.1 dBA – typical: 25.6 dBA – maximum: 37.2 dBA • Sound pressure level (floor) – Idle – minimum: 15.2 dBA – typical: 18.4 dBA – maximum: 29.3 dBA – Operating – minimum: 15.1 dBA – typical: 19.5 dBA – maximum: 29.5 dBA **Notes:** 1. These sound levels were measured in controlled acoustical environments according to procedures specified by ISO 7779 and are reported in accordance with ISO 9296. 2. The declared acoustic noise levels are based on specified configurations, which may change slightly depending on configuration/conditions.
Heat output	Approximate heat output: • Minimum configuration: 454 BTU , 133 W (in BTU per hour and watts) • Maximum configuration: 5118 BTU, 1500 W (in BTU per hour and watts)

Table 1. Specifications, Type 7Y48 and 7Y49 (continued)

Specification	Description
Environment	ThinkSystem ST50 complies with ASHRAE Class A2 specifications. • Air temperature: – Operating – ASHRAE Class A2: 10°C to 35°C (50°F to 95°F); the maximum ambient temperature decreases by 1°C for every 300 m (984 ft) increase in altitude above 900 m (2,953 ft). – Server off: -10°C to 60°C (14°F to 140°F) – Shipment/storage: -40°C to 60°C (-40°F to 140°F) • Maximum altitude: 3,050 m (10,000 ft) • Relative Humidity (non-condensing): – Operating – ASHRAE Class A2: 8% to 80%; maximum dew point: 21°C (70°F) – Shipment/storage: 8% to 90% • Particulate contamination **Attention:** Airborne particulates and reactive gases acting alone or in combination with other environmental factors such as humidity or temperature might pose a risk to the server. For information about the limits for particulates and gases, see "Particulate contamination" in *ThinkSystem ST50 Maintenance Manual*.
Operating systems	Supported and certified operating systems: • Microsoft Windows Server • VMware ESXi • Red Hat Enterprise Linux • SUSE Linux Enterprise Server References: • Complete list of available operating systems: https://lenovopress.lenovo.com/osig. • OS deployment instructions: "Deploy the operating system" on page 69.

Particulate contamination

Attention: Airborne particulates (including metal flakes or particles) and reactive gases acting alone or in combination with other environmental factors such as humidity or temperature might pose a risk to the device that is described in this document.

Risks that are posed by the presence of excessive particulate levels or concentrations of harmful gases include damage that might cause the device to malfunction or cease functioning altogether. This specification sets forth limits for particulates and gases that are intended to avoid such damage. The limits must not be viewed or used as definitive limits, because numerous other factors, such as temperature or moisture content of the air, can influence the impact of particulates or environmental corrosives and gaseous contaminant transfer. In the absence of specific limits that are set forth in this document, you must implement practices that maintain particulate and gas levels that are consistent with the protection of human health and safety. If Lenovo determines that the levels of particulates or gases in your environment have caused damage to the device, Lenovo may condition provision of repair or replacement of devices or parts on implementation of appropriate remedial measures to mitigate such environmental contamination. Implementation of such remedial measures is a customer responsibility.

Table 2. Limits for particulates and gases

Contaminant	Limits
Reactive gases	Severity level G1 as per ANSI/ISA 71.04-1985[1]: • The copper reactivity level shall be less than 200 Angstroms per month (Å/month ≈ 0.0035 µg/cm^2-hour weight gain).[2] • The silver reactivity level shall be less than 200 Angstroms per month (Å/month ≈ 0.0035 µg/cm^2-hour weight gain).[3] • The reactive monitoring of gaseous corrosivity must be conducted approximately 5 cm (2 in.) in front of the rack on the air inlet side at one-quarter and three-quarter frame height off the floor or where the air velocity is much higher.
Airborne particulates	Data centers must meet the cleanliness level of ISO 14644-1 class 8. For data centers without airside economizer, the ISO 14644-1 class 8 cleanliness might be met by choosing one of the following filtration methods: • The room air might be continuously filtered with MERV 8 filters. • Air entering a data center might be filtered with MERV 11 or preferably MERV 13 filters. For data centers with airside economizers, the choice of filters to achieve ISO class 8 cleanliness depends on the specific conditions present at that data center. • The deliquescent relative humidity of the particulate contamination should be more than 60% RH.[4] • Data centers must be free of zinc whiskers.[5]

[1] ANSI/ISA-71.04-1985. *Environmental conditions for process measurement and control systems: Airborne contaminants*. Instrument Society of America, Research Triangle Park, North Carolina, U.S.A.

[2] The derivation of the equivalence between the rate of copper corrosion growth in the thickness of the corrosion product in Å/month and the rate of weight gain assumes that Cu_2S and Cu_2O grow in equal proportions.

[3] The derivation of the equivalence between the rate of silver corrosion growth in the thickness of the corrosion product in Å/month and the rate of weight gain assumes that Ag_2S is the only corrosion product.

[4] The deliquescent relative humidity of particulate contamination is the relative humidity at which the dust absorbs enough water to become wet and promote ionic conduction.

[5] Surface debris is randomly collected from 10 areas of the data center on a 1.5 cm diameter disk of sticky electrically conductive tape on a metal stub. If examination of the sticky tape in a scanning electron microscope reveals no zinc whiskers, the data center is considered free of zinc whiskers.

Chapter 2. Server components

This section provides information that helps locate the server components.

Front view

Read this section to identify important components on the front of this server.

The following configurations are available for this sever:

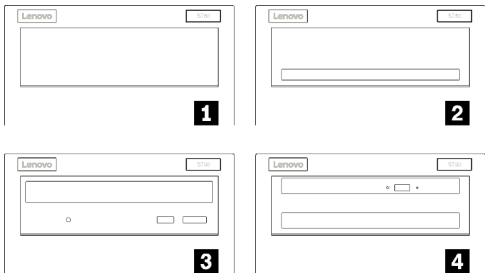

Figure 3. Front views of various configurations

Table 3. Front views of different configurations

1 One drive bay filler
2 One drive bay adapter for hard-disk/solid-state drive
3 One half height optical or LTO/RDX tape drive
4 One drive bay adapter for slim optical drive and hard-disk/solid-state drive

Front panel

Some crucial key controls, connectors, and LEDs are located on the front panel of the server.

The following illustration shows the controls, connectors, and LEDs on the front panel of the server.

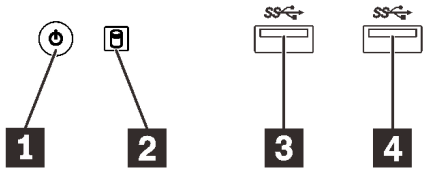

Figure 4. Components on the front panel

Table 4. Components on the front panel

1 Power button with power status LED (green)	3 USB 3.1 Gen1 connector
2 Drive activity LED (green)	4 USB 3.1 Gen1 connector

1 Power button with power status LED (green)

© Copyright Lenovo 2018, 2024

Press the power button to turn on the server, or hold it for several seconds to turn the server off when the server cannot be turned off in the operating system. The power status LED helps determine the current power status.

Status	Color	Description
Solid on	Green	DC power is present and the server is on.
Off	None	No DC power is present and the server is off.

2 Drive activity LED (green)

This LED indicates the activity of the drives.

Table 5. Drive activity LED behavior

Status	Color	Description
Solid on	Green	The drives are active.
Off	None	The drives are not active.

Note: The drive activity LED only indicates the activities of drives that are connected to the SATA ports on the system board.

3 4 USB 3.1 Gen1 connectors

Available for a device that require USB 2.0 or 3.0 connection, such as a keyboard, a mouse, or a USB flash drive.

Rear view

Refer this section to identify important components on the rear of the server.

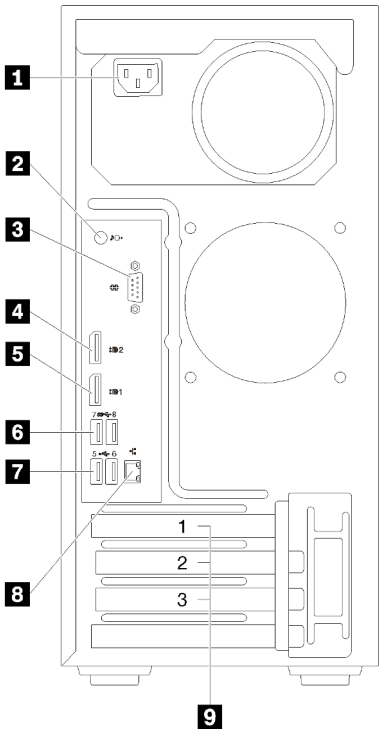

Figure 5. Rear view

Table 6. Rear view

1 Power supply	6 USB 3.1 Gen1 connectors (2)
2 Line Out connector	7 USB 2.0 connectors (2)
3 Serial connector	8 Ethernet connector
4 DisplayPort connector 2	9 PCIe slots (3)
5 DisplayPort connector 1	

1 Power supply unit

Connect the power cord to this component.

2 Line Out connector

Connect a audio device, such as speakers or earphones, to this connector.

Notes:

1. This connector only supports Windows client.
2. User may be aware of the low frequency noise via audio port in particular environments.
3. Excessive sound pressure from ear-/headphone can cause hearing damage.

3 Serial connector

Connect a 9-pin serial device to this connector.

4 5 DisplayPort connectors

Connect a DisplayPort-compatible video device, such as a monitor, to this connector.

6 7 USB connectors

Available for a device that require USB 2.0 or 3.0 connection, such as a keyboard, a mouse, or a USB flash drive.

8 Ethernet connector

Connect an Ethernet cable to this connector for a LAN . This connector comes with LED for status indication.

9 PCIe slots

This server comes with three PCIe slots on the system board. For detailed information about the PCIe slots, see “Specifications” on page 4.

System board components

The illustration in this section shows the component locations on the system board.

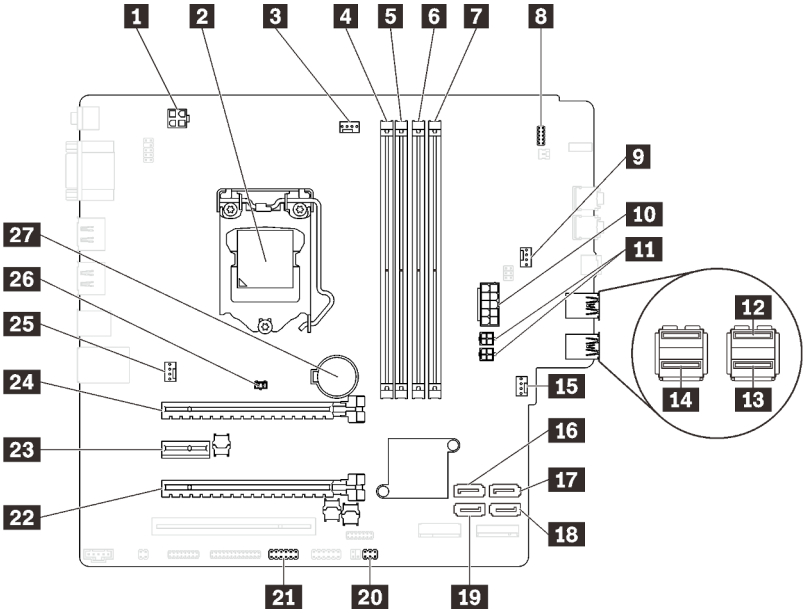

Figure 6. System board components

Table 7. Components on the system board

1 Processor power connector	15 Front fan power connector
2 Processor socket	16 SATA connector 3
3 Processor fan power connector	17 SATA connector 4
4 DIMM slot 1	18 SATA connector 2
5 DIMM slot 2	19 SATA connector 1
6 DIMM slot 3	20 Thermal sensor connector
7 DIMM slot 4	21 USB connector for dual SD card adapter
8 Front panel connector	22 PCIe slot 3
9 Drive bay adapter fan power connector	23 PCIe slot 2
10 System power connector	24 PCIe slot 1
11 SATA power connector	25 Rear fan power connector
12 Front panel USB connector	26 Intrusion switch connector
13 Front panel USB connector	27 3V CMOS battery (CR2032)
14 Slim optical drive USB connector	

System board jumpers

The following illustration shows the location of the jumpers on the server.

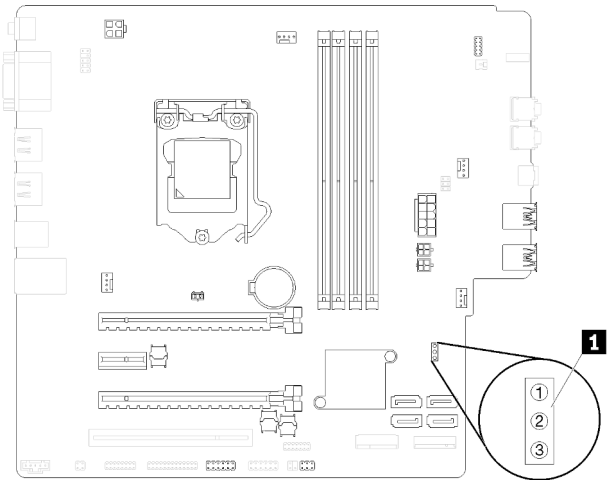

Figure 7. System board jumpers

Table 8. Jumper description

Jumper name	Jumper setting
1 CLR_CMOS	• Pin 1 and 2: default • Pin 1 and 3: clear CMOS

Important:

- Before you move the jumpers, turn off the server. Then, disconnect all power cords and external cables. Do not open your server or attempt any repair before reading and understanding the following information:
  - https://pubs.lenovo.com/safety_documentation/
- Any system-board switch or jumper block that is not shown in the illustrations in this document are reserved.

Server locks

Locking the server cover prevents unauthorized access to the inside of your server.

Kensington-style cable lock

You can use a Kensington-style cable lock to secure your server to a desk, table, or other non-permanent fixture. The cable lock attaches to the security-lock slot at the rear of the server, and is operated with a key or combination. The cable lock also locks the buttons used to remove the server cover. This is the same type of lock used with many notebook computers. You can order an integrated cable lock directly from Lenovo by searching for Kensington at:

http://datacentersupport.lenovo.com

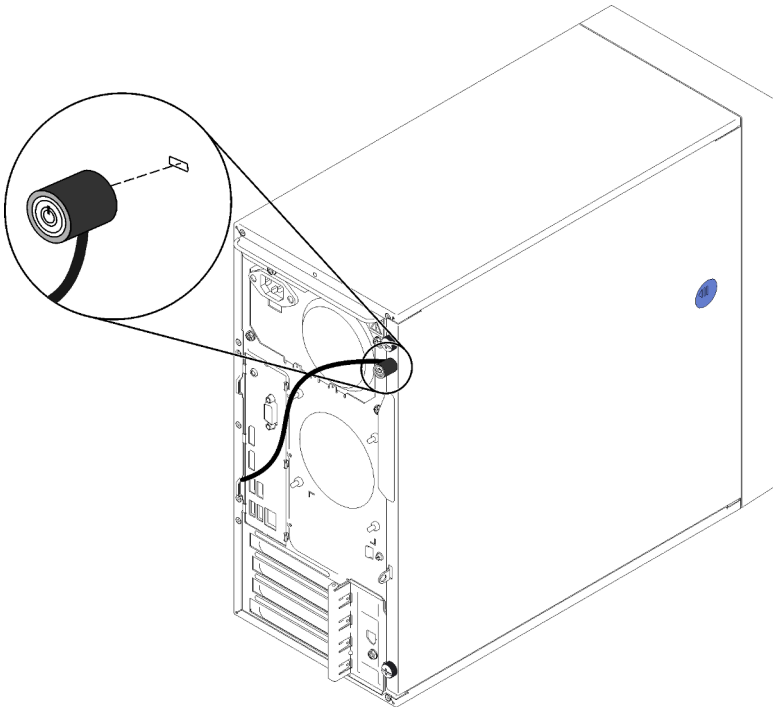

Figure 8. Kensington-style cable lock

Padlock

This server comes with a padlock loop. When a padlock is installed, the server cover cannot be removed.

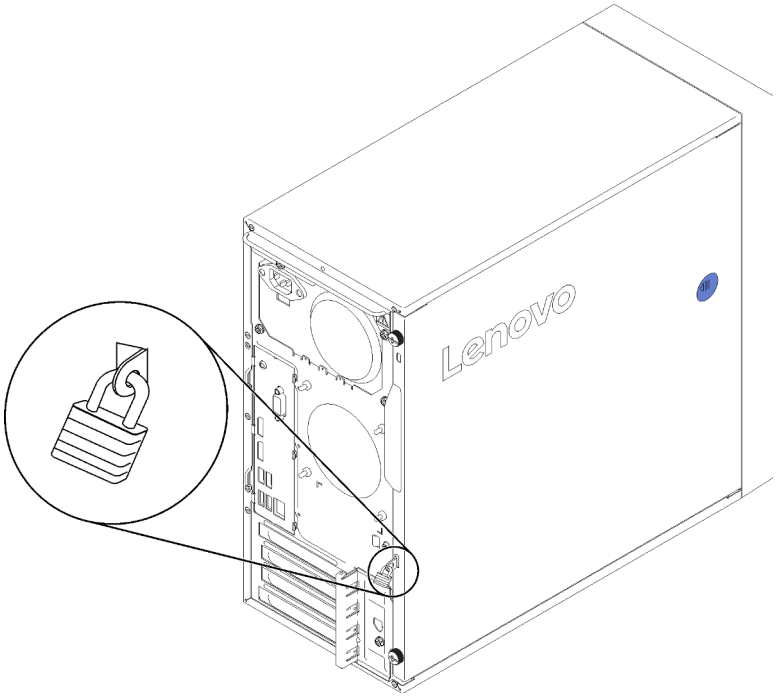

Figure 9. Padlock

Dual SD card adapter module

Read this section to learn about the dual SD card adapter module.

Figure 10. Dual SD card adapter module

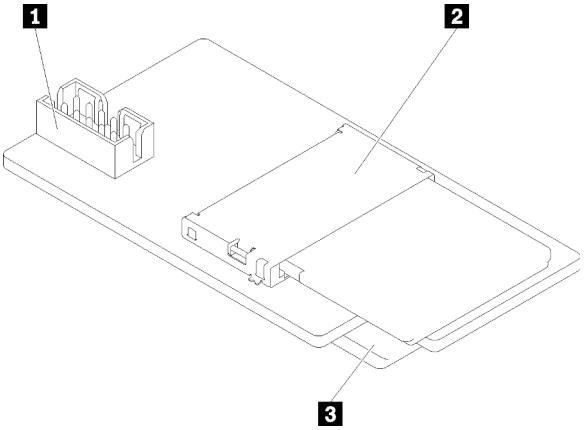

1 Connector for the system board	3 SD card slot (bottom)
2 SD card slot (top)	

RAID adapters

Use this information to locate the connectors on the optional RAID adapters.

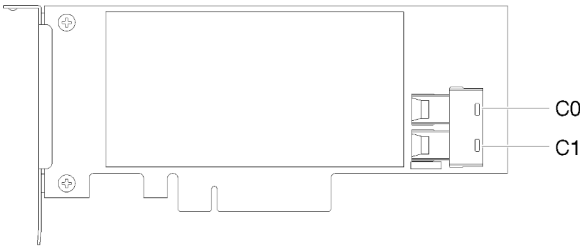

Figure 11. Connectors on SATA/SAS RAID adapter (8i)

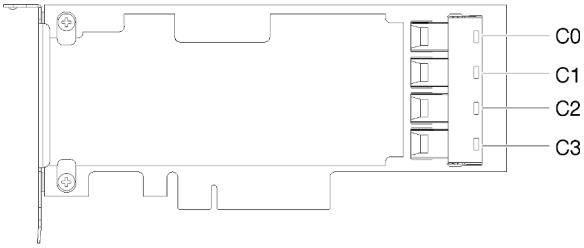

Figure 12. Connectors on PCIe switch card

Flash power module

Use this information to locate the connectors on the optional flash power module that comes with the RAID adapter.

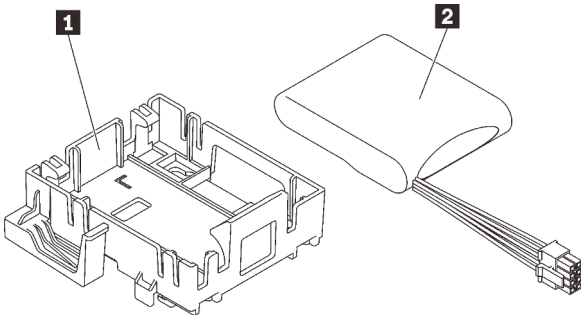

Figure 13. Flash power module

Table 9. Flash power module components

1 Flash power module retainer	2 Flash power module

Internal cable routing

Some of the components in the server come with internal cables meant for specific connectors.

Before connecting the cables, read the following guidelines carefully:

- Turn off the server before you connect or disconnect any internal cables.
- Refer to the documentation that comes with any external devices for additional cabling instructions.
- Make use of the identifiers printed on the cables to locate the proper connectors.
- Ensure that the cable is not pinched and does not cover any connectors or obstruct any components on the system board.

Attention: Strictly observe the following instructions to avoid damaging cable sockets on the system board. Any damage to the cable sockets might require replacing the system board.

- Connect cable connectors vertically or horizontally in alignment with the orientations of the corresponding cable sockets, avoiding any tilt.
- To disconnect cables from the system board, do as follows:
  1. Press and hold all latches, release tabs, or locks on cable connectors to release the cable connectors.
  2. Remove the cable connectors vertically or horizontally in alignment with the orientations of the corresponding cable sockets, avoiding any tilt.

     Note: The cable connectors might look different from those in the illustration, but the removal procedure is the same.

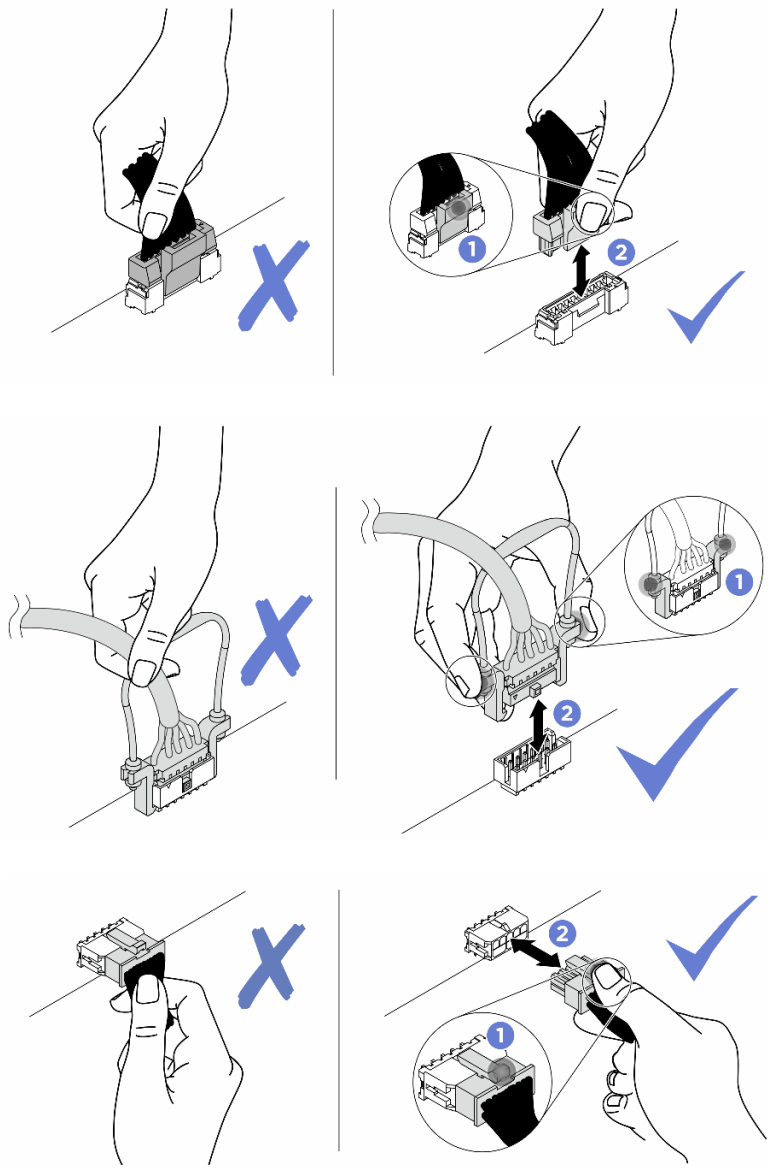

Cable routing for drive bay 1-3

Read this section to learn about cable routing for the drive in bay 1 to 3.

Drive bay 1

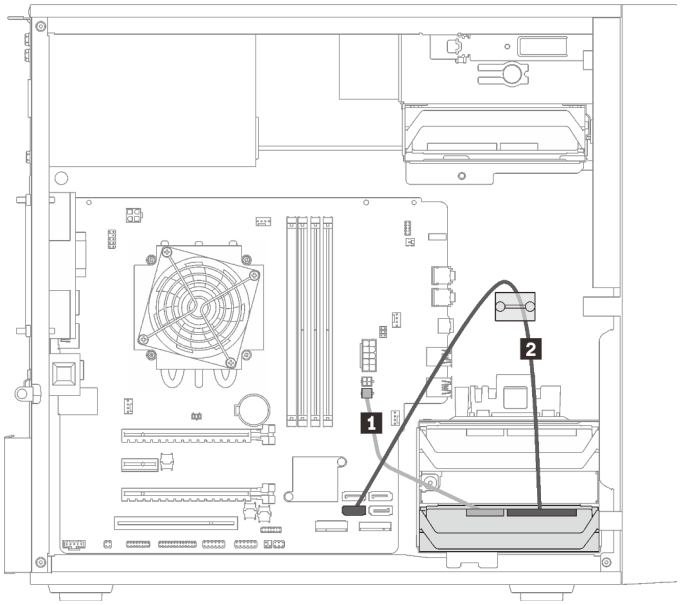

Figure 14. Cable routing for drive bay 1

Table 10. Cable routing for drive bay 1

1 Micro-fit to two 1X15P Y-splitter power cable, 450 mm	**2** SATA 7-pin signal cable with latch, 420mm

Drive bay 2

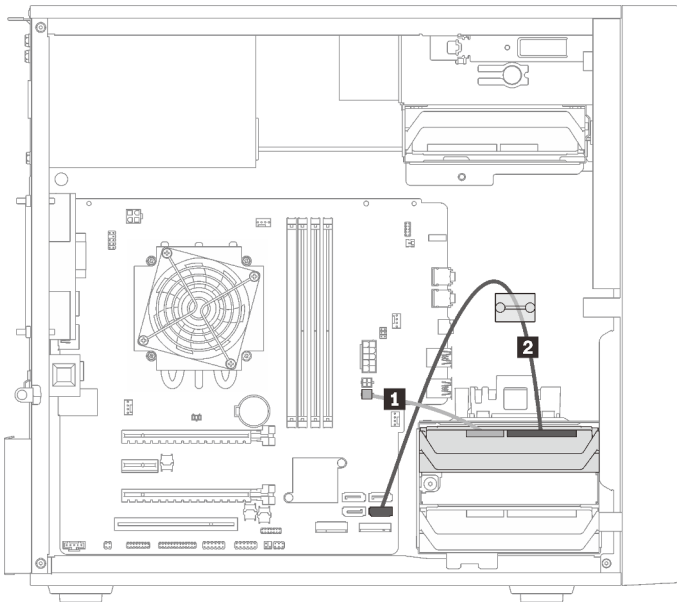

Figure 15. Cable routing for drive bay 2

Table 11. Cable routing for drive bay 2

1 Micro-fit to two 1X15P Y-splitter power cable, 450 mm	**2** SATA 7-pin signal cable with latch, 420mm

Drive bay 3

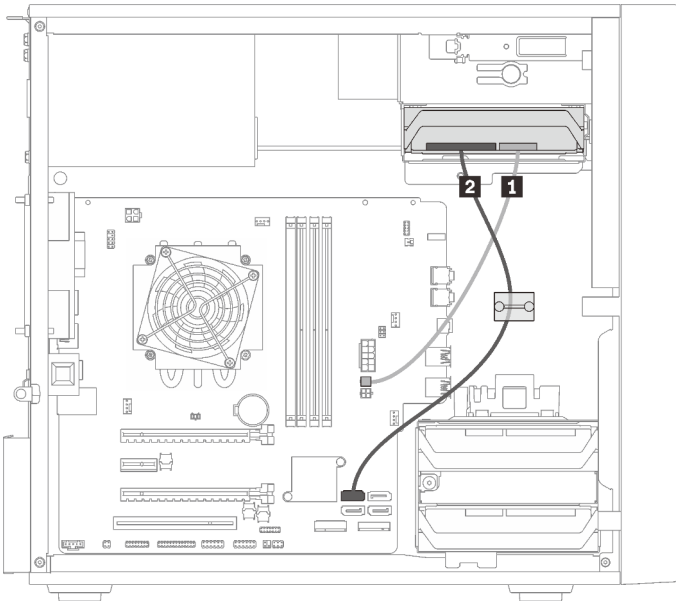

Figure 16. Cable routing for drive bay 3

Table 12. Cable routing for drive bay 3

1 Micro-fit to two 1X15P Y-splitter power cable, 450 mm	**2** SATA 7-pin signal cable with latch, 420mm

Cable routing for drive bay 4

Read this section to learn about cable routing for the drive in bay 4.

Optical/tape drive

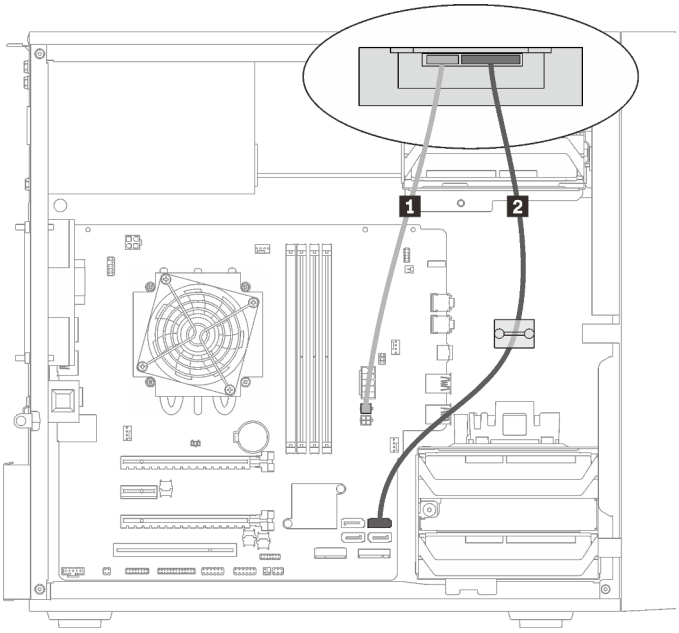

Figure 17. Cable routing for the optical/tape drive

Table 13. Cable routing for the optical/tape drive

1 Micro-fit to two 1X15P Y-splitter power cable, 450 mm	2 • Optical drive: SATA signal cable for optical drive • Tape drive: SAS signal cable for tape drive

Drive bay adapter with hard-disk or solid-state drive

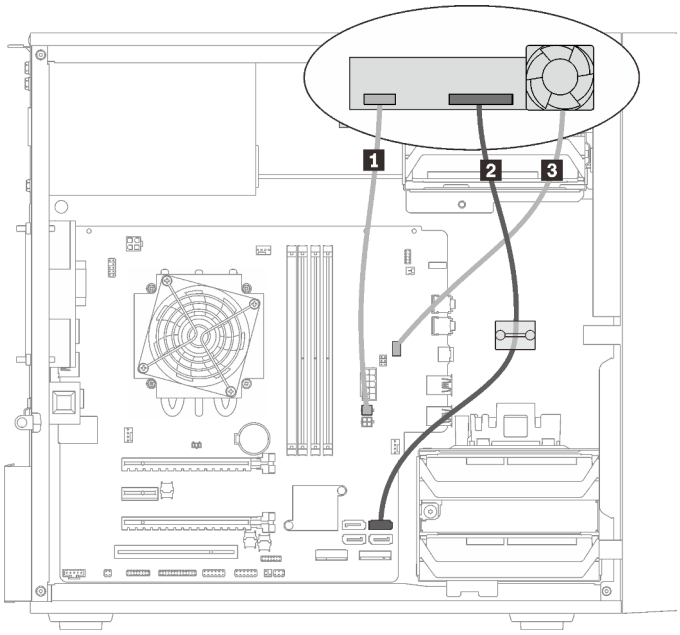

Figure 18. Cable routing for drive bay adapter with hard-disk or solid-state drive

Table 14. Cable routing for drive bay adapter with hard-disk or solid-state drive

1 Micro-fit to two 1X15P Y-splitter power cable, 450 mm	3 Drive bay adapter fan cable
2 SATA 7-pin signal cable with latch, 420mm	

Drive bay adapter with hard-disk or solid-state drive and slim optical drive

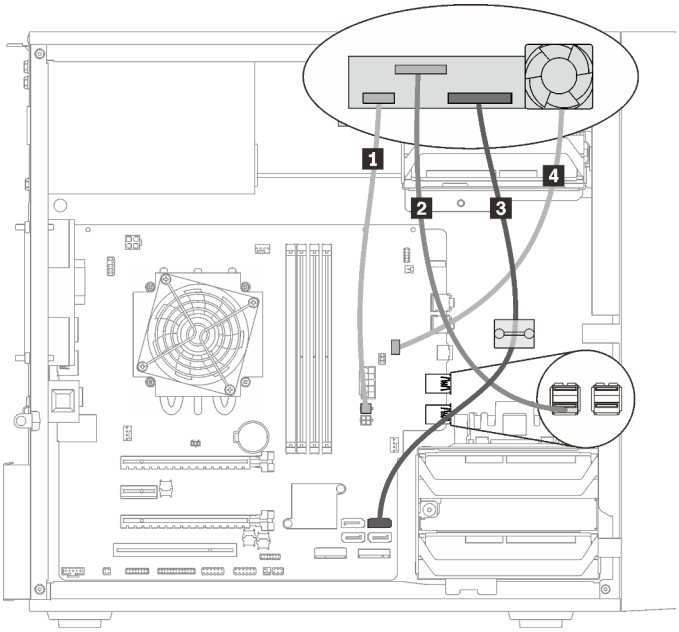

Figure 19. Cable routing for drive bay adapter with hard-disk or solid-state drive and slim optical drive

Table 15. Cable routing for drive bay adapter with hard-disk or solid-state drive and slim optical drive

1 Micro-fit to two 1X15P Y-splitter power cable, 450 mm	**3** SATA 7-pin signal cable with latch, 420mm
2 Slim optical drive USB 2.0 Mini B cable	**4** Drive bay adapter fan cable

Cable routing for the RAID adapter and drives

Read this section to learn about cable routing for the RAID adapter and drives.

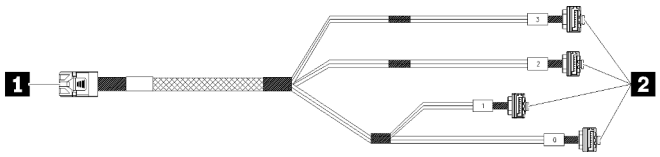

Figure 20. Mini SAS HD to 4 SATA 7-pin cable

Table 16. **Mini SAS HD to 4 SATA 7-pin cable**

1 Connector for the X30 series RAID adapter (connector C0)	**2** Connectors for the drives

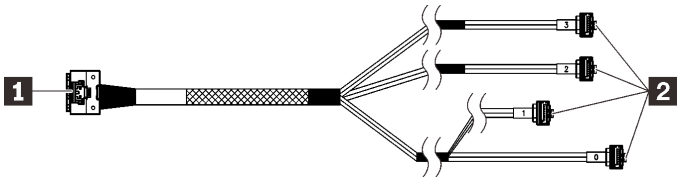

The break lines indicate that part of the cable is hidden in the illustration.

Figure 21. Slimline HD to 4 SATA 7-pin cable

Table 17. **Slimline HD to 4 SATA 7-pin cable**

1 Connector for the X40 series RAID adapter	**2** Connectors for the drives

Notes:

1. The RAID adapter can be installed in PCIe slot 1 or 3.
2. Make sure the signal cable go through the cable clip.

Cable routing for two drives with the RAID adapter

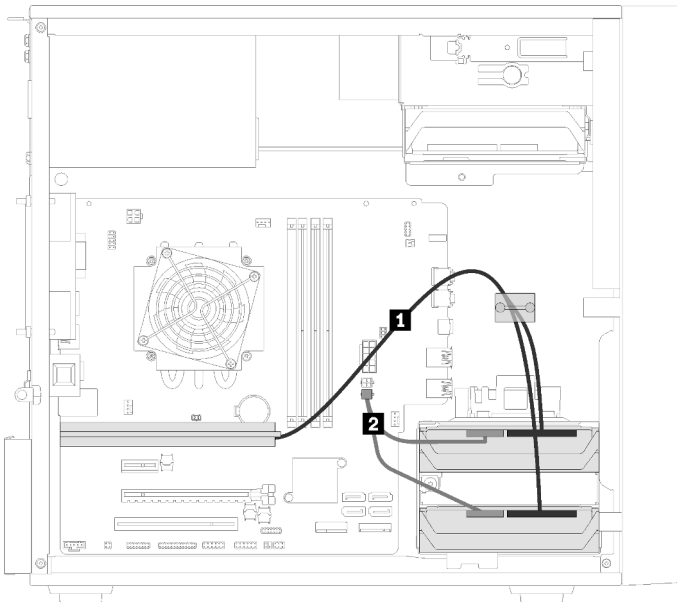

Figure 22. Cable routing for two drives with the RAID adapter

Table 18. Cable routing for two drives with the RAID adapter

1 One of the following cable • Mini SAS HD to 4 SATA 7-pin cable (for X30 series RAID adapter) • Slimline HD to 4 SATA 7-pin cable (for X40 series RAID adapter)	**2** Micro-fit to two 1X15P Y-splitter power cable, 450 mm

Cable routing for three drives with the RAID adapter

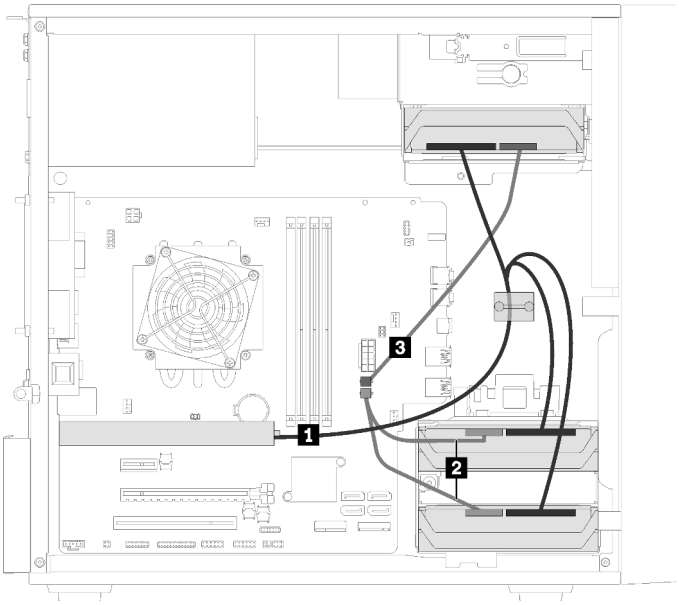

Figure 23. Cable routing for three drives with the RAID adapter

Table 19. Cable routing for three drives with the RAID adapter

1 One of the following cable • Mini SAS HD to 4 SATA 7-pin cable (for X30 series RAID adapter) • Slimline HD to 4 SATA 7-pin cable (for X40 series RAID adapter)	**2** **3** Micro-fit to two 1X15P Y-splitter power cable, 450 mm

Cable routing for four drives with the RAID adapter

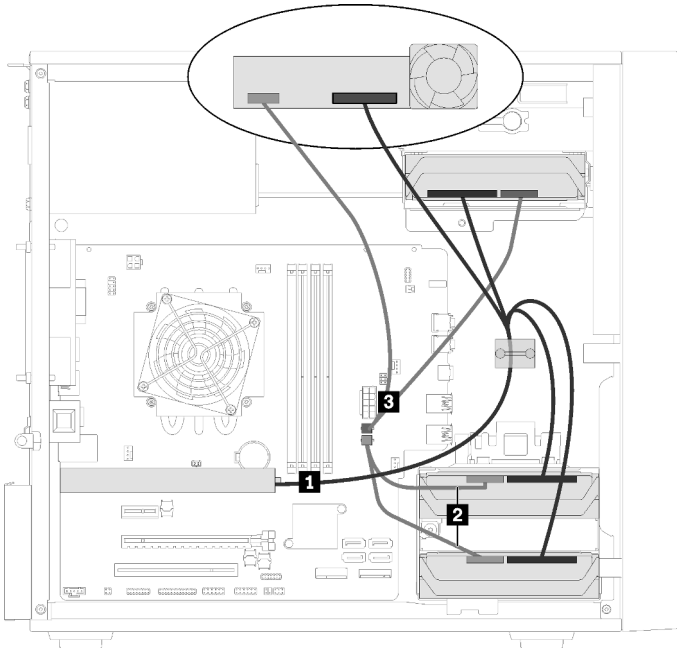

Figure 24. Cable routing for four drives with the RAID adapter

Table 20. Cable routing for four drives with the RAID adapter

1 One of the following cable • Mini SAS HD to 4 SATA 7-pin cable (for X30 series RAID adapter) • Slimline HD to 4 SATA 7-pin cable (for X40 series RAID adapter)	**2** **3** Micro-fit to two 1X15P Y-splitter power cable, 450 mm

Cable routing for the power supply unit

Read this section to learn about cable routing for the power supply unit.

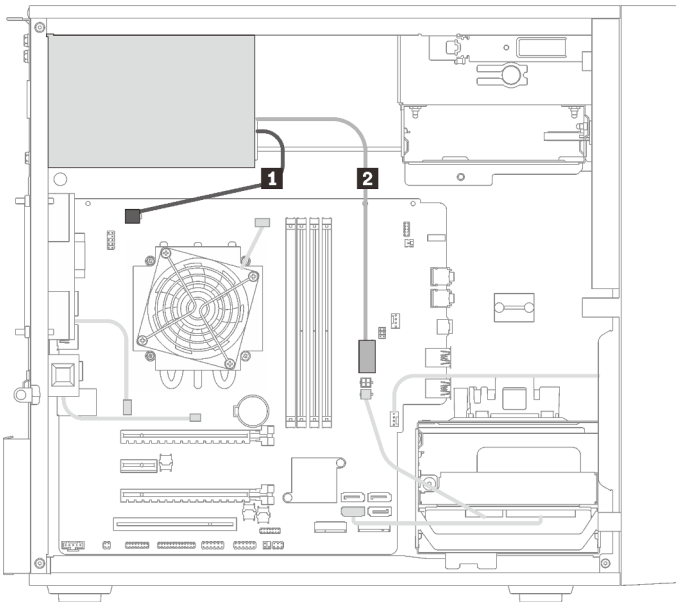

Figure 25. Cable routing for the power supply unit

Table 21. Cable routing for the power supply unit

1 Micro-fit to 1X15P and 1X4P Y-splitter power cable (4-pin SATA connector for processor power)	**2** Micro-fit to 1X15P and 1X4P Y-splitter power cable (15-pin connector for system power)

Note: **1** and **2** are parts of the same Y-splitter cable.

Cable routing for the fans

Read this section to learn about cable routing for the fans.

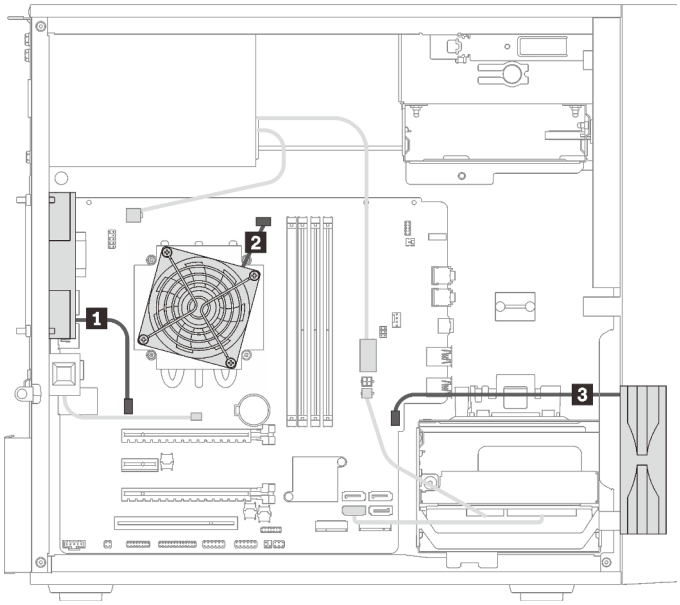

Figure 26. Cable routing for the fans

Table 22. Cable routing for the fans

1 Rear fan cable	3 Front fan cable
2 Heat sink fan cable	

Cable routing for the front panel

Read this section to learn about cable routing for the front panel.

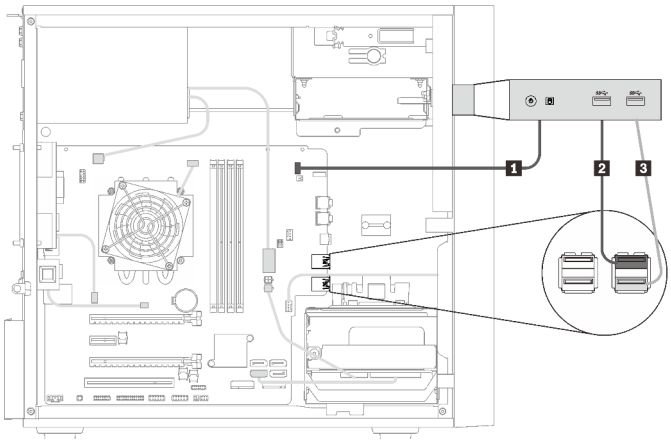

Figure 27. Cable routing for the front panel

Table 23. Cable routing for the front panel

1 Front panel cable	3 Front panel USB cable
2 Front panel USB cable	

Cable routing for the thermal sensor

Read this section to learn about cable routing for the thermal sensor.

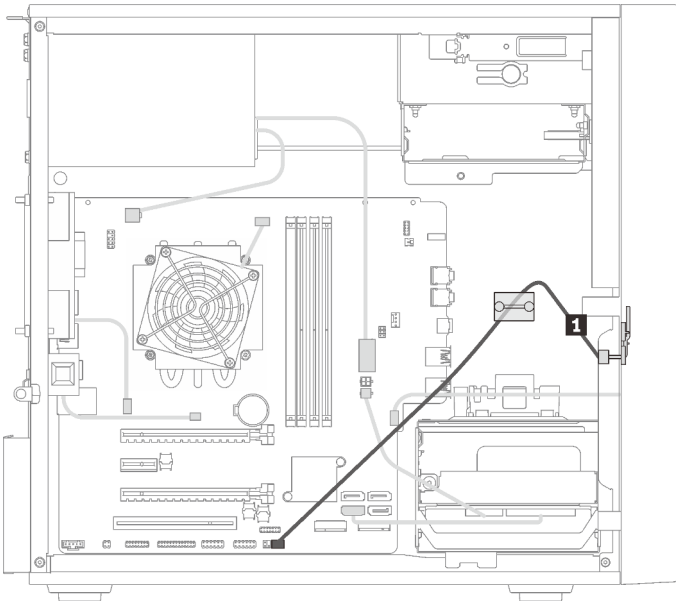

Figure 28. Cable routing for the thermal sensor

Table 24. Cable routing for the thermal sensor

1 Thermal sensor cable, 6-pin 460 mm

Note: Make sure the thermal sensor cable is routed through the cable clip.

Parts list

Use the parts list to identify each of the components that are available for your server.

Note: Depending on the model, your server might look slightly different from the illustration.

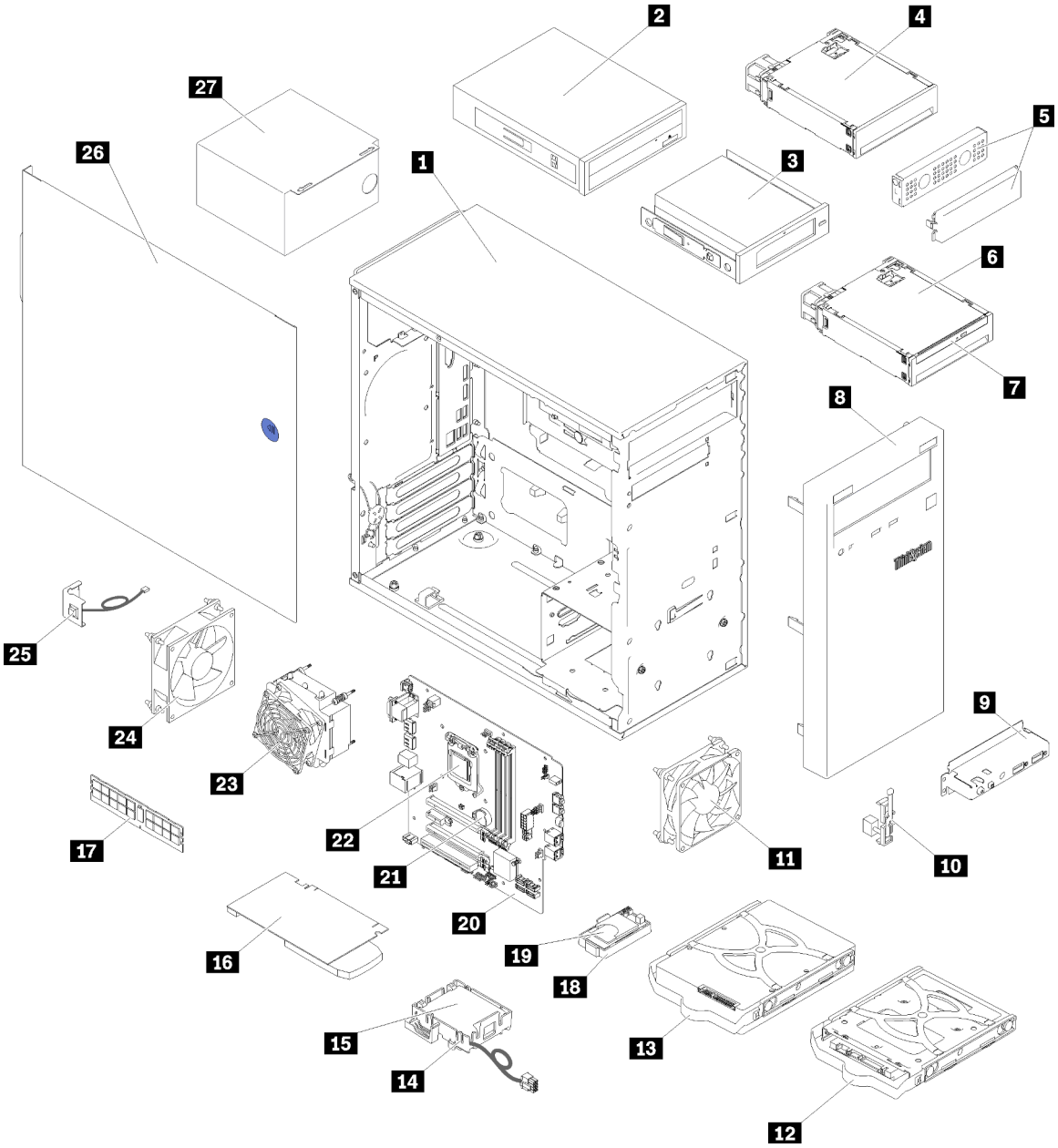

Figure 29. Server components

The parts listed in the following table are identified as one of the following:

- **Tier 1 customer replaceable unit (CRU):** Replacement of Tier 1 CRUs is your responsibility. If Lenovo installs a Tier 1 CRU at your request with no service agreement, you will be charged for the installation.
- **Tier 2 customer replaceable unit (CRU):** You may install a Tier 2 CRU yourself or request Lenovo to install it, at no additional charge, under the type of warranty service that is designated for your server.
- **Field replaceable unit (FRU):** FRUs must be installed only by trained service technicians.
- **Consumable and Structural parts:** Purchase and replacement of consumable and structural parts is your responsibility. If Lenovo acquires or installs a structural component at your request, you will be charged for the service.

Table 25. Parts listing

Index	Description	Tier 1 CRU	Tier 2 CRU	FRU	Consumable and Structural parts
For more information about ordering the parts shown in Figure 29 “Server components” on page 31: http://datacentersupport.lenovo.com/products/servers/thinksystem/st50/7y48/parts					
1	Chassis				√
2	Optical drive		√		
3	LTO/RDX tape drive	√			
4	Drive bay adapter for hard-disk/solid-state drive		√		
5	Drive bay filler and metal shield		√		
6	Drive bay adapter for slim optical drive and hard-disk/solid-state drive		√		
7	Slim optical drive		√		
8	Front bezel		√		
9	Front panel		√		
10	Thermal sensor		√		
11	Front fan		√		
12	2.5-inch simple-swap drive in the retainer		√		
13	3.5-inch simple-swap drive in the retainer		√		
14	Flash power module retainer		√		
15	Flash power module		√		
16	PCIe adapter		√		
17	DIMM	√			
18	Dual SD card adapter		√		
19	SD card		√		
20	System board			√	
21	CMOS battery (CR2032)				√
22	Processor			√	
23	Heat sink and fan module			√	
24	Rear fan		√		
25	Intrusion switch		√		
26	Server cover				√
27	Power supply unit			√	

Power cords

Several power cords are available, depending on the country and region where the server is installed.

To view the power cords that are available for the server:

1. Go to:

   http://dcsc.lenovo.com/#/
2. Click **Preconfigured Model** or **Configure to order**.
3. Enter the machine type and model for your server to display the configurator page.
4. Click **Power → Power Cables** to see all line cords.

Notes:

- For your safety, a power cord with a grounded attachment plug is provided to use with this product. To avoid electrical shock, always use the power cord and plug with a properly grounded outlet.
- Power cords for this product that are used in the United States and Canada are listed by Underwriter's Laboratories (UL) and certified by the Canadian Standards Association (CSA).
- For units intended to be operated at 115 volts: Use a UL-listed and CSA-certified cord set consisting of a minimum 18 AWG, Type SVT or SJT, three-conductor cord, a maximum of 15 feet in length and a parallel blade, grounding-type attachment plug rated 15 amperes, 125 volts.
- For units intended to be operated at 230 volts (U.S. use): Use a UL-listed and CSA-certified cord set consisting of a minimum 18 AWG, Type SVT or SJT, three-conductor cord, a maximum of 15 feet in length and a tandem blade, grounding-type attachment plug rated 15 amperes, 250 volts.
- For units intended to be operated at 230 volts (outside the U.S.): Use a cord set with a grounding-type attachment plug. The cord set should have the appropriate safety approvals for the country in which the equipment will be installed.
- Power cords for a specific country or region are usually available only in that country or region.

Chapter 3. Server hardware setup

To set up the server, install any options that have been purchased, cable the server, configure and update the firmware, and install the operating system.

Server setup checklist

Use the server setup checklist to ensure that you have performed all tasks that are required to set up your server.

The server setup procedure varies depending on the configuration of the server when it was delivered. In some cases, the server is fully configured and you just need to connect the server to the network and an ac power source, and then you can power on the server. In other cases, the server needs to have hardware options installed, requires hardware and firmware configuration, and requires an operating system to be installed.

The following steps describe the general procedure for setting up a server:

1. Unpack the server package. See "Server package contents" on page 2.
2. Set up the server hardware.
   a. Install any required hardware or server options. See the related topics in "Install server hardware options" on page 39.
   b. If necessary, install the server into a standard rack cabinet by using the tower-to-rack conversion kit. See the documentation that comes with the optional conversion kit.
   c. Connect the Ethernet cables and power cords to the server. See "Rear view" on page 12 to locate the connectors. See "Cable the server" on page 60 for cabling best practices.
   d. Power on the server. See "Power on the server" on page 61.
   e. Validate that the server hardware was set up successfully. See "Validate server setup" on page 61.
3. Configure the system.
   a. Update the firmware for the server, if necessary. See "Update the firmware" on page 63.
   b. Configure the firmware for the server. See "Configure the firmware" on page 63.

      The following information is available for RAID configuration:

      - https://lenovopress.com/lp0578-lenovo-raid-introduction
      - https://lenovopress.com/lp0579-lenovo-raid-management-tools-and-resources
   c. Install the operating system. See "Deploy the operating system" on page 69.
   d. Back up the server configuration. See "Back up the server configuration" on page 69.
   e. Install the applications and programs for which the server is intended to be used.

Installation Guidelines

Use the installation guidelines to install components in your server.

Before installing optional devices, read the following notices carefully:

Attention: Prevent exposure to static electricity, which might lead to system halt and loss of data, by keeping static-sensitive components in their static-protective packages until installation, and handling these devices with an electrostatic-discharge wrist strap or other grounding system.

© Copyright Lenovo 2018, 2024

- Read the safety information and guidelines to ensure that you work safely.
  - A complete list of safety information for all products is available at: https://pubs.lenovo.com/safety_documentation/
  - "Handling static-sensitive devices" on page 37
- Make sure the components you are installing are supported by the server. For a list of supported optional components for the server, see https://serverproven.lenovo.com/.
- When you install a new server, download and apply the latest firmware. This will help ensure that any known issues are addressed, and that your server is ready to work with optimal performance. Go to ThinkSystem ST50 Drivers and Software to download firmware updates for your server.

  Important: Some cluster solutions require specific code levels or coordinated code updates. If the component is part of a cluster solution, verify the latest Best Recipe code level menu for cluster supported firmware and driver before you update the code.
- It is good practice to make sure that the server is working correctly before you install an optional component.
- Keep the working area clean, and place removed components on a flat and smooth surface that does not shake or tilt.
- Do not attempt to lift an object that might be too heavy for you. If you have to lift a heavy object, read the following precautions carefully:
  - Make sure that you can stand steadily without slipping.
  - Distribute the weight of the object equally between your feet.
  - Use a slow lifting force. Never move suddenly or twist when you lift a heavy object.
  - To avoid straining the muscles in your back, lift by standing or by pushing up with your leg muscles.
- Make sure that you have an adequate number of properly grounded electrical outlets for the server, monitor, and other devices.
- Back up all important data before you make changes related to the disk drives.
- Have a small flat-blade screwdriver, a small Phillips screwdriver, and a T8 torx screwdriver available.
- You do not have to turn off the server to remove or install hot-swap power supplies or hot-plug USB devices. However, you must turn off the server before you perform any steps that involve removing or installing adapter cables, and you must disconnect the power source from the server before you perform any steps that involve removing or installing a DIMM.
- Blue on a component indicates touch points, where you can grip to remove a component from or install it in the server, open or close a latch, and so on.
- Orange on a component or an orange label on or near a component indicates that the component can be hot-swapped if the server and operating system support hot-swap capability, which means that you can remove or install the component while the server is still running. (Orange can also indicate touch points on hot-swap components.) See the instructions for removing or installing a specific hot-swap component for any additional procedures that you might have to perform before you remove or install the component.
- The Red strip on the drives, adjacent to the release latch, indicates that the drive can be hot-swapped if the server and operating system support hot-swap capability. This means that you can remove or install the drive while the server is still running.

  Note: See the system specific instructions for removing or installing a hot-swap drive for any additional procedures that you might need to perform before you remove or install the drive.
- After finishing working on the server, make sure you reinstall all safety shields, guards, labels, and ground wires.

System reliability guidelines

The system reliability guidelines to ensure proper system cooling.

Make sure the following requirements are met:

- When the server comes with redundant power, a power supply must be installed in each power-supply bay.
- Adequate space around the server must be spared to allow server cooling system to work properly. Leave approximately 50 mm (2.0 in.) of open space around the front and rear of the server. Do not place any object in front of the fans.
- For proper cooling and airflow, refit the server cover before you turn the power on. Do not operate the server for more than 30 minutes with the server cover removed, for it might damage server components.
- Cabling instructions that come with optional components must be followed.
- A failed fan must be replaced within 48 hours since malfunction.
- A removed hot-swap drive must be replaced within two minutes after removal.
- A removed hot-swap power supply must be replaced within two minutes after removal.
- Every air baffle that comes with the server must be installed when the server starts (some servers might come with more than one air baffle). Operating the server with a missing air baffle might damage the processor.
- All processor sockets must contain either a socket cover or a processor with heat sink.
- When more than one processor is installed, fan population rules for each server must be strictly followed.

Handling static-sensitive devices

Follow this procedure to handle static-sensitive devices.

Attention: Prevent exposure to static electricity, which might lead to system halt and loss of data, by keeping static-sensitive components in their static-protective packages until installation, and handling these devices with an electrostatic-discharge wrist strap or other grounding system.

- Limit your movement to prevent building up static electricity around you.
- Take additional care when handling devices during cold weather, for heating would reduce indoor humidity and increase static electricity.
- Always use an electrostatic-discharge wrist strap or other grounding system.
- While the device is still in its static-protective package, touch it to an unpainted metal surface on the outside of the server for at least two seconds. This drains static electricity from the package and from your body.
- Remove the device from the package and install it directly into the server without putting it down. If it is necessary to put the device down, put it back into the static-protective package. Never place the device on the server or on any metal surface.
- When handling a device, carefully hold it by the edges or the frame.
- Do not touch solder joints, pins, or exposed circuitry.
- Keep the device from others' reach to prevent possible damages.

DIMM installation rules

DIMMs must be installed in a specific order based on the memory configuration of the server.

Note: List of supported memory module is different for 1st generation (Skylake) and 2nd generation (Cascade Lake) Intel Xeon processors. Make sure to install compatible memory modules to avoid system error. For a list of supported DIMMs, see: https://serverproven.lenovo.com/.

The following illustration shows the location of the DIMM connectors on the system board.

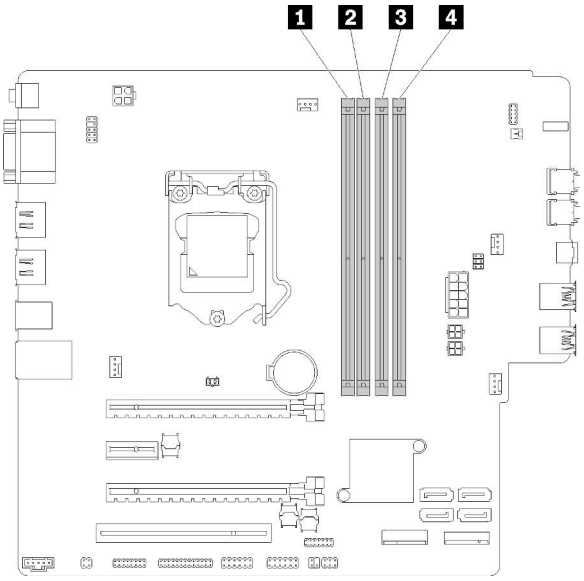

Table 26. DIMM slots on the system board

1 DIMM slot 1	3 DIMM slot 3
2 DIMM slot 2	4 DIMM slot 4

Figure 30. DIMM slots on the system board

For a list of supported DIMM options, see: https://serverproven.lenovo.com/

Notes: Make sure to adhere to the following rules:

- Do not mix ECC and non-ECC DIMMs.
- Do not mix DIMMs with different voltages.
- Do not mix low-voltage and regular UDIMMs.

This server supports independent mode only.

Independent mode

Independent mode provides high performance memory capability. You can populate all channels with no matching requirements. Individual channels can run at different DIMM timings, but all channels must run at the same interface frequency.

Notes:

- All the DIMMs to be installed should be of the same type and capacity.

The following table shows the DIMM population sequence for independent mode.

Table 27. Independent mode DIMM installation sequence

Total DIMMs	Slot 1	Slot 2	Slot 3	Slot 4
1	V			
2	V		V	
3	V	V	V	
4	V	V	V	V

Install server hardware options

This section has instructions for performing initial installation of optional hardware. Each component installation procedure references any tasks that need to be performed to gain access to the component being replaced.

Installation procedures are presented in the optimum sequence to minimize work.

Remove the server cover

Follow this procedure to remove the server cover.

"**Read** the installation Guidelines" on page 35

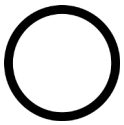

"**Power off** the server for this task" on page 61

"**ATTENTION: Static Sensitive Device** Ground package before opening" on page 37

S002

CAUTION:
The power-control button on the device and the power switch on the power supply do not turn off the electrical current supplied to the device. The device also might have more than one power cord. To remove all electrical current from the device, ensure that all power cords are disconnected from the power source.

S014

CAUTION:
Hazardous voltage, current, and energy levels might be present. Only a qualified service technician is authorized to remove the covers where the label is attached.

S033

CAUTION:
Hazardous energy present. Voltages with hazardous energy might cause heating when shorted with metal, which might result in spattered metal, burns, or both.

Complete the following steps to remove the server cover:

Step 1. Remove the two screws that secure the cover to the chassis.

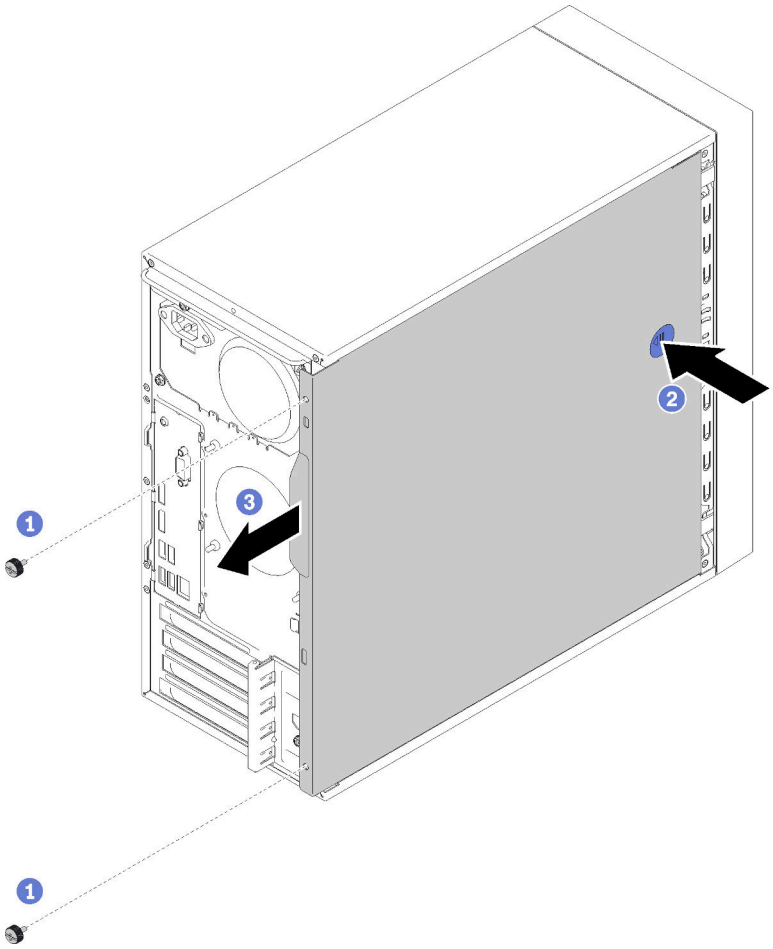

Figure 31. Removing the server cover

Step 2. Press and hold on the release button, and slide the cover towards the rear of the server to remove it.

Attention: For proper cooling, always install the server cover before powering on the server. Operating the server without the cover properly installed might result in server component damage.

Demo video

Watch the procedure on YouTube

Remove the front bezel

Follow this procedure to remove the front bezel.

"**Read** the installation Guidelines" on page 35	"**Power off** the server for this task" on page 61	"**ATTENTION: Static Sensitive Device** Ground package before opening" on page 37

S002

CAUTION:
The power-control button on the device and the power switch on the power supply do not turn off the electrical current supplied to the device. The device also might have more than one power cord. To remove all electrical current from the device, ensure that all power cords are disconnected from the power source.

To remove the front bezel, complete the following step:

Step 1. Release the three plastic tabs on the left side; then, pivot the front bezel as shown to remove the front bezel from the chassis.

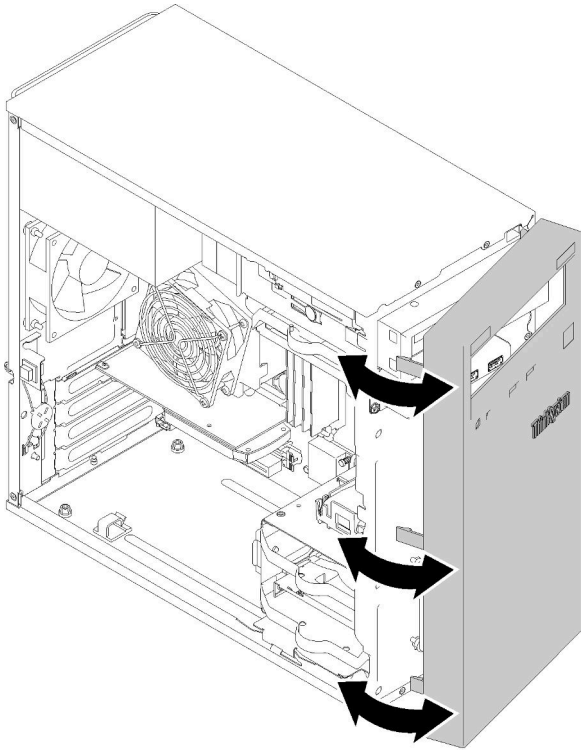

Figure 32. Removing the front bezel

Demo video

Watch the procedure on YouTube

Install a DIMM

Follow this procedure to install a DIMM.

See "DIMM installation rules" on page 37 for detailed information about memory configuration and setup.

	"**Read** the installation Guidelines" on page 35	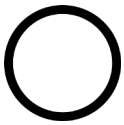 "**Power off** the server for this task" on page 61	"**ATTENTION: Static Sensitive Device** Ground package before opening" on page 37

S002

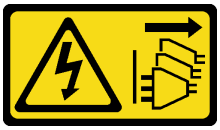

CAUTION:
The power-control button on the device and the power switch on the power supply do not turn off the electrical current supplied to the device. The device also might have more than one power cord. To remove all electrical current from the device, ensure that all power cords are disconnected from the power source.

Attention: DIMMs are sensitive to static discharge and require special handling. In addition to the standard guidelines for "Handling static-sensitive devices" on page 37:

- Always wear an electrostatic-discharge strap when removing or installing DIMMs. Electrostatic-discharge gloves can also be used.
- Never hold two or more DIMMs together so that they touch. Do not stack DIMMs directly on top of each other during storage.
- Never touch the gold DIMM connector contacts or allow these contacts to touch the outside of the DIMM connector housing.
- Handle DIMMs with care: never bend, twist, or drop a DIMM.

Before installing a DIMM:

1. Touch the static-protective package that contains the new DIMM to any unpainted surface on the outside of the server. Then, take the new DIMM out of the package and place it on a static-protective surface.
2. Ensure that you consider and follow the DIMM installation rules when performing the operation. See "DIMM installation rules" on page 37.

To install a DIMM, complete the following steps:

Step 1. Align the DIMM to the connector on the DIMM slot; then, press the DIMM straight into the slot with even pressure on both ends of the DIMM until the retaining clips snap into the locked position.

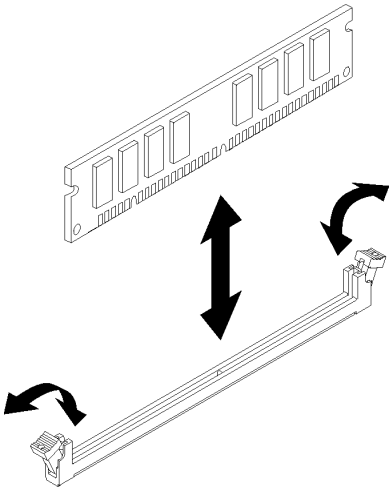

Figure 33. Installing a DIMM

Note: Make sure that the small tabs on the retaining clips engage the notches on the DIMM. If there is a gap between the DIMM and the retaining clips, it indicates that the DIMM has not been properly installed. Remove the DIMM and reinstall it.

Demo video

Watch the procedure on YouTube

Install a simple-swap drive (bay 1-3)

Follow this procedure to install a simple-swap drive.

	"**Read** the installation Guidelines" on page 35	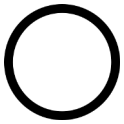 "**Power off** the server for this task" on page 61	"**ATTENTION: Static Sensitive Device** Ground package before opening" on page 37

S002

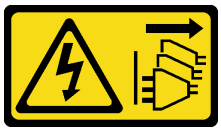

CAUTION:
The power-control button on the device and the power switch on the power supply do not turn off the electrical current supplied to the device. The device also might have more than one power cord. To remove all electrical current from the device, ensure that all power cords are disconnected from the power source.

To install a simple-swap drive, complete the following steps:

Step 1. Prepare the drive to be installed if necessary:

Note: To prevent from damaging the drive with static discharge, do not touch the circuit board on the bottom of the drive.

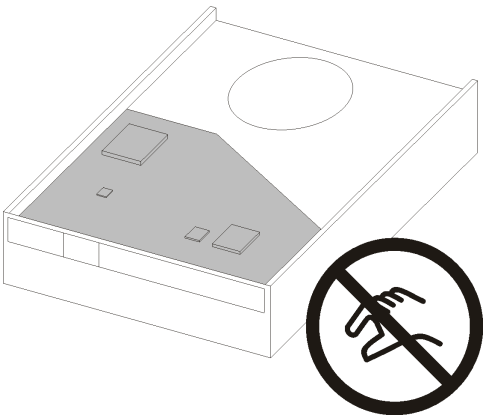

Figure 34. Circuit board on the drive

3.5-inch drive

a. Slightly tear both sides of the retainer apart; then, fit the drive in the retainer.

b. Align the four holes on the drive with the corresponding pins on the retainer, and lower the drive until it is secured in the retainer.

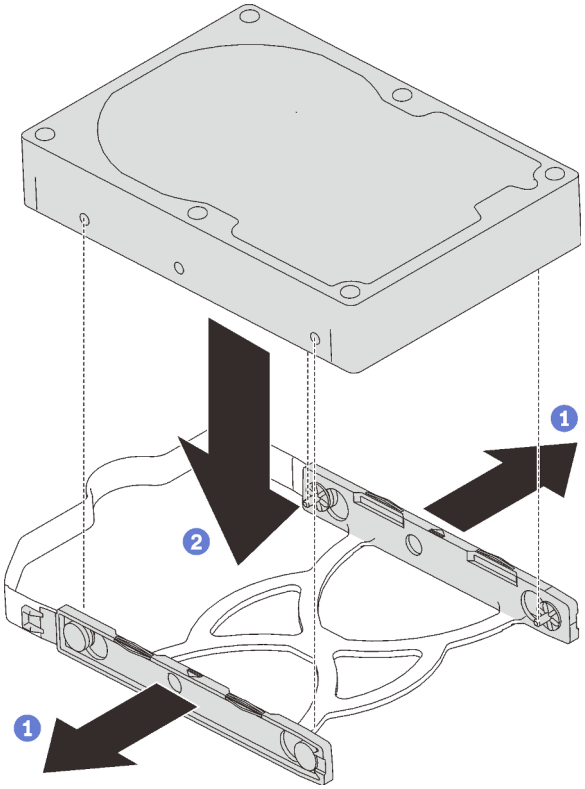

Figure 35. Installing a 3.5-inch drive into the retainer

2.5-inch drive

a. Align the four screw holes on the retainer to those on the drive; then, secure the drive to the adapter with four screws.

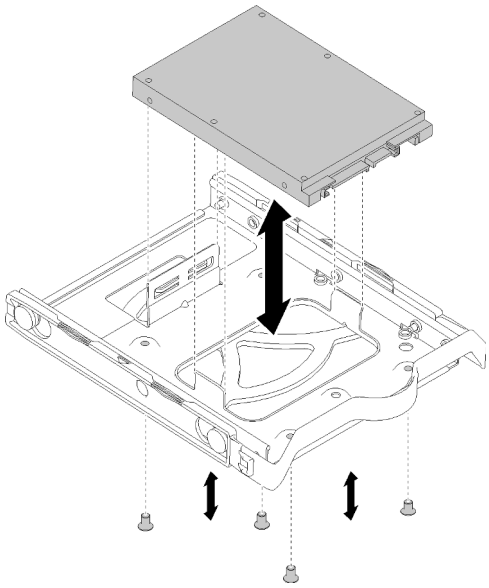

Figure 36. Installing a 2.5-inch drive into the retainer

Step 2. Install the drive assembly based on the drive number:

- Bay 1 and 2

  Face the connectors up, and slide the drive assembly into the drive bay.

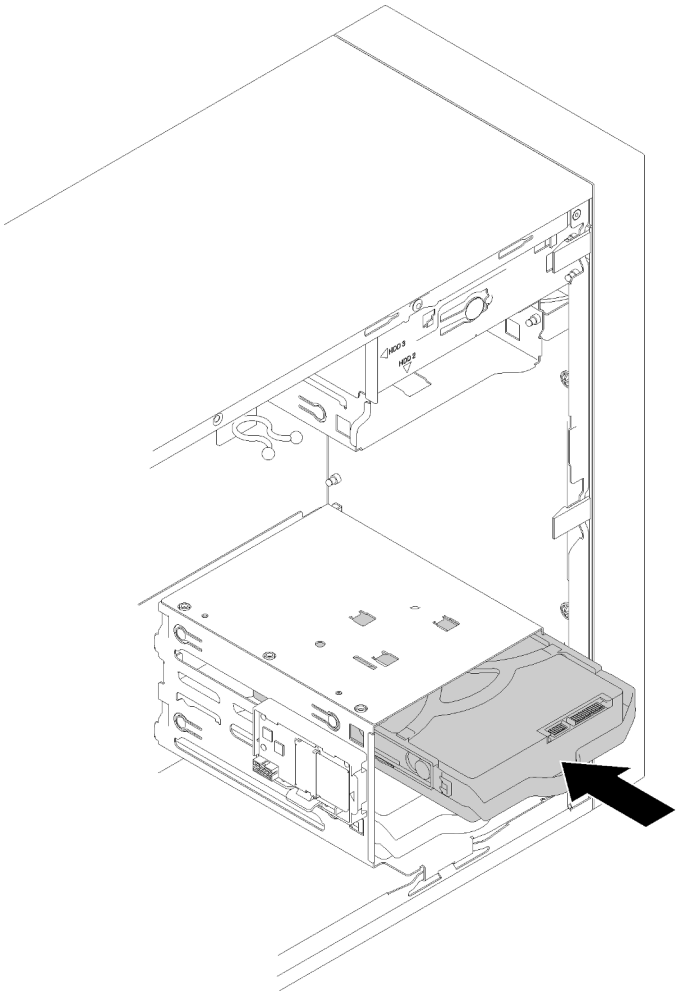

Figure 37. Installing a drive assembly into bay 2

- Bay 3

  Face the connectors down, and slide the drive assembly into the drive bay.

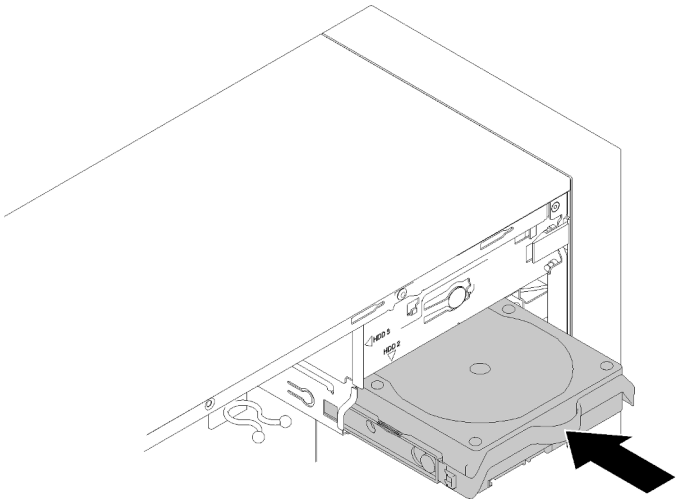

Figure 38. Installing a drive assembly into bay 3

Step 3. Connect the signal and power cable to the system board. See “Cable routing for drive bay 1-3” on page 20 for details.

Demo video

Watch the procedure on YouTube

Install an optical drive or a tape drive

Follow this procedure to install an optical drive or a tape drive.

Note: The retainer required for this procedure is stored on the side of the chassis, see the illustration below for its location. If the retainer is not available, contact Lenovo Support for the miscellaneous kit that includes the retainer.

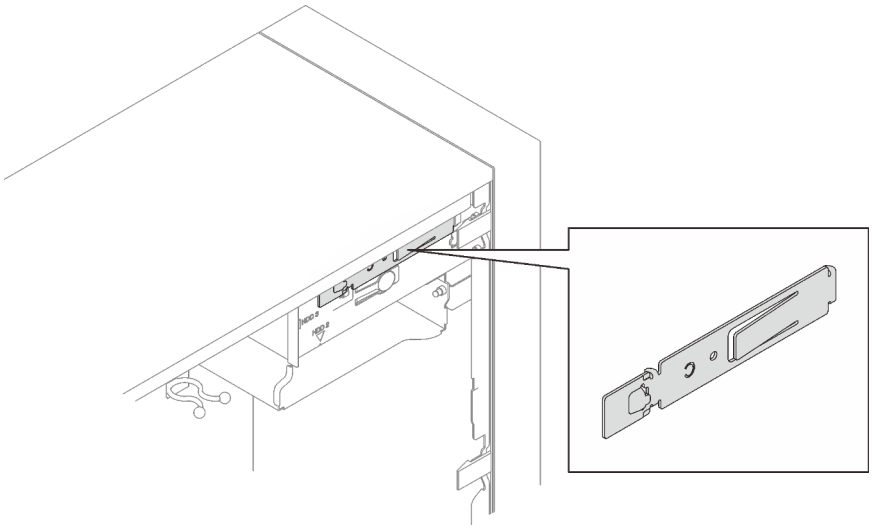

“**Read** the installation Guidelines” on page 35	“**Power off** the server for this task” on page 61	“**ATTENTION: Static Sensitive Device** Ground package before opening” on page 37

S002

CAUTION:
The power-control button on the device and the power switch on the power supply do not turn off the electrical current supplied to the device. The device also might have more than one power cord. To remove all electrical current from the device, ensure that all power cords are disconnected from the power source.

S006

CAUTION:
When laser products (such as CD-ROMs, DVD drives, fiber optic devices, or transmitters) are installed, note the following:

- **Do not remove the covers. Removing the covers of the laser product could result in exposure to hazardous laser radiation. There are no serviceable parts inside the device.**
- **Use of controls or adjustments or performance of procedures other than those specified herein might result in hazardous radiation exposure.**

S007

CAUTION:
This product contains a Class 1M laser. Do not view directly with optical instruments.

S008

DANGER

Some laser products contain an embedded Class 3A or Class 3B laser diode. Note the following: Laser radiation when open. Do not stare into the beam, do not view directly with optical instruments, and avoid direct exposure to the beam.

To install an optical or tape drive, complete the following steps:

Step 1. Align the retainer on the side of the optical or tape drive and install it.

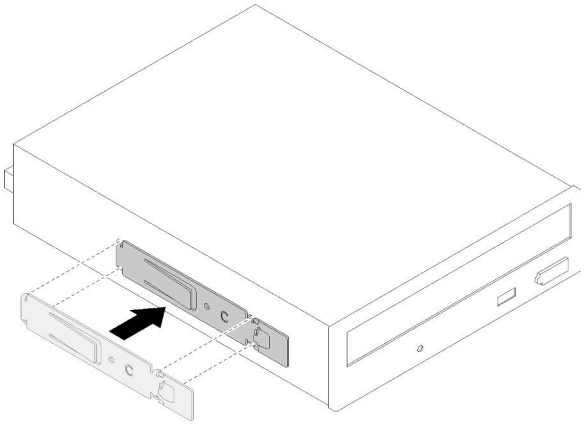

Figure 39. Installing the drive retainer to an optical drive

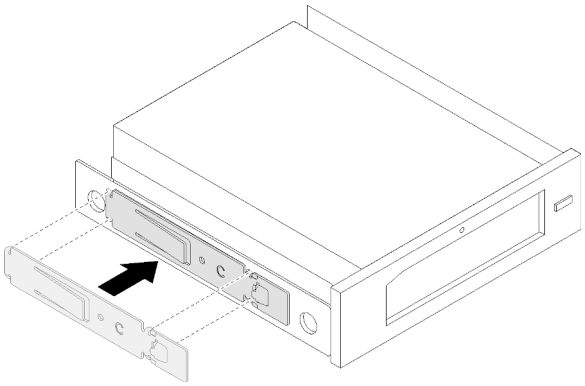

Figure 40. Installing the drive retainer to a tape drive

Step 2. Align the optical or tape drive to the drive bay, and slide it in until it snaps into place.

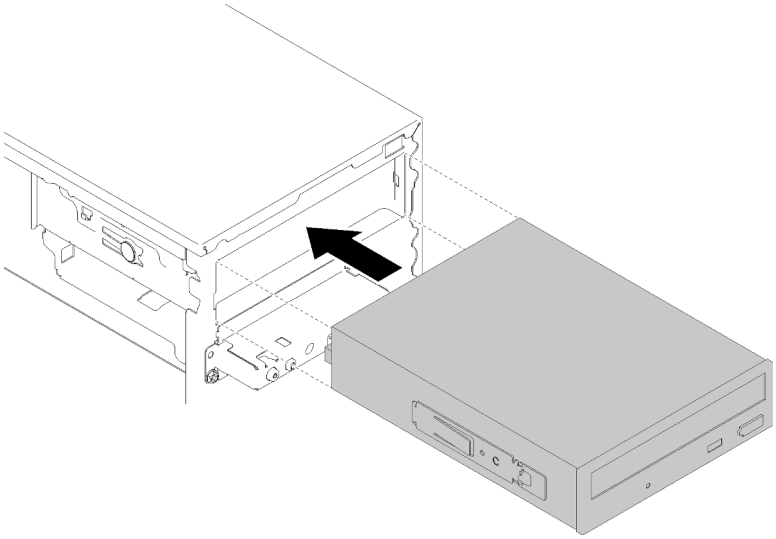

Figure 41. Installing the optical drive assembly

Step 3. Connect the power cable and the signal cable to the system board. For more information about cable routing, see “Cable routing for drive bay 4” on page 22.

Demo video

Watch the procedure on YouTube

Install a 5.25-inch drive bay adapter assembly

Follow this procedure to install an optical drive or a tape drive.

“**Read** the installation Guidelines” on page 35	“**Power off** the server for this task” on page 61	“**ATTENTION: Static Sensitive Device** Ground package before opening” on page 37

S002

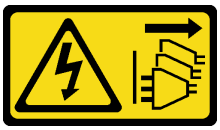

CAUTION:
The power-control button on the device and the power switch on the power supply do not turn off the electrical current supplied to the device. The device also might have more than one power cord. To remove all electrical current from the device, ensure that all power cords are disconnected from the power source.

S006

CAUTION:
When laser products (such as CD-ROMs, DVD drives, fiber optic devices, or transmitters) are installed, note the following:

- **Do not remove the covers. Removing the covers of the laser product could result in exposure to hazardous laser radiation. There are no serviceable parts inside the device.**
- **Use of controls or adjustments or performance of procedures other than those specified herein might result in hazardous radiation exposure.**

S007

CAUTION:
This product contains a Class 1M laser. Do not view directly with optical instruments.

S008

DANGER

Some laser products contain an embedded Class 3A or Class 3B laser diode. Note the following: Laser radiation when open. Do not stare into the beam, do not view directly with optical instruments, and avoid direct exposure to the beam.

To install a 5.25-inch drive bay adapter assembly, complete the following steps:

Step 1. Install the components into the drive bay adapter if necessary:

Slim optical drive

a. Align the screw holes on the retainer to the corresponding ones one the slim optical drive, and secure the retainer with two screws.

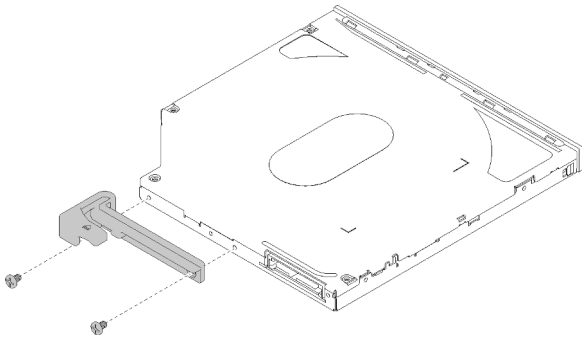

Figure 42. Installing the retainer to the slim optical drive

b. Slide the slim optical drive into the slot on the front of the drive adapter until it snaps into place.

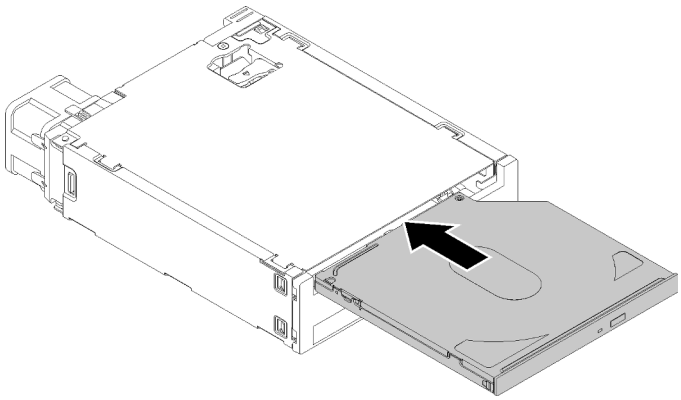

Figure 43. Installing the slim optical drive into the drive bay adapter

Simple-swap drive

a. Pinch the release tab on the rear of the drive assembly as illustrated; then, pivot the latch to the open position.

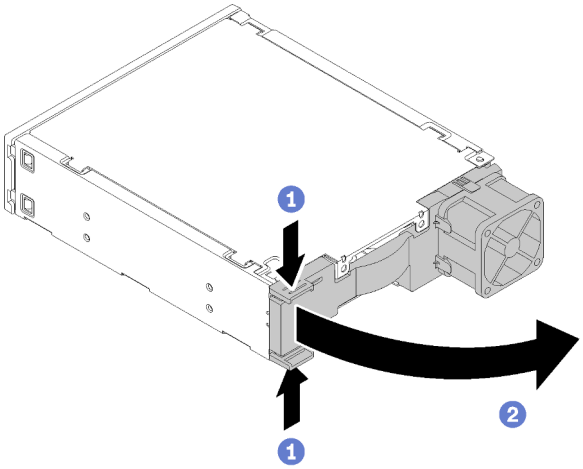

Figure 44. Opening the latch of the adapter assembly

b. Slightly tear both sides of the retainer apart; then, fit the drive in the retainer.

c. Align the four holes on the drive with the corresponding pins on the retainer, and lower the drive until it is secured in the retainer.

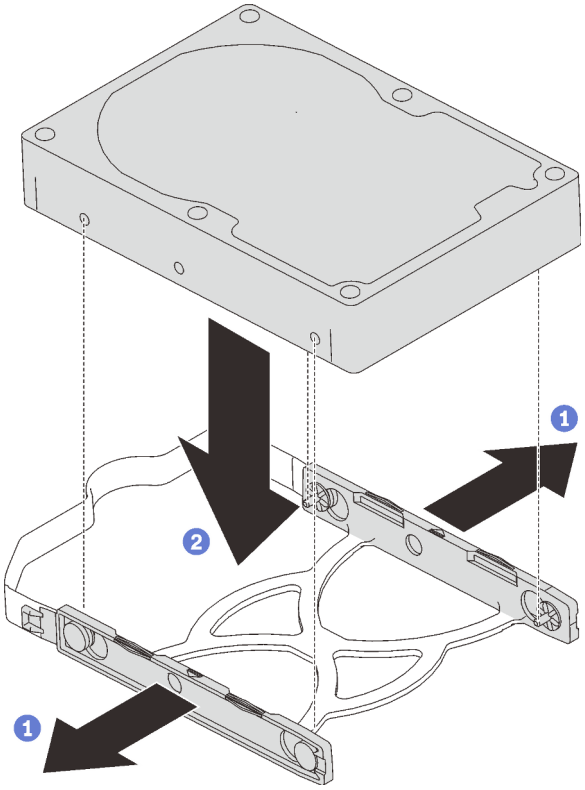

Figure 45. Installing a 3.5-inch drive into the retainer

d. Slide the drive assembly into the drive adapter.

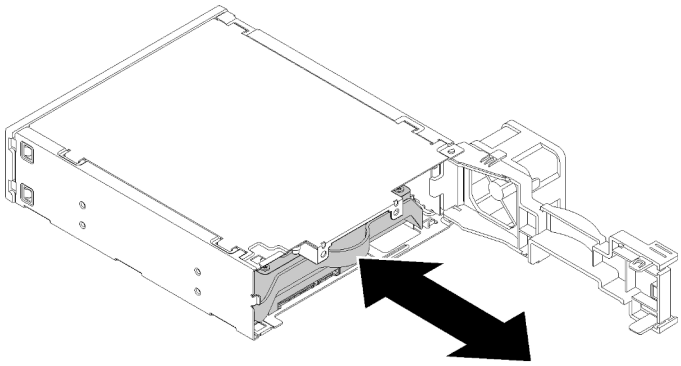

Figure 46. Installing the drive assembly into the drive adapter

e. Close the drive adapter latch.

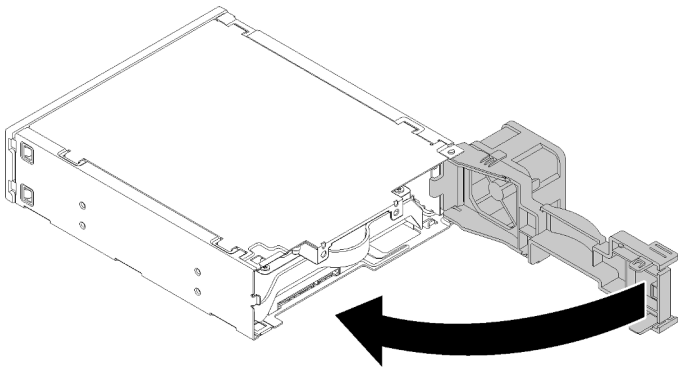

Figure 47. Closing the drive adapter latch

Step 2. Slide the drive bay adapter assembly slide into drive 3 until it clicks into place.

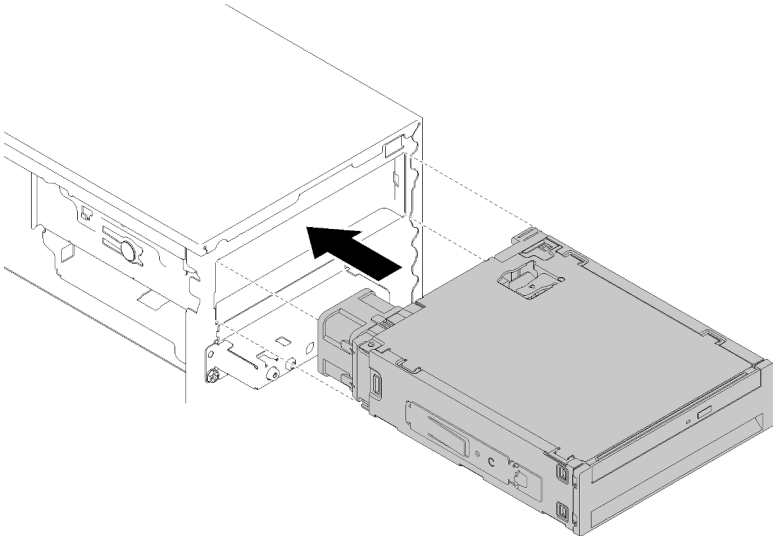

Figure 48. Installing the drive bay adapter assembly

Step 3. Connect the power cable and the signal cable to the system board. For more information about the cable routing, see "Cable routing for drive bay 4" on page 22.

Demo video

Watch the procedure on YouTube

Install a PCIe adapter

Follow this procedure to install a PCIe adapter.

	"**Read** the installation Guidelines" on page 35	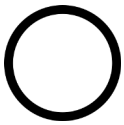 "**Power off** the server for this task" on page 61	"**ATTENTION: Static Sensitive Device** Ground package before opening" on page 37

S002

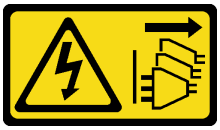

CAUTION:
The power-control button on the device and the power switch on the power supply do not turn off the electrical current supplied to the device. The device also might have more than one power cord. To remove all electrical current from the device, ensure that all power cords are disconnected from the power source.

To install a PCIe adapter, complete the following steps:

Step 1. Locate the applicable PCIe slot. For more information about the PCIe slots, see "Specifications" on page 4.

Step 2. If the retaining clip on the side of the PCIe slot is closed, press on it to open it.

Step 3. Align the PCIe adapter to the slot; then, gently press both ends of the PCIe adapter until it is securely seated in the slot with the retaining clip clicks into the locked position.

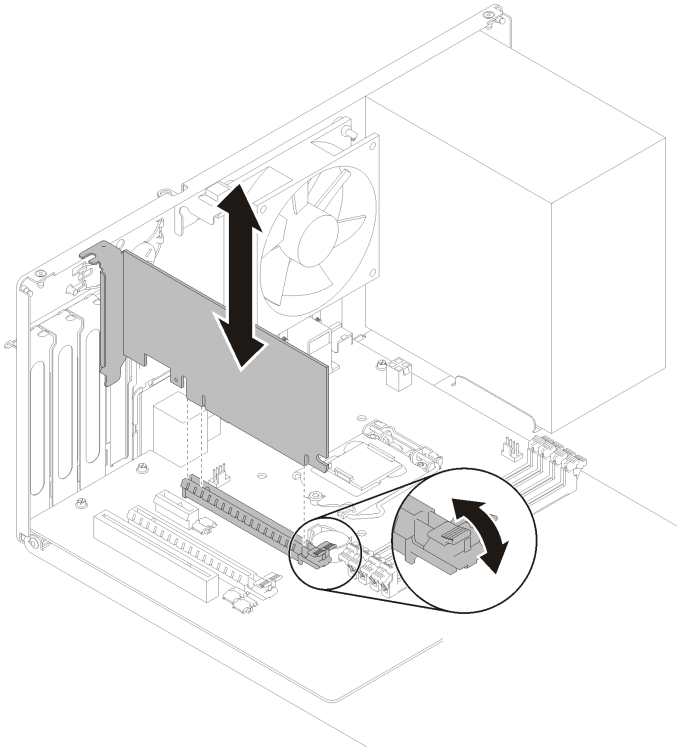

Figure 49. Installing the PCIe adapter

Demo video

Watch the procedure on YouTube

Install the flash power module

Follow this procedure to install the flash power module.

	"**Read** the installation Guidelines" on page 35	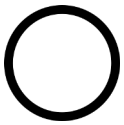 "**Power off** the server for this task" on page 61	"**ATTENTION: Static Sensitive Device** Ground package before opening" on page 37

S002

CAUTION:
The power-control button on the device and the power switch on the power supply do not turn off the electrical current supplied to the device. The device also might have more than one power cord. To remove all electrical current from the device, ensure that all power cords are disconnected from the power source.

To install the flash power module, complete the following steps:

Step 1. Press the release tab, and align the bottom of the flash power module to the slot on the retainer; then, firmly press the flash power module until it snaps in place.

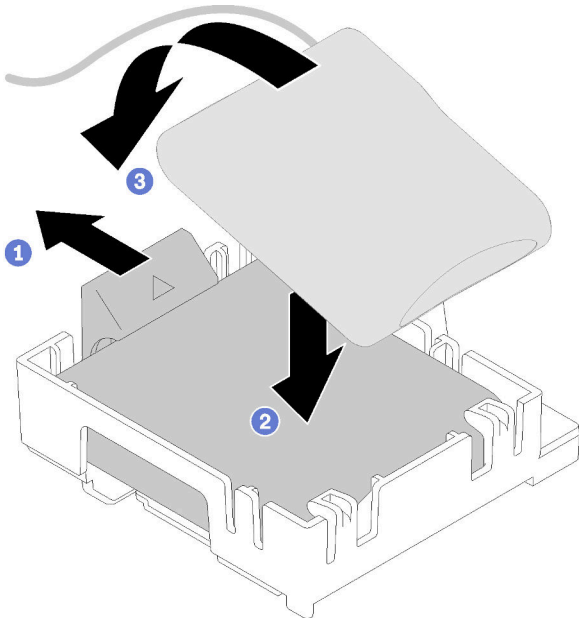

Figure 50. Installing the flash power module into the retainer

Step 2. Align the flash power module assembly with the corresponding holes on the chassis, and slide it forward until it snaps in place.

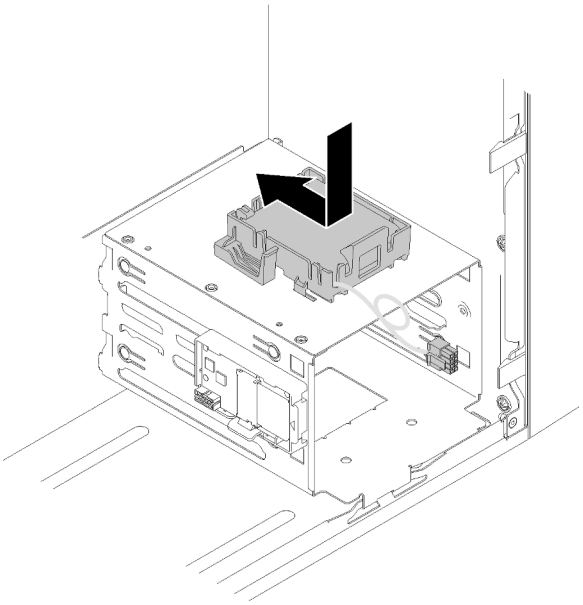

Figure 51. Installing the flash power module assembly

Step 3. Connect the cable to the flash power module adapter and the RAID adapter.

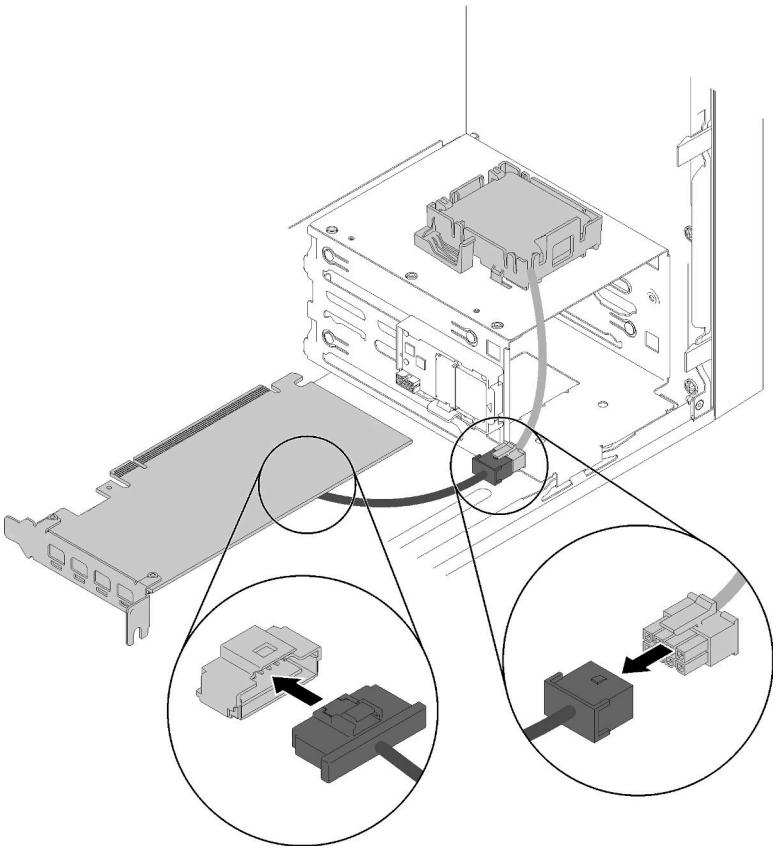

Figure 52. Connecting the flash power module cable

Demo video

Watch the procedure on YouTube

Install the intrusion switch

Follow this procedure to install the intrusion switch.

"**Read** the installation Guidelines" on page 35	"**Power off** the server for this task" on page 61	"**ATTENTION: Static Sensitive Device** Ground package before opening" on page 37

S002

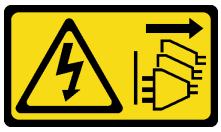

CAUTION:
The power-control button on the device and the power switch on the power supply do not turn off the electrical current supplied to the device. The device also might have more than one power cord. To remove all electrical current from the device, ensure that all power cords are disconnected from the power source.

To install the intrusion switch, complete the following steps:

Step 1. Align the intrusion switch to the chassis as illustrated; then, secure it with a screw.

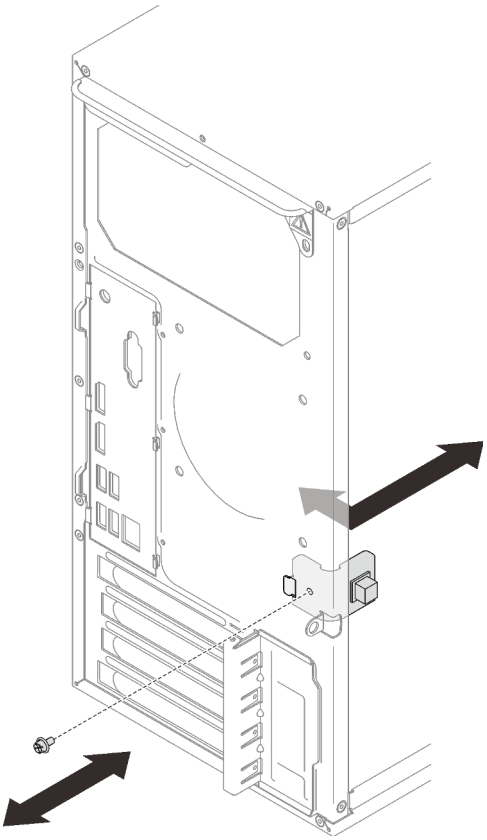

Figure 53. Installing the intrusion switch

Step 2. Connect the intrusion switch cable to the system board. To locate the connector on the system board, see "System board components" on page 15.

Demo video

Watch the procedure on YouTube

Install the server cover

Follow this procedure to install the server cover.

"**Read** the installation Guidelines" on page 35	"**Power off** the server for this task" on page 61	"**ATTENTION: Static Sensitive Device** Ground package before opening" on page 37

S002

CAUTION:
The power-control button on the device and the power switch on the power supply do not turn off the electrical current supplied to the device. The device also might have more than one power cord. To remove all electrical current from the device, ensure that all power cords are disconnected from the power source.

S014

CAUTION:
Hazardous voltage, current, and energy levels might be present. Only a qualified service technician is authorized to remove the covers where the label is attached.

S033

CAUTION:
Hazardous energy present. Voltages with hazardous energy might cause heating when shorted with metal, which might result in spattered metal, burns, or both.

Before installing the server cover:

1. Ensure that all adapters and other components are installed and seated correctly and that you have not left loose tools or parts inside the server.
2. Ensure that all internal cables are correctly routed. See "Internal cable routing" on page 19.

To install the server cover, complete the following steps:

Step 1. Align the server cover to the slots on the side of the chassis, and slide it towards the front of the chassis until it snaps in place.

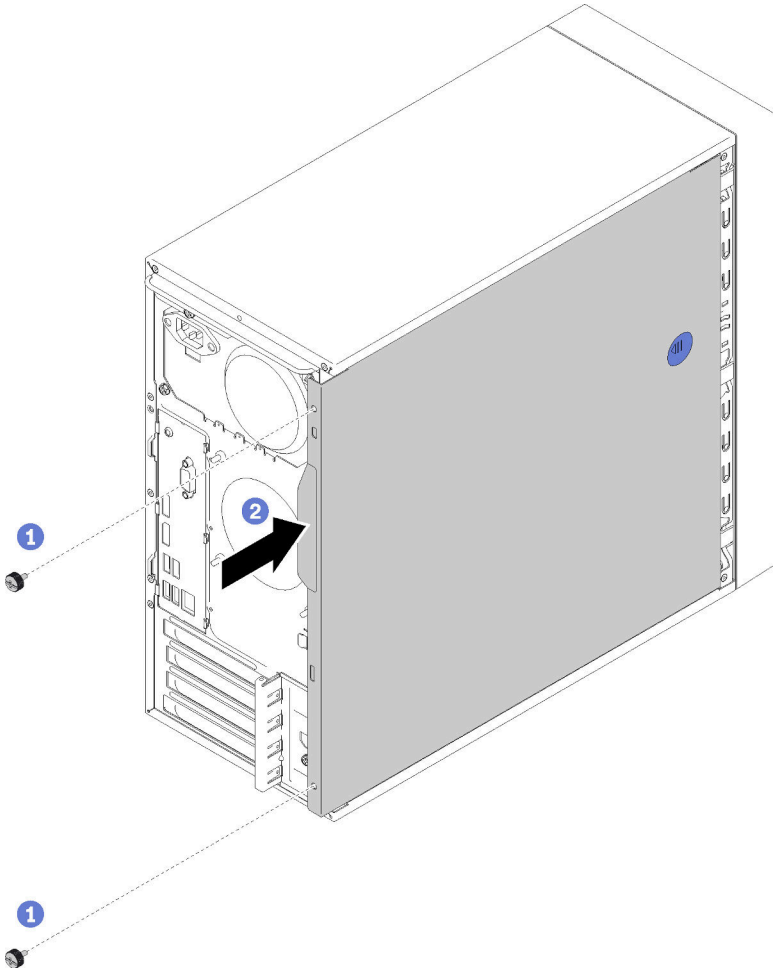

Figure 54. Installing the server cover

Note: Before sliding the cover in, ensure that all the tabs on the cover align to the slots and engage the chassis properly.

Step 2. Secure the cover to the chassis with two screws.

Demo video

Watch the procedure on YouTube

Cable the server

Attach all external cables to the server. Typically, you will need to connect the server to a power source, to the data network, and to storage. In addition, you will need to connect the server to the management network.

Connect to power

Connect the server to power.

Connect to the network

Connect the server to the network.

Connect to storage

Connect the server to any storage devices.

Power on the server

The server can be turned on (power LED on) in any of the following ways:

- Press the power button. Before the operating system starts running, you can press **Enter** to enter **Startup Interrupt Menu**. In this menu, a few options are available for various purposes:
  - Press **Esc** to resume to normal startup.
  - Press **F1** to enter the **Setup Utility**.
  - Press **F10** to diagnose hardware.
  - Press **F12** to choose a temporary startup device.
  - Press **Ctrl** + **P** to enter the Management Engine setup screen or initiate a remote connection.
  - Press **Enter** to pause.
- The server can restart automatically after a power interruption.

Note: If the boot screen lingers with the message of “System Security - The system has been tempered with,” it means the server cover is not properly installed. Remove and reinstall it (see “Server cover replacement” in *Maintenance Manual*); then, restart the server.

For information about powering off the server, see “Power off the server” on page 61.

Validate server setup

After powering up the server, make sure that the LEDs are lit and that they are green.

Power off the server

The server remains in a standby state when it is connected to a power source. To remove all power from the server (power-on LED off), you must disconnect all power cables.

To place the server in a standby state (power-on LED flashes once per second):

- Start an orderly shutdown using the operating system (if supported by your operating system).
- Press the power-on button to start an orderly shutdown (if supported by your operating system).
- Press and hold the power button for more than 4 seconds to force a shutdown.

Chapter 4. System configuration

Complete these procedures to configure your system.

Note: Some Lenovo systems management applications, including XClarity Administrator, XClarity Controller, XClarity Energy Manager, and XClarity Essentials, are not supported by ST50.

Update the firmware

Go to Lenovo Datacenter Support site for the latest firmware update package.

To update the firmware from a flash device, complete the following steps:

1. Go to https://datacentersupport.lenovo.com/products/servers/thinksystem/st50/7y48/downloads. All the downloadable firmware packages for ST50 are available on this site.
2. Download the latest version of firmware update packages.
3. Follow the instructions enclosed in the package to update the firmware.

Note: Perform the firmware update in operating system accordingly to the instructions.

Configure the firmware

Read this section to learn about how to set up the firmware for the server.

Starting the Setup Utility program

Follow this procedure to install the front bezel.

To start the Setup Utility program, complete the following steps:

Step 1. Power on or restart the server.

Step 2. Before the operating system starts up, repeatedly press and release **F1**. It will lead to the text-based BIOS interface.

Note: If a BIOS password has been set, the Setup Utility program will not open until you enter the correct password.

Changing the display language of the Setup Utility program

The Setup Utility program supports three display languages: English, French, and simplified Chinese.

Step 1. Start the Setup Utility program (see "Starting the Setup Utility program" on page 63).

Step 2. From the main interface, locate **System Language** and press **Enter**.

Step 3. Select the display language.

Enabling or disabling a device

This section provides information about how to enable or disable hardware devices, such as USB connectors or storage drives.

To enable or disable a device, complete the following steps:

© Copyright Lenovo 2018, 2024

Step 1. Start the Setup Utility program (see "Starting the Setup Utility program" on page 63).

Step 2. Select **Devices**.

Step 3. Select the device to enable or disable, and press **Enter**.

Step 4. Select the desired setting, and press **Enter**

Step 5. To save settings and exit the Setup Utility program, press **F10**; then, select **Yes** in the displayed window, and press **Enter**.

Enabling or disabling the automatic power-on

Automatic Power On in Setup Utility program provides various power-on options.

To enable or disable Automatic Power On, complete the following steps:

Step 1. Start the Setup Utility program (see "Starting the Setup Utility program" on page 63).

Step 2. Select **Power → Enhanced Power Saving Mode** and press **Enter**.

Step 3. Select the feature you want to enable or disable, and press **Enter**.

Step 4. Select the desired option, and press **Enter**.

Step 5. To save settings and exit the Setup Utility program, press **F10**; then, select **Yes** in the displayed window, and press **Enter**.

Acoustic/Thermal optimal performance

Intelligent Cooling Engine (ICE) Performance Mode menu allows you to adjust server performance to achieve optimal acoustic or thermal conditions.

Note: When **Load Optimal Defaults** is selected, the Intelligent Cooling Engine (ICE) Performance Mode will return to its default settings as **Performance Mode**. Make sure to set the ICE Performance Mode according to your system configuration.

Four modes are available in ICE Performance Mode menu:

- **2HD Cooling Mode:** This mode allows the server to work with less noise at normal thermal level, and applies to the following configuration:
  - Up to two drives
  - Up to two 1G network adapters
  - No RAID adapter
- **4HD Cooling Mode:** This mode allows the server to work at a lower thermal level with normal acoustic performance, and applies to the following configuration:
  - Up to four drives
  - Up to two 1G network adapters
  - One RAID adapter
- **Performance Mode (default):** This mode allows the server to work with good performance without particular acoustic or thermal management, and applies to the following configuration:
  - Up to four drives
  - Up to two 10G network adapters
  - One RAID adapter
- **Full Speed:** This mode allows the server to work with optimal performance. There is no limitation of drive or adapter configuration for this mode, but there will be more acoustic noise.

To switch between better acoustic and thermal performance mode, complete the following steps:

Step 1. Start the Setup Utility program (see "Starting the Setup Utility program" on page 63).

Step 2. Select **Power → Intelligent Cooling Engine (ICE)** and press **Enter**.

Step 3. Select **ICE Performance Mode** and press **Enter**.

Step 4. Select the desired option, and press **Enter**.

Step 5. To save settings and exit the Setup Utility program, press **F10**; then, select **Yes** in the displayed window, and press **Enter**.

Enabling or disabling thermal alert logs (Windows only)

When the ICE thermal alert is enabled, an alert log is generated in the Windows system log when a critical thermal situation occurs. The alert log helps identify thermal problems, such as malfunctioning fans, abnormally high temperature, or poor cooling performances.

To enable or disable thermal alert logs, complete the following steps:

Step 1. Start the Setup Utility program (see "Starting the Setup Utility program" on page 63).

Step 2. Select **Power → Intelligent Cooling Engine (ICE)** and press **Enter**.

Step 3. Select **ICE Thermal Alert** and press **Enter**.

Step 4. Select the desired option, and press **Enter**.

Step 5. To save settings and exit the Setup Utility program, press **F10**; then, select **Yes** in the displayed window, and press **Enter**.

Configuration change detection

With configuration-change detection enabled, an error message is displayed in POST when configuration changes of some hardware devices (such as storage drives or memory modules) are detected.

To enable or disable the configuration change detection, complete the following steps:

Step 1. Start the Setup Utility program (see "Starting the Setup Utility program" on page 63).

Step 2. Select **Security → Configuration Change Detection** and press **Enter**.

Step 3. Select the desired option, and press **Enter**.

Step 4. To save settings and exit the Setup Utility program, press **F10**; then, select **Yes** in the displayed window, and press **Enter**.

To bypass the error message and log in to the operating system, do one of the following:

- Press **F2**.
- Start and exit the Setup Utility program (see "Starting the Setup Utility program" on page 63 and "Exiting the Setup Utility program" on page 68).

Changing BIOS settings before installing a new operating system

BIOS settings vary by operating system. Change BIOS settings before installing a new operating system.

To change BIOS settings, complete the following steps:

Step 1. Start the Setup Utility program (see "Starting the Setup Utility program" on page 63).

Step 2. From the main interface, select **Exit → OS Optimized Default** and press **Enter**.

Step 3. Depending on the operating system to be installed, do one of the following:

- To install the Windows client, select **Enabled** and press **Enter**.
- To install an operating system other than Windows , select **Disabled** and press **Enter**.

Step 4. Select **Yes** in the window displayed and press **Enter** to confirm the selection.

Step 5. To save settings and exit the Setup Utility program, press **F10**; then, select **Yes** in the displayed window, and press **Enter**.

Using passwords

Passwords can be set to prevent unauthorized access to the server.

Despite passwords enhance data security, they are not required. Read the following topics if you decide to set any passwords.

To start the Setup Utility program, complete the following steps:

Password Types

The following types of passwords are available in the Setup Utility program:

- Power-on password

  When a power-on password is set, you are prompted to enter a valid password each time the server is turned on. The server cannot be used until the valid password is entered.

- Administrator password

  Setting an administrator password deters unauthorized users from changing configuration settings. If you are responsible for maintaining the configuration settings of several servers, you might want to set an administrator password.

  When an administrator password is set, you are prompted to enter a valid password each time you try to access the Setup Utility program. The Setup Utility program cannot be accessed until a valid password is entered.

  If both the power-on password and administrator password are set, you can enter either password. However, you must use your administrator password to change any configuration settings.

- Hard disk password

  Setting a hard disk password prevents unauthorized access to the data on the internal storage drive (such as a hard disk drive). When a hard disk password is set, you are prompted to enter a valid password each time you try to access the storage drive.

Notes:

- Even if the storage drive is removed from one server and installed in another, the hard-disk password is still valid.
- If the hard disk password is forgotten, there is no way to reset the password or recover data from the storage drive.

Password considerations

A password can be any combination of up to 64 alphabetic and numeric characters. For security reasons, it is recommended to use a strong password that cannot be easily compromised.

Note: The Setup Utility program passwords are case-sensitive.

To set a strong password, consider the following guidelines:

- Have at least eight characters in length
- Contain at least one alphabetic character and one numeric character
- Not be your name or your user name
- Not be a common word or a common name
- Be significantly different from your previous passwords

Setting, changing, or deleting a password

To set, change, or delete a password, complete the following steps:

Step 1. Start the Setup Utility program (see "Starting the Setup Utility program" on page 63).

Step 2. Select **Security**.

Step 3. Depending on the password type, select **Set Power-On Password**, **Set Administrator Password**, or **Set Hard Disk Password** and press **Enter**.

Step 4. Follow the instructions on the right side of the screen to set, change, or delete a password.

Note: A password can be any combination of up to 64 alphabetic and numeric characters. For more information, see Password considerations.

Step 5. To save settings and exit the Setup Utility program, press **F10**; then, select **Yes** in the displayed window, and press **Enter**.

Erasing lost or forgotten passwords (clearing CMOS)

Note: The instructions in this section do not apply to the hard disk password.

To erase a lost or forgotten password, complete the following steps:

Step 1. Remove any media from the drives and turn off all connected devices and the server; then, disconnect all power cords from electrical outlets and disconnect all cables that are connected to the server.

Step 2. Remove the server cover (see "Remove the server cover" on page 39).

Step 3. Locate the clear CMOS jumper on the system board (see "System board jumpers" on page 15).

Step 4. Move the jumper from the standard position (pin 1 and 2) to the maintenance position (pin 2 and 3).

Step 5. Reinstall the server cover and connect the power cord (see "Install the server cover" on page 58).

Step 6. Turn on the server and leave it on for approximately ten seconds; then, hold the power button for approximately five seconds to turn it off.

Step 7. Repeat and step 2

Step 8. Move the Clear CMOS /Recovery jumper back to the standard position (pin 1 and pin 2).

Step 9. Reinstall the server cover and connect the power cord.

Step 10. To save settings and exit the Setup Utility program, press **F10**; then, select **Yes** in the displayed window, and press **Enter**.

Selecting a startup device

If the server does not start up from the expected device, you can either change the startup device sequence or select a temporary startup device.

Changing the startup device sequence permanently

To change the startup device sequence permanently, complete the following steps:

Step 1. Depending on the type of the storage device, do one of the following:

- If the storage device is internal, skip to Step 2 the next step on page 68.
- If the storage device is a disc, ensure that your server is turned on. Then, insert the disc into the optical drive.
- If the storage device is an external device other than a disc, connect the storage device to the server.

Step 2. Start the Setup Utility program (see "Starting the Setup Utility program" on page 63).

Step 3. Select **Startup**.

Step 4. Follow the instructions on the right side of the screen to change the startup device sequence.

Step 5. To save settings and exit the Setup Utility program, press **F10**; then, select **Yes** in the displayed window, and press **Enter**.

Selecting a temporary startup device

Note: Not all discs and storage drives are applicable as startup device.

To select a temporary startup device, complete the following steps:

Step 1. Depending on the type of the storage device, do one of the following:

- If the storage device is internal, skip to Step 2 the next step on page 68.
- If the storage device is a disc, ensure that your server is turned on. Then, insert the disc into the optical drive.
- If the storage device is an external device other than a disc, connect the storage device to the server.

Step 2. Turn on or restart the server. Before the operating system starts up, repeatedly press and release **F12** until Startup Device Menu is displayed.

Step 3. Select the desired storage device and press **Enter**. The server will start up from the selected device.

Exiting the Setup Utility program

Follow this procedure to exit the Setup Utility program.

To exiting the Setup Utility program, do one the following steps:

- To save the new settings, press **F10**; then, select **Yes** in the displayed window, and press **Enter**.
- If you do not want to save the new settings, select **Exit → Discard Changes and Exit** and press **Enter**; then, select **Yes** in the displayed window, and press **Enter**.

Memory configuration

Memory performance depends on several variables, such as memory mode, memory speed, memory ranks, memory population and processor.

More information about optimizing memory performance and configuring memory is available at the Lenovo Press website:

https://lenovopress.com/servers/options/memory

In addition, you can take advantage of a memory configurator, which is available at the following site:

https://dcsc.lenovo.com/#/memory_configuration

For specific information about the required installation order of memory modules in your server based on the system configuration and memory mode that you are implementing, see “DIMM installation rules” on page 37.

RAID configuration

Using a Redundant Array of Independent Disks (RAID) to store data remains one of the most common and cost-efficient methods to increase server's storage performance, availability, and capacity.

RAID increases performance by allowing multiple drives to process I/O requests simultaneously. RAID can also prevent data loss in case of a drive failure by reconstructing (or rebuilding) the missing data from the failed drive using the data from the remaining drives.

RAID array (also known as RAID drive group) is a group of multiple physical drives that uses a certain common method to distribute data across the drives. A virtual drive (also known as virtual disk or logical drive) is a partition in the drive group that is made up of contiguous data segments on the drives. Virtual drive is presented up to the host operating system as a physical disk that can be partitioned to create OS logical drives or volumes.

An introduction to RAID is available at the following Lenovo Press website:

https://lenovopress.com/lp0578-lenovo-raid-introduction

Detailed information about RAID management tools and resources is available at the following Lenovo Press website:

https://lenovopress.com/lp0579-lenovo-raid-management-tools-and-resources

Deploy the operating system

Tool-based deployment

- **Single-server**
  - Lenovo XClarity Provisioning Manager

    “OS Installation” section in the LXPM documentation compatible with your server at https://pubs.lenovo.com/lxpm-overview/

Manual deployment

If you cannot access the above tools, follow the instructions below, download the corresponding *OS Installation Guide*, and deploy the operating system manually by referring to the guide.

1. Go to https://datacentersupport.lenovo.com/solutions/server-os.
2. Select an operating system from the navigation pane and click **Resources**.
3. Locate the “OS Install Guides” area and click the installation instructions. Then, follow the instructions to complete the operation system deployment task.

Back up the server configuration

After setting up the server or making changes to the configuration, it is a good practice to make a complete backup of the server configuration.

Make sure that you create backups for the following server components:

- **Operating system**

  Use your own operating-system and user-data backup methods to back up the operating system and user data for the server.

Update VPD (Vital Product Data)

VPD (Vital Product Data) must be updated after the system board is replaced.

Step 1. Insert a USB flash drive to the server, and format it.

Step 2. Go to https://datacentersupport.lenovo.com/products/servers/thinksystem/st50/7y48/downloads. Select **Motherboard Devices (core chipset, onboard video, PCIe switches)**, and download `The uEFI VPD SMBIOS Information Update Utility`.

Step 3. Copy and paste the folder that is named `efi` and `amideefix64.efi` to the root folder of the USB flash drive. Make sure the path to `bootX64.efi` is `FS0:\efi\boot\bootX64.efi`.

Step 4. Restart the system. Before the operating system starts up, press **F1** to enter the Setup Utility. Go to **Security → Secure Boot**, and disable the option.

Step 5. Go to **Startup → CSM**, and disable the option.

Step 6. Restart the system. Before the operating system starts up, repeatedly press and release **F12** until Startup Device Menu is displayed; then, select the USB flash drive and press **Enter**. The server will start up from the USB flash rive.

Step 7. Update VPD SMBIOS with the following AMIBIOS DMI Editor commands:

```
AMIDEEFIx64.efi [option1] [option2] ... [optionX]
```

Options:

`/SP "String"`	Update the System Machine Type and Model Number. Example: `fs0:\..\amideefix64.efi /sp "7Y48CTO1WW"`
`/SS "String"`	Update the System Serial Number. Example: `fs0:\..\amideefix64.efi /ss "J300ST50"`
`/SU "String"`	Update the System UUID. Example, if UUID on Label is B6**75**DF**80**-DE**7C**-11**E9**-B0E2-60BBE2EF7200: `fs0:\..\amideefix64.efi /su "80DF75B67CDEE911B0E260BBE2EF7200"`
`/SV "String"`	Update the System Brand ID. Example: `fs0:\..\amideefix64.efi /sv "ThinkSystem ST50"`

Step 8. After the VPD SMBIOS update is completed, remove the USB flash drive, and press **ALT** + **CTRL** + **DEL** to restart the system.

Step 9. Before the operating system starts up, press **F1** to enter the Setup Utility. Go to **Main → System Summary** to make sure VPD has been properly updated.

Chapter 5. Resolving installation issues

Follow this procedure to resolve issues that you might have when setting up your system.

Use the information in this section to diagnose and resolve problems that you might encounter during the initial installation and setup of your server.

- "The server does not power on" on page 71
- "The server immediately displays the POST Event Viewer when it is turned on" on page 71
- "Embedded hypervisor is not in the boot list" on page 71
- "Server cannot recognize a drive" on page 72
- "Displayed system memory less than installed physical memory" on page 72
- "A Lenovo optional device that was just installed does not work." on page 73
- "Voltage planar fault is displayed in the event log" on page 73

The server does not power on

Complete the following steps until the problem is solved.

Note: The power button will not function until approximately one to three minutes after the server is connected to ac power.

1. Remove any optional devices that were installed recently. System power problems caused by addition of a device indicates this device is either incompatible or too much for the power supply to support.
2. Make sure the power cord is securely connected to the server and to a working electrical outlet. Disconnect and reconnect or replace the server power cord.
3. Remove and reinstall the power supply. If the problem persists, replace the power supply.
4. Disconnect and reconnect the front panel cable (see "System board components" on page 15 for the location of the connector on the system board). If the problem persists, replace the front panel.

The server immediately displays the POST Event Viewer when it is turned on

Complete the following steps until the problem is solved.

1. Make sure that the server supports the processor.

   To view processor details, go to **Setup Utility** and select **Main → System Summary**.

   To determine if the processor is supported for the server, see https://serverproven.lenovo.com/.
2. (Trained technician only) Make sure that the processor is installed properly.
3. Replace the following components one at a time, in the order shown, and restart the server after each replacement.
   a. (Trained technician only) processor
   b. (Trained technician only) system board

Embedded hypervisor is not in the boot list

Complete the following steps until the problem is solved.

© Copyright Lenovo 2018, 2024

1. If the server has been installed, moved, or serviced recently, or if this is the first time the embedded hypervisor is being used, make sure that the device is connected properly and that there is no physical damage to the connectors.
2. See the documentation that comes with the optional embedded hypervisor device for setup and configuration information.
3. Make sure that software that is installed in the device works on another server to ensure that the device works properly.
4. Check https://serverproven.lenovo.com/ to validate that the embedded hypervisor device is supported by the server.
5. Make sure that the embedded hypervisor device is included in the list of available boot options. To view the list of boot sequences, go to **Setup Utility**, select **Startup → Primary Boot Sequence**.
6. Check http://datacentersupport.lenovo.com for any tech tips (service bulletins) related to the embedded hypervisor and the server.

Server cannot recognize a drive

Complete the following steps until the problem is solved.

1. Check the system event log and resolve any related problems. To view the system event log, go to **Setup Utility** and select **Security → System Event Log → View System Event Log**.
2. Make sure that:
   - The drive is supported by the server (see https://serverproven.lenovo.com/).
   - The drive is properly installed with signal and power cables properly connected.
3. Make sure the drive is enabled. Go to **Setup Utility** and select **Devices → ATA Drive Setup** to see if the drive in question is enabled. If not, enable it.
4. If the server comes with LXPM Lite, go to **Diagnostics → HDD test** to perform diagnostics on the drives. Replace the drive that is displayed as faulty. Otherwise, skip to the next step.
5. Remove the drives until the system reaches minimal drive requirement; then, add one drive and restart the server, and repeat the step if the problem does not recur. If the problem occurs after addition of a drive, replace it.

Displayed system memory less than installed physical memory

Note: Each time you install or remove a DIMM, you must disconnect the server from the power source; then, wait 10 seconds before restarting the server.

Complete the following steps until the problem is solved.

1. Check the system event log and resolve any related problems. To view the system event log, go to **Setup Utility** and select **Security → System Event Log → View System Event Log**.
2. Make sure that:
   - The DIMMs are supported by the server (see https://serverproven.lenovo.com/).
   - The DIMMs are properly installed. Examine if there is any gap between the connector and the DIMM. Remove and install the DIMM if there is any.
3. If the server comes with Lenovo XClarity Provisioning Manager, go to **Diagnostics → Memory test** to perform diagnostics on the DIMMs. Replace the DIMM that is displayed as faulty. Otherwise, skip to the next step.
4. Remove the DIMMs until the system reaches minimal memory requirement; then, add one DIMM and reboot the server, and repeat the step if the problem does not recur. If the problem occurs after addition of a DIMM, replace it.

A Lenovo optional device that was just installed does not work.

Complete the following steps until the problem is solved.

1. Check the system event log and resolve any related problems. To view the system event log, go to **Setup Utility** and select **Security → System Event Log → View System Event Log**.
2. Make sure that:
   - The device is supported by the server (see https://serverproven.lenovo.com/).
   - The latest version of corresponding driver is installed.
   - The device is seated correctly without physical damage on the device or connector.
   - System firmware has been updated to the latest version.
   - You followed the installation instructions that came with the device, and the device is installed properly.
   - You have not loosened any other installed devices or cables.
3. Reseat the device.
4. Replace the device.

Voltage planar fault is displayed in the event log

Complete the following steps until the problem is solved.

1. Revert the system to the minimum configuration. See "Specifications" on page 4 for details.
2. Restart the server.
   - If the system does restart successfully, add the devices that are removed one at a time, and restart the server after each addition until the problem occurs. Replace the device that causes the problem.
   - If the system fails to restart, there might be a problem with the system board. Call Lenovo support.

Appendix A. Getting help and technical assistance

If you need help, service, or technical assistance or just want more information about Lenovo products, you will find a wide variety of sources available from Lenovo to assist you.

On the World Wide Web, up-to-date information about Lenovo systems, optional devices, services, and support are available at:

http://datacentersupport.lenovo.com

Note: IBM is Lenovo's preferred service provider for ThinkSystem.

Before you call

Before you call, there are several steps that you can take to try and solve the problem yourself. If you decide that you do need to call for assistance, gather the information that will be needed by the service technician to more quickly resolve your problem.

Attempt to resolve the problem yourself

You can solve many problems without outside assistance by following the troubleshooting procedures that Lenovo provides in the online help or in the Lenovo product documentation. The Lenovo product documentation also describes the diagnostic tests that you can perform. The documentation for most systems, operating systems, and programs contains troubleshooting procedures and explanations of error messages and error codes. If you suspect a software problem, see the documentation for the operating system or program.

You can find the product documentation for your ThinkSystem products at https://pubs.lenovo.com/

You can take these steps to try to solve the problem yourself:

- Check all cables to make sure that they are connected.
- Check the power switches to make sure that the system and any optional devices are turned on.
- Check for updated software, firmware, and operating-system device drivers for your Lenovo product. The Lenovo Warranty terms and conditions state that you, the owner of the Lenovo product, are responsible for maintaining and updating all software and firmware for the product (unless it is covered by an additional maintenance contract). Your service technician will request that you upgrade your software and firmware if the problem has a documented solution within a software upgrade.
- If you have installed new hardware or software in your environment, check https://serverproven.lenovo.com/ to make sure that the hardware and software are supported by your product.
- Go to http://datacentersupport.lenovo.com and check for information to help you solve the problem.
  - Check the Lenovo forums at https://forums.lenovo.com/t5/Datacenter-Systems/ct-p/sv_eg to see if someone else has encountered a similar problem.

Gathering information needed to call Support

If you require warranty service for your Lenovo product, the service technicians will be able to assist you more efficiently if you prepare the appropriate information before you call. You can also go to http://datacentersupport.lenovo.com/warrantylookup for more information about your product warranty.

Gather the following information to provide to the service technician. This data will help the service technician quickly provide a solution to your problem and ensure that you receive the level of service for which you might have contracted.

© Copyright Lenovo 2018, 2024

- Hardware and Software Maintenance agreement contract numbers, if applicable
- Machine type number (Lenovo 4-digit machine identifier)
- Model number
- Serial number
- Current system UEFI and firmware levels
- Other pertinent information such as error messages and logs

As an alternative to calling Lenovo Support, you can go to https://support.lenovo.com/servicerequest to submit an Electronic Service Request. Submitting an Electronic Service Request will start the process of determining a solution to your problem by making the pertinent information available to the service technicians. The Lenovo service technicians can start working on your solution as soon as you have completed and submitted an Electronic Service Request.

Contacting Support

You can contact Support to obtain help for your issue.

You can receive hardware service through a Lenovo Authorized Service Provider. To locate a service provider authorized by Lenovo to provide warranty service, go to https://datacentersupport.lenovo.com/serviceprovider and use filter searching for different countries. For Lenovo support telephone numbers, see https://datacentersupport.lenovo.com/supportphonelist for your region support details.

Appendix B. Trademarks

Lenovo, the Lenovo logo, and ThinkSystem are trademarks of Lenovo in the United States, other countries, or both.

Intel and Xeon are trademarks of Intel Corporation in the United States, other countries, or both.

Microsoft and Windows are trademarks of the Microsoft group of companies.

Linux is a registered trademark of Linus Torvalds.

Other company, product, or service names may be trademarks or service marks of others.

© Copyright Lenovo 2018, 2024

Index

A

acoustic 64
automatic log 65
automatic power-on 64

B

back up the server configuration 69
bios 63–66

C

cable routing
  fan 29
  front panel 29
  hard-disk drive 20, 29
  optical drive 22
  power supply unit 27
  RAID 24
  simple-swap drive 20
  slim odd 22
  solid-state drive 20, 29
  tape drive 22
  thermal sensor 30
cable the server 60
Common installation issues 71
Configuration - ThinkSystem ST50 63
configuration change detection 65
configure the firmware 63
connectors 18
contamination, particulate and gaseous 8
creating a personalized support web page 75
custom support web page 75

D

devices, static-sensitive
  handling 37
DIMM
  installing 42
DIMM installation rules 37
disable
  device 63
drive activity LED 11
dual SD card adapter module 18

E

enable
  device 63
exit 68

F

features 3
firmware 67
flash power module 19
  installing 55
form factor 3
front bezel
  installing 63, 65
  removing 41
front panel 11
front view 11
front view of the server 11

G

gaseous contamination 8
Getting help 75
guidelines
  options installation 35
  system reliability 37

H

handling static-sensitive devices 37
hardware options
  installing 39
hardware service and support telephone numbers 76
help 75

I

ICE 64
ID label 1
installation
  guidelines 35
installation guidelines 35
installing
  DIMM 42
  flash power module 55
  front bezel 63, 65
  intrusion switch 57
  optical drive 47, 50
  PCIe adapter 54
  server cover 58
  simple-swap drive 43
  super capacity module 55
  tape drive 47, 50
Intelligent Cooling Engine 64
internal cable routing 19
introduction 1
intrusion switch
  installing 57

J

jumper 15

L

language 63

M

memory configuration 68–69

© Copyright Lenovo 2018, 2024

N

network access label 1

O

optical drive
installing 47, 50

P

package contents 2
particulate contamination 8
parts list 30
password 66
PCIe adapter
installing 54
power button 11
power cords 34
power LED 11
power off the server 61
power on the server 61

Q

QR code 1

R

RAID adapter 18
rear view 12
removing
front bezel 41
server cover 39

S

server components 11
server cover
installing 58
removing 39
server setup 35
server setup checklist 35
server, front view 11
service and support
before you call 75
hardware 76
software 76
Setup Utility 63–66, 68
simple-swap drive
installing 43
software service and support telephone numbers 76
Specifications 4
startup device 67
static-sensitive devices
handling 37
support web page, custom 75
system board components 15
System configuration - ThinkSystem ST50 63
system reliability guidelines 37

T

telephone numbers 76
thermal 64–65
trademarks 77

U

uefi 63–66, 68
update the firmware 63
updating
VPD 70
VPD (Vital Product Data) 70
USB connector 11

V

validate server setup 61

W

warranty 1
Windows 65

Part Number: SP47A37811

Printed in China

(1P) P/N: SP47A37811