ThinkSystem ST50 V3
User Guide

Machine Type: 7DF3, 7DF4

Note

Before using this information and the product it supports, be sure to read and understand the safety information and the safety instructions, which are available at:
https://pubs.lenovo.com/safety_documentation/

In addition, be sure that you are familiar with the terms and conditions of the Lenovo warranty for your server, which can be found at:
http://datacentersupport.lenovo.com/warrantylookup

Ninth Edition (November 2025)

© Copyright Lenovo 2024, 2025.

LIMITED AND RESTRICTED RIGHTS NOTICE: If data or software is delivered pursuant to a General Services Administration (GSA) contract, use, reproduction, or disclosure is subject to restrictions set forth in Contract No. GS-35F-05925.

Contents

Contents i

Safety iii

Safety inspection checklist iv

Chapter 1. Introduction 1

Features. 1

Tech Tips 2

Security advisories 2

Specifications 3

Technical specifications. 3

Mechanical specifications 6

Environmental specifications 7

Management options. 10

Chapter 2. Server components 15

Front view 15

Rear view 18

Side view 20

Server locks 21

System-board layout. 23

System-board connectors 23

System-board switches 24

System LEDs and diagnostics display 26

Chapter 3. Parts list 27

Power cords 29

Chapter 4. Unboxing and setup 31

Server package contents 31

Identify the server and access the Lenovo XClarity Controller 31

Server setup checklist 34

Chapter 5. Hardware replacement procedures. 37

Installation Guidelines 37

Safety inspection checklist. 38

System reliability guidelines 39

Working inside the server with the power on . . 39

Handling static-sensitive devices 40

Memory module installation rules and order 41

Power on and power off the server 42

Power on the server 42

Power off the server 43

Server replacement 43

Remove the server from rack 43

Install the server to rack 45

CMOS battery (CR2032) replacement 48

Remove the CMOS battery (CR2032) 49

Install the CMOS battery (CR2032) 50

Drive and drive cage replacement. 52

Drive bay locations. 52

Simple-swap drive and drive cage replacement (bay 0-1) 53

Simple-swap drive and drive cage replacement (bay 2) 66

Simple-swap drive and drive cage replacement (bay 3) 75

Optical drive and drive cage replacement . . . 83

Fan replacement 92

Remove the fan (front and rear) 92

Install the fan (front and rear) 95

Front bezel replacement 97

Remove the front bezel 97

Install the front bezel 98

Heat sink and fan module replacement (trained technician only) 99

Remove the heat sink and fan module (trained technician only) 99

Install the heat sink and fan module (trained technician only) 103

Intrusion switch replacement 105

Remove the intrusion switch 106

Install the intrusion switch 107

M.2 boot adapter replacement 109

Remove the M.2 boot adapter 109

Install the M.2 boot adapter 111

M.2 drive replacement 114

Remove an M.2 drive 114

Adjust the retainer on the M.2 boot adapter 115

Install an M.2 drive 116

Memory module replacement 118

Remove a memory module 118

Install a memory module 121

PCIe adapter replacement. 124

Remove a PCIe adapter 124

Install a PCIe adapter 126

Power supply unit replacement. 128

Remove the power supply unit 128

Install the power supply unit 131

Processor replacement (trained technician only) 134

Remove the processor (trained technician only) 134

© Copyright Lenovo 2024, 2025

Install the processor (trained technician only) . . . 136
System board replacement (trained technician only) . . . 138
Remove the firmware and RoT security module . . . 139
Install the firmware and RoT security module . . . 140
Remove the system board . . . 144
Install the system board . . . 149
Server cover replacement . . . 154
Remove the server cover . . . 154
Install the server cover . . . 157
Complete the parts replacement . . . 159

Chapter 6. Internal cable routing . . . 161
System-board connectors for cable routing . . . 161
Cable routing for drive bay 0 and bay 1 . . . 163
Cable routing for drive bay 2 . . . 164
Cable routing for drive bay 3 . . . 165
Cable routing for optical disk drive . . . 166
Cable routing for the M.2 boot adapter . . . 167
Cable routing for the RAID adapter and drives . . . 168
Cable routing for the power supply unit . . . 171
Cable routing for the front fan and rear fan . . . 172
Cable routing for the heat sink and fan module . . . 173
Cable routing for the intrusion switch . . . 175

Chapter 7. System configuration . . . 177
Set the network connection for the Lenovo XClarity Controller . . . 177
Set USB port for Lenovo XClarity Controller connection . . . 177
Update the firmware . . . 178
Configure the firmware . . . 182
Memory module configuration . . . 183
RAID configuration . . . 183
Deploy the operating system . . . 184
Back up the server configuration . . . 185

Chapter 8. Problem determination . . . 187
Event logs . . . 187
Troubleshooting by LEDs . . . 189
Firmware and RoT security module LEDs . . . 189
System-board LEDs . . . 190
XCC system management port (10/100/1000 Mbps RJ-45) LEDs . . . 193
General problem determination procedures . . . 194
Resolving suspected power problems . . . 195
Resolving suspected Ethernet controller problems . . . 195
Troubleshooting by symptom . . . 196
Intermittent problems . . . 196
Keyboard, mouse, KVM switch or USB-device problems . . . 197
Memory problems . . . 198
Monitor and video problems . . . 200
Network problems . . . 201
Observable problems . . . 202
Optional-device problems . . . 204
Performance problems . . . 206
Power on and power off problems . . . 207
Power problems . . . 208
Serial-device problems . . . 208
Software problems . . . 209
Storage drive problems . . . 209

Appendix A. Hardware disassembling for recycle . . . 211
Disassemble the system board for recycle . . . 211

Appendix B. Getting help and technical assistance . . . 215
Before you call . . . 215
Collecting service data . . . 216
Contacting Support . . . 217

Appendix C. Documents and supports . . . 219
Documents download . . . 219
Support websites . . . 219

Appendix D. Notices . . . 221
Trademarks . . . 222
Important notes . . . 222
Electronic emission notices . . . 222
Taiwan Region BSMI RoHS declaration . . . 223
Taiwan Region import and export contact information . . . 223
China Energy Label (CEL) . . . 223

Safety

Before installing this product, read the Safety Information.

قبل تركيب هذا المنتج، يجب قراءة الملاحظات الآمنية

Antes de instalar este produto, leia as Informações de Segurança.

在安装本产品之前，请仔细阅读 Safety Information （安全信息）。

安裝本產品之前，請先閱讀「安全資訊」。

Prije instalacije ovog produkta obavezno pročitajte Sigurnosne Upute.

Před instalací tohoto produktu si přečtěte příručku bezpečnostních instrukcí.

Læs sikkerhedsforskrifterne, før du installerer dette produkt.

Lees voordat u dit product installeert eerst de veiligheidsvoorschriften.

Ennen kuin asennat tämän tuotteen, lue turvaohjeet kohdasta Safety Information.

Avant d'installer ce produit, lisez les consignes de sécurité.

Vor der Installation dieses Produkts die Sicherheitshinweise lesen.

Πριν εγκαταστήσετε το προϊόν αυτό, διαβάστε τις πληροφορίες ασφάλειας (safety information).

לפני שתתקינו מוצר זה, קראו את הוראות הבטיחות.

A termék telepítése előtt olvassa el a Biztonsági előírásokat!

Prima di installare questo prodotto, leggere le Informazioni sulla Sicurezza.

製品の設置の前に、安全情報をお読みください。

본 제품을 설치하기 전에 안전 정보를 읽으십시오.

Пред да се инсталира овој продукт, прочитајте информацијата за безбедност.

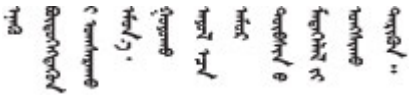

Les sikkerhetsinformasjonen (Safety Information) før du installerer dette produktet.

Przed zainstalowaniem tego produktu, należy zapoznać się z książką "Informacje dotyczące bezpieczeństwa" (Safety Information).

Antes de instalar este produto, leia as Informações sobre Segurança.

© Copyright Lenovo 2024, 2025

Перед установкой продукта прочтите инструкции по технике безопасности.

Pred inštaláciou tohto zariadenia si pečítaje Bezpečnostné predpisy.

Pred namestitvijo tega proizvoda preberite Varnostne informacije.

Antes de instalar este producto, lea la información de seguridad.

Läs säkerhetsinformationen innan du installerar den här produkten.

ཐོན་རྫས་འདི་བདེ་སྤྱོད་མ་བྱས་གོང་། ་སྐོར་གྱི་ཡིད་གཟབ་
བྱ་འདྲ་མིན་ཡོད་པའི་འོད་སྡེར་བལྟ་དགོས།

Bu ürünü kurmadan önce güvenlik bilgilerini okuyun.

مەزكۇر مەھسۇلاتنى ئورنىتىشتىن بۇرۇن بىخەتەرلىك ئۇچۇرلىرىنى ئوقۇپ چىقىڭ.

Youq mwngz yungh canjbinj neix gaxgonq, itdingh aeu doeg aen canjbinj soengq cungj vahgangj ancien siusik.

Safety inspection checklist

Use the information in this section to identify potentially unsafe conditions with your server. As each machine was designed and built, required safety items were installed to protect users and service technicians from injury.

Note: The product is not suitable for use at visual display workplaces according to §2 of the Workplace Regulations.

Note: The set-up of the server is made in the server room only.

CAUTION:
This equipment must be installed or serviced by trained personnel, as defined by the IEC 62368-1, the standard for Safety of Electronic Equipment within the Field of Audio/Video, Information Technology and Communication Technology. Lenovo assumes you are qualified in the servicing of equipment and trained in recognizing hazards energy levels in products. Access to the equipment is by the use of a tool, lock and key, or other means of security, and is controlled by the authority responsible for the location.

Important: Electrical grounding of the server is required for operator safety and correct system function. Proper grounding of the electrical outlet can be verified by a certified electrician.

Use the following checklist to verify that there are no potentially unsafe conditions:

1. Make sure that the power is off and the power cord is disconnected.
2. Check the power cord.
   - Make sure that the third-wire ground connector is in good condition. Use a meter to measure third-wire ground continuity for 0.1 ohm or less between the external ground pin and the frame ground.
   - Make sure that the power cord is the correct type.

     To view the power cords that are available for the server:

     a. Go to:

http://dcsc.lenovo.com/#/

b. Click **Preconfigured Model** or **Configure to order**.

c. Enter the machine type and model for your server to display the configurator page.

d. Click **Power → Power Cables** to see all line cords.

- Make sure that the insulation is not frayed or worn.

3. Check for any obvious non-Lenovo alterations. Use good judgment as to the safety of any non-Lenovo alterations.
4. Check inside the server for any obvious unsafe conditions, such as metal filings, contamination, water or other liquid, or signs of fire or smoke damage.
5. Check for worn, frayed, or pinched cables.
6. Make sure that the power-supply cover fasteners (screws or rivets) have not been removed or tampered with.

© Copyright Lenovo 2024, 2025

Chapter 1. Introduction

The ThinkSystem ST50 V3 server (Types 7DF3 and 7DF4) stands as a robust entry-level server tailored for growing businesses seeking to manage IT infrastructure and business applications. Supporting Intel® Xeon® 6300/E-2400 series or Pentium® processor, DDR5 memory, and PCIe Gen 5, it delivers the necessary performance for handling the IT infrastructure of a remote or home office.

With the compact size and low-decibel noise level, it is ideal for installation outside of a traditional data center. As your business expands, it offers the flexibility to transition into a data center environment seamlessly.

Figure 1. ThinkSystem ST50 V3

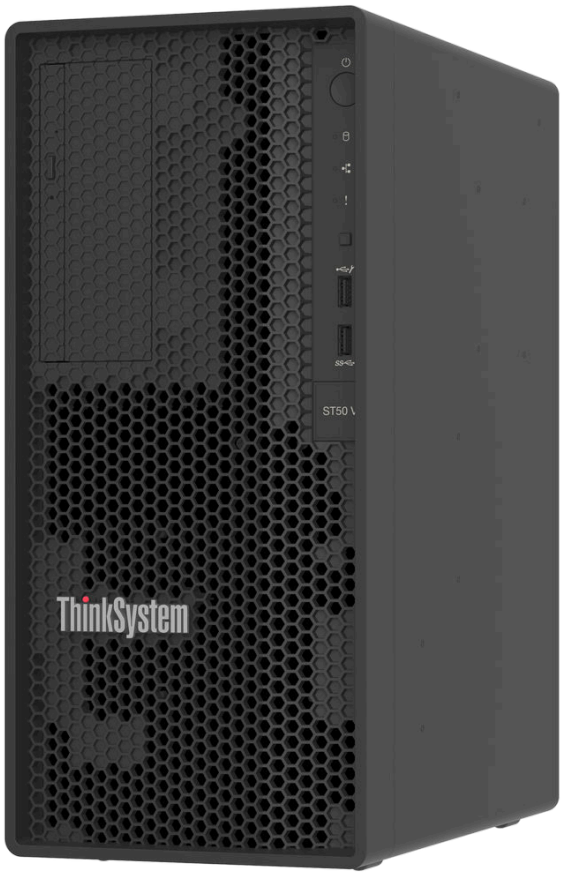

Features

Performance, ease of use, reliability, and expansion capabilities were key considerations in the design of your server. These design features make it possible for you to customize the system hardware to meet your needs today and provide flexible expansion capabilities for the future.

Your server implements the following features and technologies:

- **Lenovo XClarity Controller (XCC)**

© Copyright Lenovo 2024, 2025

The Lenovo XClarity Controller is the common management controller for Lenovo ThinkSystem server hardware. The Lenovo XClarity Controller consolidates multiple management functions in a single chip on the server system board (system board assembly). Some of the features that are unique to the Lenovo XClarity Controller are enhanced performance, higher-resolution remote video, and expanded security options.

The server supports Lenovo XClarity Controller 2 (XCC2). For additional information about Lenovo XClarity Controller 2 (XCC2), refer to https://pubs.lenovo.com/lxcc-overview/.

- **UEFI-compliant server firmware**

  Lenovo ThinkSystem firmware is Unified Extensible Firmware Interface (UEFI) compliant. UEFI replaces BIOS and defines a standard interface between the operating system, platform firmware, and external devices.

  Lenovo ThinkSystem servers are capable of booting UEFI-compliant operating systems, BIOS-based operating systems, and BIOS-based adapters as well as UEFI-compliant adapters.

  Note: The server does not support Disk Operating System (DOS).

- **Large system-memory capacity**

  The server supports error-correcting code unbuffered DIMM (ECC UDIMM). For more information about the specific types and maximum amount of memory, see "Technical specifications" on page 3.

- **Large data-storage capacity and hot-swap capability**

  The server supports a maximum of four drives and one slim SATA optical disk drive.

- **Mobile access to Lenovo Service Information website**

  The server provides a QR code on the cover of the server, that you can scan using a QR code reader and scanner with a mobile device to get quick access to the Lenovo Service Information website. The Lenovo Service Information website provides additional information for parts installation, replacement videos, and error codes for server support.

- **Tremendous durability**

  The system has been verified to run even enterprise workload, 24/7.

Tech Tips

Lenovo continually updates the support website with the latest tips and techniques that you can use to solve issues that your server might encounter. These Tech Tips (also called retain tips or service bulletins) provide procedures to work around issues or solve problems related to the operation of your server.

To find the Tech Tips available for your server:

1. Go to http://datacentersupport.lenovo.com and navigate to the support page for your server.
2. Click on **How To's** from the navigation pane.
3. Click **Article Type → Solution** from the drop-down menu.

   Follow the on-screen instructions to choose the category for the problem that you are having.

Security advisories

Lenovo is committed to developing products and services that adhere to the highest security standards in order to protect our customers and their data. When potential vulnerabilities are reported, it is the responsibility of the Lenovo Product Security Incident Response Team (PSIRT) to investigate and provide information to our customers so they may put mitigation plans in place as we work toward providing solutions.

The list of current advisories is available at the following site:

https://datacentersupport.lenovo.com/product_security/home

Specifications

Summary of the features and specifications of the server. Depending on the model, some features might not be available, or some specifications might not apply.

Refer to the below table for specifications categories and the content of each category.

Specification category	Technical specifications	Mechanical specifications	Environmental specifications
Content	• Processor • Memory • M.2 Drive • Storage expansion • Expansion slots • Integrated functions and I/O connectors • Network • Rear button • RAID adapter • Host bus adapter • System fan • Electrical input • Minimal configuration for debugging • Operating systems	• Dimension • Weight	• Heat output • Acoustical noise emissions • Ambient temperature management • Environmental

Technical specifications

Summary of the technical specifications of server. Depending on the model, some features might not be available, or some specifications might not apply.

Processor
• The server supports one of the following Intel processors: – Xeon E-2400 – Xeon 6300 – Pentium **Note:** Only the Xeon E-2400 processor supports Intel Trusted Execution Technology (Intel TXT) feature. • Designed for LGA 1700 socket • Scalable up to 8 cores per socket • Supports TDP up to 95W For a list of supported processors, see https://serverproven.lenovo.com.

Memory
See "Memory module installation rules and order" on page 41 for detailed information about memory configuration and setup. • Minimum: 16 GB • Maximum: 128 GB • Slots: four DIMM slots (two channels, two DIMMs per channel) • Memory module type: – TruDDR5 4800 MHz UDIMM: 16 GB (1Rx8), 32 GB (2Rx8) – TruDDR5 5600 MHz UDIMM: 16 GB (1Rx8), 32 GB (2Rx8) • Memory operates at up to 4400 MHz, depending on "Memory module installation rules and order" on page 41 . • The 4800 MHz memory modules are only supported with Intel Xeon E-2400 series and Pentium processors. For a list of supported memory modules, see https://serverproven.lenovo.com.

M.2 Drive
The server supports up to two SATA M.2 drives of the following drive form factors: • 42 mm (2242) • 60 mm (2260) • 80 mm (2280) • 110 mm (22110) Supports the following M.2 drive capacity: • 240 GB • 480 GB • 960 GB **Note:** Both the M.2 kit and drive bay 3 occupy PCIe slot 3 and therefore cannot be installed in the same system. For a list of supported M.2 drives, see https://serverproven.lenovo.com.

Storage expansion
The server supports three 3.5-inch drive bays (two for optional), one 2.5-inch drive bay (optional), one ODD bay (optional). • Drive bay 0 – 3.5-inch hard-disk drive or solid-state drive • Drive bay 1 (optional) – 2.5-inch hard-disk drive or solid-state drive • Drive bay 2 (optional) – 3.5-inch hard-disk drive or solid-state drive • Drive bay 3 (optional) – 3.5-inch hard-disk drive or solid-state drive **Note:** Both the M.2 kit and drive bay 3 occupy PCIe slot 3 and therefore cannot be installed in the same system. • ODD drive bay (optional) – One 9mm slim SATA Optical disk drive For a list of supported drives, see https://serverproven.lenovo.com.

Expansion slots
Three PCIe expansion slots are available: • PCIe slot 1: PCIe Gen4 x4, FH/HL, 25W • PCIe slot 2: PCIe Gen5 x16, FH/HL, 75W • PCIe slot 3: PCIe Gen4 x4, FH/HL, 25W **Note:** Slot 1 and Slot 3 in the ST50 V3 are open-end design, which means that the slots can accept adapters with a longer edge connector than the physical length of the slot connector. For example, if a x8 adapter is installed in the x4 slot 3 of the server, half of the edge connector will not be connected to the slot. The adapter will still function, but performance will be impacted.

Integrated functions and I/O connectors
• Lenovo XClarity Controller (XCC), which provides service processor control and monitoring functions, video controller, and remote keyboard, video, mouse, and remote drive capabilities. – The server supports Lenovo XClarity Controller 2 (XCC2). For additional information about Lenovo XClarity Controller 2 (XCC2), refer to https://pubs.lenovo.com/lxcc-overview/. • Front connectors: – One USB 3.2 Gen 1 (5 Gbps) connector – One USB 2.0 connector with XCC mobile support • Rear connectors: – One serial port – One VGA connector – One XCC system management port (10/100/1000 Mbps RJ-45) – Two Ethernet connectors (Ethernet connector 1 shared with Lenovo XClarity Controller network connector) – Four USB 3.2 Gen 1 (5 Gbps) connectors **Note:** The maximum video resolution is 1920 x 1200 at 60 Hz.

Network
• Two 1 Gbps RJ45 Ethernet connectors • One 1 Gbps RJ45 Lenovo XClarity Controller network connector

Rear button
NMI button

RAID adapter
The following options are available for this server. • Hardware RAID (RAID level 0, 1, and 5) – ThinkSystem RAID 5350-8i PCIe 12Gb Adapter – ThinkSystem RAID 545-8i PCIe Gen4 12Gb Adapter • Software RAID (RAID level 0, 1, and 5) – Intel VROC SATA RAID For more information about the RAID/HBA adapters, see Lenovo ThinkSystem RAID Adapter and HBA Reference.

Host bus adapter
• ThinkSystem 4350-8i SAS/SATA 12Gb HBA For more information about the RAID/HBA adapters, see Lenovo ThinkSystem RAID Adapter and HBA Reference.

System fan
The server supports up to three fans: • When processor TDP is lower than 95 watts – One front fan – One rear fan (only when drive bay 2 and/or M.2 kit is installed) – One processor heat sink fan • When processor TDP is 95 watts – One front fan – One processor heat sink fan

Electrical input
The server supports one of the following non-hot-swap, non-redundant power supplies: • Fixed ATX 300-watt Single-Output Gold – Input power 115 Vac or 230 Vac • Fixed ATX 500-watt Multi-Output Platinum – Input power 115 Vac or 230 Vac

Minimal configuration for debugging
• One processor and one processor cooling heat sink • One 16 GB ECC UDIMM in DIMM slot 3 • One power supply • One 3.5-inch SATA drive in drive bay 0 (if OS is needed by debugging) • One system front fan (if debugging is out of chassis)

Operating systems
Supported and certified operating systems: • Microsoft Windows Server • VMware ESXi • Red Hat Enterprise Linux • SUSE Linux Enterprise Server References: • Complete list of available operating systems: https://lenovopress.lenovo.com/osig. • OS deployment instructions, see “Deploy the operating system” on page 184.

Mechanical specifications

Summary of the mechanical specifications of server. Depending on the model, some features might not be available, or some specifications might not apply.

Dimension
4U server • Width: 170 mm (6.7 inches) • Height: – With stands: 376 mm (14.8 inches) – Without stands: 370 mm (14.6 inches) • Depth: 315.4 mm (12.4 inches)

Weight
Net weight: up to 9.5 kg (20.94 lb) depending upon configuration

Environmental specifications

Summary of the environmental specifications of server. Depending on the model, some features might not be available, or some specifications might not apply.

Heat output
Approximate heat output: • Minimum configuration: 354 BTU per hour (104 watts) • Maximum configuration : 1009 BTU per hour (296 watts)

Acoustical noise emissions
The server has the following acoustic noise emissions declaration: • Sound power level (L_{WAd}) – Idling: 3.4 Bel (Typical), 4.0 Bel (Max.) – Operating 1: 3.4 Bel (Typical), 4.0 Bel (Max.) – Operating 2: 4.8 Bel (Typical), 5.4 Bel (Max.) • Sound pressure level (L_{pAm}): – Idling: 20.3 dBA (Typical), 27.6 dBA (Max.) – Operating 1: 20.3 dBA (Typical), 27.6 dBA (Max.) – Operating 2: 35.1 dBA (Typical), 40.6 dBA (Max.) **Notes:** • These sound levels were measured in controlled acoustical environments according to procedures specified by ISO 7779 and are reported in accordance with ISO 9296. Testing was conducted at 23°C ± 2°C to align with ISO7779 procedures. • Idling mode is the steady state in which the server is powered on but not operating any intended function. Operating mode 1 is 50% CPU TDP. Operating mode 2 is 100% CPU TDP. • The declared acoustic sound levels are based on the following configurations, which may change depending on configuration/conditions: – Typical: 1x 80 W CPU, 1x 16 GB DIMM, 1x 3.5" HDD, 1x Slim SATA ODD, 1x 300 W fixed PSU – Maximum: 1x 95 W CPU, 4x 32 GB DIMM, 3x 3.5" HDD, 1x 2.5" SSD, 1x Slim SATA ODD, 1x 5350-8i RAID, 1x 1G NIC, 1x 500 W fixed PSU • Government regulations (such as those prescribed by OSHA or European Community Directives) may govern noise level exposure in the workplace and may apply to you and your server installation. The actual sound pressure levels in your installation depend upon a variety of factors, including the number of racks in the installation; the size, materials, and configuration of the room; the noise levels from other equipment; the room ambient temperature, and employee's location in relation to the equipment. Further, compliance with such government regulations depends on a variety of additional factors, including the duration of employees' exposure and whether employees wear hearing protection. Lenovo recommends that you consult with qualified experts in this field to determine whether you are in compliance with the applicable regulations.

Ambient temperature management
Important: When the ambient temperature is greater than the supported temperature, the server will shut down. The server will not power on again until the ambient temperature falls within the supported temperature range. The ambient temperature must be 35°C or lower if the server has any of the following components: • M.2 drives (960 GB or below)

Environment
ThinkSystem ST50 V3 complies with ASHRAE Class A2 specifications. System performance may be impacted when the operating temperature is outside AHSARE A2 specification. • Air temperature: – Operating – ASHRAE Class A2: 10°C to 35°C (50°F to 95°F); the maximum ambient temperature decreases by 1°C for every 300 m (984 ft) increase in altitude above 900 m (2,953 ft). – Server off: 5°C to 45°C (41°F to 113°F) – Shipment/storage: -20°C to 60°C (-4°F to 140°F) • Maximum altitude: 3,050 m (10,000 ft) • Relative Humidity (non-condensing): – Operating – ASHRAE Class A2: 8% to 80%; maximum dew point: 21°C (70°F) – Shipment/storage: 8% to 90% • Particulate contamination **Attention:** Airborne particulates and reactive gases acting alone or in combination with other environmental factors such as humidity or temperature might pose a risk to the server. For information about the limits for particulates and gases, see "Particulate contamination" on page 9. **Note:** The server is designed for standard data center environment and recommended to be placed in industrial data center.

Particulate contamination

Attention: Airborne particulates (including metal flakes or particles) and reactive gases acting alone or in combination with other environmental factors such as humidity or temperature might pose a risk to the device that is described in this document.

Risks that are posed by the presence of excessive particulate levels or concentrations of harmful gases include damage that might cause the device to malfunction or cease functioning altogether. This specification sets forth limits for particulates and gases that are intended to avoid such damage. The limits must not be viewed or used as definitive limits, because numerous other factors, such as temperature or moisture content of the air, can influence the impact of particulates or environmental corrosives and gaseous contaminant transfer. In the absence of specific limits that are set forth in this document, you must implement practices that maintain particulate and gas levels that are consistent with the protection of human health and safety. If Lenovo determines that the levels of particulates or gases in your environment have caused damage to the device, Lenovo may condition provision of repair or replacement of devices or parts on implementation of appropriate remedial measures to mitigate such environmental contamination. Implementation of such remedial measures is a customer responsibility.

Table 1. Limits for particulates and gases

Contaminant	Limits
Reactive gases	Severity level G1 as per ANSI/ISA 71.04-1985[1]: • The copper reactivity level shall be less than 200 Angstroms per month (Å/month ≈ 0.0035 µg/cm^2-hour weight gain).[2] • The silver reactivity level shall be less than 200 Angstroms per month (Å/month ≈ 0.0035 µg/cm^2-hour weight gain).[3] • The reactive monitoring of gaseous corrosivity must be conducted approximately 5 cm (2 in.) in front of the rack on the air inlet side at one-quarter and three-quarter frame height off the floor or where the air velocity is much higher.
Airborne particulates	Data centers must meet the cleanliness level of ISO 14644-1 class 8. For data centers without airside economizer, the ISO 14644-1 class 8 cleanliness might be met by choosing one of the following filtration methods: • The room air might be continuously filtered with MERV 8 filters. • Air entering a data center might be filtered with MERV 11 or preferably MERV 13 filters. For data centers with airside economizers, the choice of filters to achieve ISO class 8 cleanliness depends on the specific conditions present at that data center. • The deliquescent relative humidity of the particulate contamination should be more than 60% RH.[4] • Data centers must be free of zinc whiskers.[5]

[1] ANSI/ISA-71.04-1985. *Environmental conditions for process measurement and control systems: Airborne contaminants*. Instrument Society of America, Research Triangle Park, North Carolina, U.S.A.

[2] The derivation of the equivalence between the rate of copper corrosion growth in the thickness of the corrosion product in Å/month and the rate of weight gain assumes that Cu_2S and Cu_2O grow in equal proportions.

[3] The derivation of the equivalence between the rate of silver corrosion growth in the thickness of the corrosion product in Å/month and the rate of weight gain assumes that Ag_2S is the only corrosion product.

[4] The deliquescent relative humidity of particulate contamination is the relative humidity at which the dust absorbs enough water to become wet and promote ionic conduction.

[5] Surface debris is randomly collected from 10 areas of the data center on a 1.5 cm diameter disk of sticky electrically conductive tape on a metal stub. If examination of the sticky tape in a scanning electron microscope reveals no zinc whiskers, the data center is considered free of zinc whiskers.

Management options

The XClarity portfolio and other system management options described in this section are available to help you manage the servers more conveniently and efficiently.

Overview

Options	Description
Lenovo XClarity Controller	Baseboard management controller (BMC) Consolidates the service processor functionality, Super I/O, video controller, and remote presence capabilities into a single chip on the server system board (system board assembly). **Interface** • CLI application • Web GUI interface • Mobile application • Redfish API **Usage and downloads** https://pubs.lenovo.com/lxcc-overview/
Lenovo XCC Logger Utility	Application that reports the XCC events to local OS system log. **Interface** • CLI application **Usage and downloads** • https://pubs.lenovo.com/lxcc-logger-linux/ • https://pubs.lenovo.com/lxcc-logger-windows/
Lenovo XClarity Administrator	Centralized interface for multi-server management. **Interface** • Web GUI interface • Mobile application • REST API **Usage and downloads** https://pubs.lenovo.com/lxca/
Lenovo XClarity Essentials toolset	Portable and light toolset for server configuration, data collection, and firmware updates. Suitable both for single-server or multi-server management contexts. **Interface** • **OneCLI**: CLI application • **Bootable Media Creator**: CLI application, GUI application • **UpdateXpress**: GUI application **Usage and downloads** https://pubs.lenovo.com/lxce-overview/

Options	Description
Lenovo XClarity Provisioning Manager	UEFI-based embedded GUI tool on a single server that can simplify management tasks. **Interface** • Web interface (BMC remote access) • GUI application **Usage and downloads** https://pubs.lenovo.com/lxpm-overview/ **Important:** Lenovo XClarity Provisioning Manager (LXPM) supported version varies by product. All versions of Lenovo XClarity Provisioning Manager are referred to as Lenovo XClarity Provisioning Manager and LXPM in this document, unless specified otherwise. To see the LXPM version supported by your server, go to https://pubs.lenovo.com/lxpm-overview/.
Lenovo XClarity Integrator	Series of applications that integrate the management and monitoring functionalities of the Lenovo physical servers with the software used in a certain deployment infrastructure, such as VMware vCenter, Microsoft Admin Center, or Microsoft System Center while delivering additional workload resiliency. **Interface** • GUI application **Usage and downloads** https://pubs.lenovo.com/lxci-overview/
Lenovo XClarity Energy Manager	Application that can manage and monitor server power and temperature. **Interface** • Web GUI Interface **Usage and downloads** https://datacentersupport.lenovo.com/solutions/lnvo-lxem
Lenovo Capacity Planner	Application that supports power consumption planning for a server or rack. **Interface** • Web GUI Interface **Usage and downloads** https://datacentersupport.lenovo.com/solutions/lnvo-lcp

Functions

Options		Functions							
		Multi-system mgmt	**OS deploy-ment**	**System configu-ration**	**Firm-ware up-dates[1]**	**Event-s/alert moni-toring**	**Inven-tory/ logs**	**Pow-er mgmt**	**Power planning**
Lenovo XClarity Controller				√	√[2]	√	√[4]		
Lenovo XCC Logger Utility						√			
Lenovo XClarity Administrator		√	√	√	√[2]	√	√[4]		
Lenovo XClarity Essen-tials toolset	OneCLI	√		√	√[2]	√	√		
	Bootable Media Creator			√	√[2]		√[4]		
	UpdateXpress			√	√[2]				
Lenovo XClarity Provisioning Manager			√	√	√[3]		√[5]		
Lenovo XClarity Integrator		√		√	√	√	√	√[6]	
Lenovo XClarity Energy Manager		√				√		√	
Lenovo Capacity Planner									√[7]

Notes:

1. Most options can be updated through the Lenovo tools. Some options, such as GPU firmware or Omni-Path firmware require the use of supplier tools.
2. The server UEFI settings for option ROM must be set to **Auto** or **UEFI** to update firmware using Lenovo XClarity Administrator, Lenovo XClarity Essentials, or Lenovo XClarity Controller.
3. Firmware updates are limited to Lenovo XClarity Provisioning Manager, Lenovo XClarity Controller, and UEFI updates only. Firmware updates for optional devices, such as adapters, are not supported.
4. The server UEFI settings for option ROM must be set to **Auto** or **UEFI** for detailed adapter card information, such as model name and firmware levels, to be displayed in Lenovo XClarity Administrator, Lenovo XClarity Controller, or Lenovo XClarity Essentials.
5. Limited inventory.
6. Power management function is supported only by Lenovo XClarity Integrator for VMware vCenter.
7. It is highly recommended that you check the power summary data for your server using Lenovo Capacity Planner before purchasing any new parts.

Chapter 2. Server components

This section contains information about each of the components associated with the server.

Front view

This section contains information about the controls, LEDs, and connectors on the front of the server.

Front view of the sever components

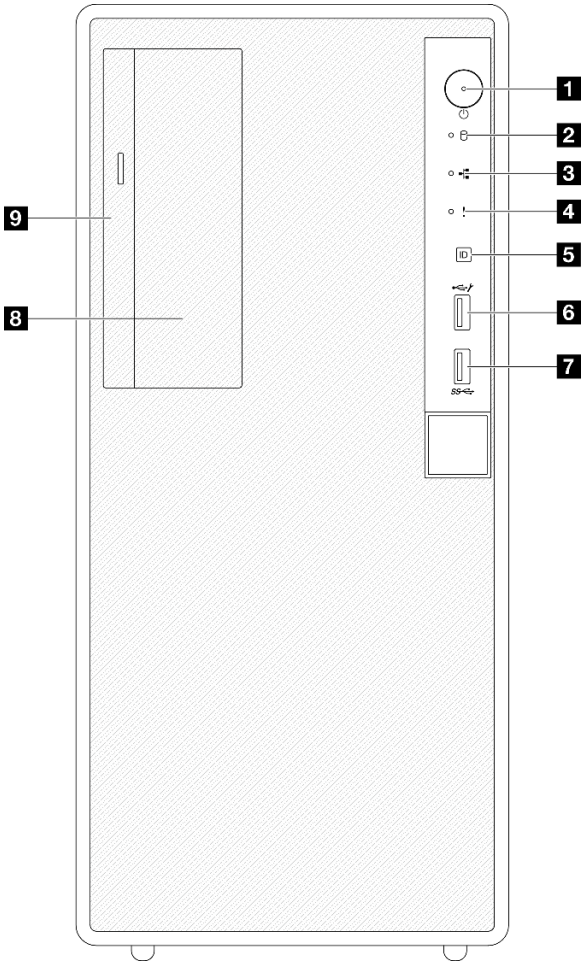

Figure 2. Front view of the sever components

Table 2. Components on the front view

1 Power button/LED (green)	**6** USB 2.0 connector with Lenovo XClarity Controller management
2 Drive activity LED (green) **Note:** For onboard SATA indication only	**7** USB 3.2 Gen 1 (5Gbps) connector
3 Network activity LED (green)	**8** 3.5-inch drive bay

© Copyright Lenovo 2024, 2025

Table 2. Components on the front view (continued)

4 System error LED (yellow)	9 Optical-drive bay
5 System ID button LED (blue)	

1 Power button/LED (green)

Press this button to turn the server on and off manually. The states of the power LED are as follows:

Status	Color	Description
Off	None	Power is not present, or the power supply has failed.
Fast blinking (about four flashes per second)	Green	• The server is off, but the XClarity Controller is initializing, and the server is not ready to be powered on. • System-board-assembly power has failed.
Slow blinking (about one flash per second)	Green	The server is off and is ready to be powered on (standby state).
Solid on	Green	The server is on and running.

2 Drive activity LED (green)

This LED indicates the activity of the drives.

Status	Color	Description
Blinking	Green	The drives are active.
Off	None	The drives are not active.

3 Network Activity LED (green)

The network activity LED helps you identify the network connectivity and activity.

Status	Color	Description
Blinking	Green	The network is connected and active.
Off	None	The server is disconnected from the network.

4 System error LED (yellow)

The system error LED helps you to determine if there are any system errors.

Status	Color	Description	Action
On	Yellow	An error has been detected on the server. Causes might include one or more of the following errors: • The temperature of the server reached the non-critical temperature threshold. • The voltage of the server reached the non-critical voltage threshold. • A fan has been detected to be running at low speed. • The power supply has a critical error. • The power supply is not connected to the power.	Check system logs or internal error LEDs to identify the failed part.
Off	None	The server is off or the server is on and is working correctly.	None.

5 System ID button/LED (blue)

Use this system ID button and the blue system ID LED to visually locate the server. Each time you press the system ID button, the state of the system ID LED changes. The LED can be changed to on, blinking, or off. You can also use the Lenovo XClarity Controller or a remote management program to change the state of the system ID LED to assist in visually locating the server among other servers.

6 USB 2.0 connector with Lenovo XClarity Controller management

Connect a USB 2.0 device, such as a mouse, keyboard, or other devices, to this connector.

Note: This is the only USB port that supports USB automation update of the firmware and RoT security module.

Connection to Lenovo XClarity Controller is primarily intended for users with a mobile device running the Lenovo XClarity Controller mobile application. When a mobile device is connected to this USB port, an Ethernet over USB connection is established between the mobile application running on the device and the Lenovo XClarity Controller.

Select **Network** in **BMC Configuration** to view or modify settings.

Four types of settings are available:

- **Host only mode**

  In this mode, the USB port is always solely connected to the server.
- **BMC only mode**

  In this mode, the USB port is always solely connected to Lenovo XClarity Controller.
- **Shared mode: owned by BMC**

  In this mode, connection to the USB port is shared by the server and Lenovo XClarity Controller, while the port is switched to Lenovo XClarity Controller.
- **Shared mode: owned by host**

  In this mode, connection to the USB port is shared by the server and Lenovo XClarity Controller, while the port is switched to the server.

7 USB 3.2 Gen 1 (5 Gbps) connector

The USB 3.2 Gen 1 (5 Gbps) connector can be used to attach a USB-compatible device, such as a USB keyboard, USB mouse, or USB storage device.

8 3.5-inch drive bay

Depending on the model, the server might come with a 3.5-inch drive installed in this drive bay. See "Install a simple-swap drive (bay 2)" on page 68 for more details.

9 Optical drive bay

Depending on the model, the server might come with an optical drive installed in the optical drive bay. See "Optical drive and drive cage replacement" on page 83 for more details.

Rear view

This section contains information about the important components on the rear of this server.

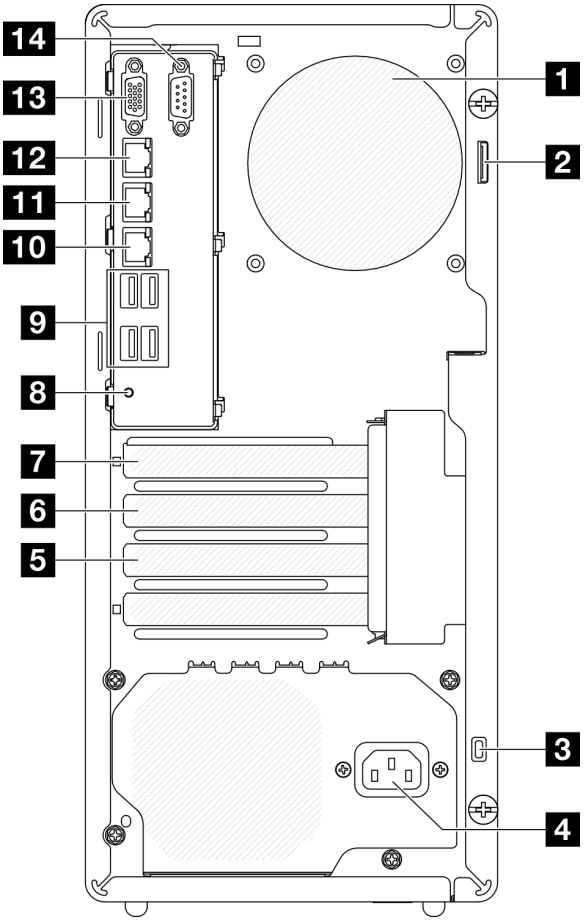

Figure 3. Rear view

1 Rear fan	8 NMI button
2 Padlock loop	9 USB 3.2 Gen 1 (5 Gbps) connectors (total of four connectors)
3 Kensington lock	10 Ethernet connector 2

4 Power cord connector	11 Ethernet connector 1 (shared with XCC network port)
5 PCIe slot 3	12 XCC system management port (10/100/1000 Mbps RJ-45)
6 PCIe slot 2	13 VGA connector
7 PCIe slot 1	14 Serial port

1 Rear fan

Install the rear fan in this space.

2 Padlock loop

This loop is available for installing a padlock. See "Server locks" on page 21 for more information.

3 Kensington lock

This loop is available for installing a Kensington lock. See "Server locks" on page 21 for more information.

4 Power cord connector

Connect the power cord to this component.

5/6/7 PCIe slots

There are three PCIe slots on the system board to install appropriate PCIe adapters. For information about the PCIe slots, see "Specifications" on page 3.

8 NMI button

Press this button to force a nonmaskable interrupt to the processor. You might have to use a pen or the end of a straightened paper clip to press the button. You can also use it to force a blue-screen memory dump. Use this button only when you are directed to do so by Lenovo Support.

9 USB 3.2 Gen 1 (5 Gbps) connectors

There are four USB 3.2 Gen 1 (5 Gbps) connectors on the rear of the server. Connect a USB device, such as a mouse, keyboard, or other devices, to either of these connectors.

10 Ethernet connector 2

Attach an Ethernet cable for LAN. Each Ethernet connector has two status LEDs to help you identify the Ethernet connectivity and activity.

11 Ethernet connector 1 (shared with XCC network port)

Attach an Ethernet cable for LAN. Each Ethernet connector has two status LEDs to help you identify the Ethernet connectivity and activity. If the LOM adapter is not installed, Ethernet connector 1 can be set as Lenovo XClarity Controller Network connector.

To set Ethernet connector 1 as Lenovo XClarity Controller Network connector, start Setup Utility and select **BMC Settings → Network Settings → Network Interface Port : Shared**. Then, click **Shared NIC on** and select **Share OnLom Port:01**.

12 XCC system management port (10/100/1000 Mbps RJ-45)

The server has a 10/100/1000 Mbps RJ-45 connector dedicated to Lenovo XClarity Controller (XCC) functions. Through the system management port, you can access the Lenovo XClarity Controller directly by connecting your laptop to the management port using an Ethernet cable. Make sure that you modify the IP settings on the laptop so that it is on the same network as the server default settings. A dedicated

management network provides additional security by physically separating the management network traffic from the production network.

See the following for more information:

- "Set the network connection for the Lenovo XClarity Controller" on page 177
- "XCC system management port (10/100/1000 Mbps RJ-45) LEDs" on page 193

13 VGA connector

Connect a monitor to this connector.

Note: The maximum video resolution is 1920 x 1200 at 60 Hz.

14 Serial connector

Connect a 9-pin serial device to this connector. The serial port is shared with XCC. XCC can take control of the shared serial port to redirect serial traffic, using Serial over LAN (SOL).

Note: If the Serial over LAN (SOL) or Emergency Management Services (EMS) feature is enabled, the serial port will be hidden on Linux and Microsoft Windows. Therefore, it is required to disable SOL and EMS to use the serial port on operating systems for serial devices.

To enable the serial port module on Linux or Microsoft Windows, see https://support.lenovo.com/hk/en/solutions/ht514908-how-to-enable-the-serial-port-on-thinksystem-st50-st50-v2-st250-st250-v2-sr250-and-sr250-v2-lenovo-thinksystem-sr250-v2-sr250-st250-v2-st250-st50-v2-and-st50.

Side view

Follow the instructions in this section to locate the components from the side of the server.

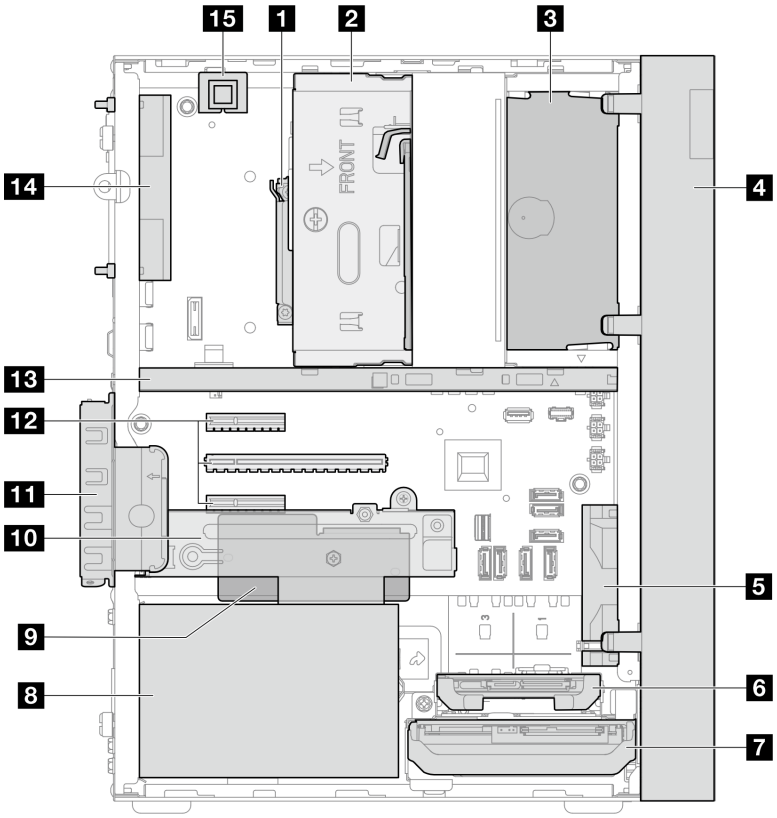

Figure 4. Side view

Table 3. Components on the side view

1 Processor	9 Firmware and RoT security module
2 Drive bay 2 (One 3.5-inch SATA drive)*	10 Drive bay 3 (One 3.5-inch SATA drive)*
3 ODD drive bay (One 9mm slim SATA Optical disk drive) *	11 PCIe adapter retainer
4 Front bezel	12 PCIe slots 1-3
5 Front fan	13 Cage bar
6 Drive bay 1 (One 2.5-inch SATA drive)*	14 Rear system 9225 fan*
7 Drive bay 0 (One 3.5-inch SATA drive)	15 Intrusion switch*
8 Fixed power supply unit	

* Optional components.

Server locks

Locking the server cover prevents unauthorized access to the inside of your server.

Padlock

Your server comes with a padlock loop. When a padlock is installed, the server cover cannot be removed.

Note: It is recommended to purchase your own padlock from a local store.

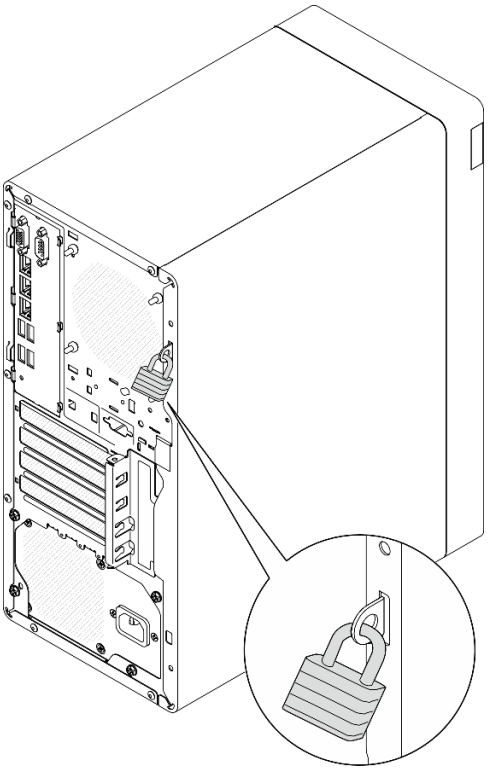

Figure 5. Padlock

Kensington-style cable lock

You can use a Kensington-style cable lock to secure your server to a desk, table, or other non-permanent fixture. The cable lock attaches to the security-lock slot at the rear of your server and is operated with a key or combination depending on the type selected. The cable lock also locks the server cover. This is the same type of lock used with many notebook computers. You can order such a cable lock directly from Lenovo by searching for **Kensington** at http://www.lenovo.com/support.

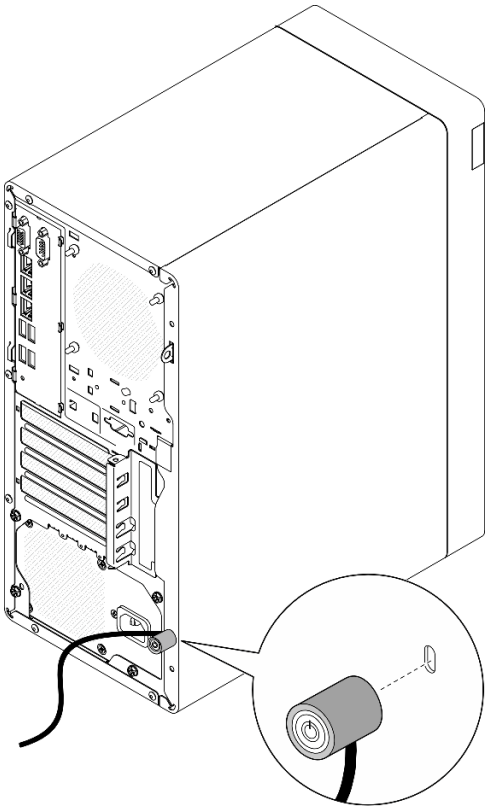

Figure 6. Kensington-style cable lock

System-board layout

The illustrations in this section provide information about the connectors, switches, and jumpers that are available on the system board.

For more information about the LEDs that are available on the system board, see "System-board LEDs" on page 190.

System-board connectors

The following illustration shows the internal connectors on the system board.

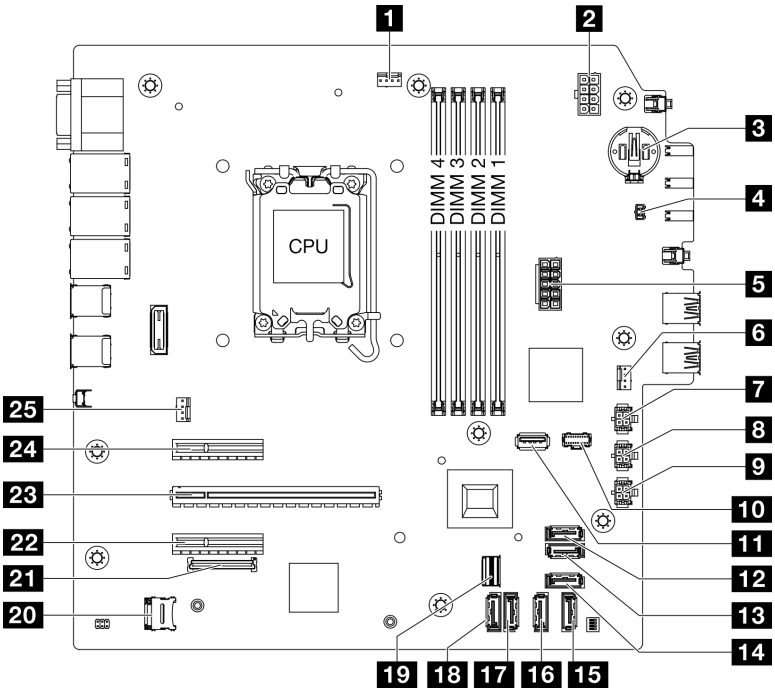

Figure 7. System-board connectors

Table 4. System-board connectors

1 Processor fan connector	14 SATA 4 connector (Slim ODD)
2 Processor power connector	15 SATA 3 connector (Bay 3)
3 3V battery (CR2032)	16 SATA 2 connector (Bay 2)
4 Intrusion switch connector	17 SATA 1 connector (Bay 1)
5 System power connector	18 SATA 0 connector (Bay 0)
6 Front fan connector	19 M.2 slimline connector
7 SATA power 3 connector	20 MicroSD socket
8 SATA power 2 connector	21 Firmware and RoT security module connector
9 SATA power 1 connector	22 PCIe slot 3
10 M.2 power connector	23 PCIe slot 2
11 USB 3.2 Gen 1 connector	24 PCIe slot 1
12 SATA 7 connector (M.2 kit)	25 Rear fan connector
13 SATA 6 connector (M.2 kit)	

System-board switches

The following illustration shows the location of the switches and jumpers on the server.

Note: If there is a clear protective sticker on the top of the switch blocks, you must remove and discard it to access the switches.

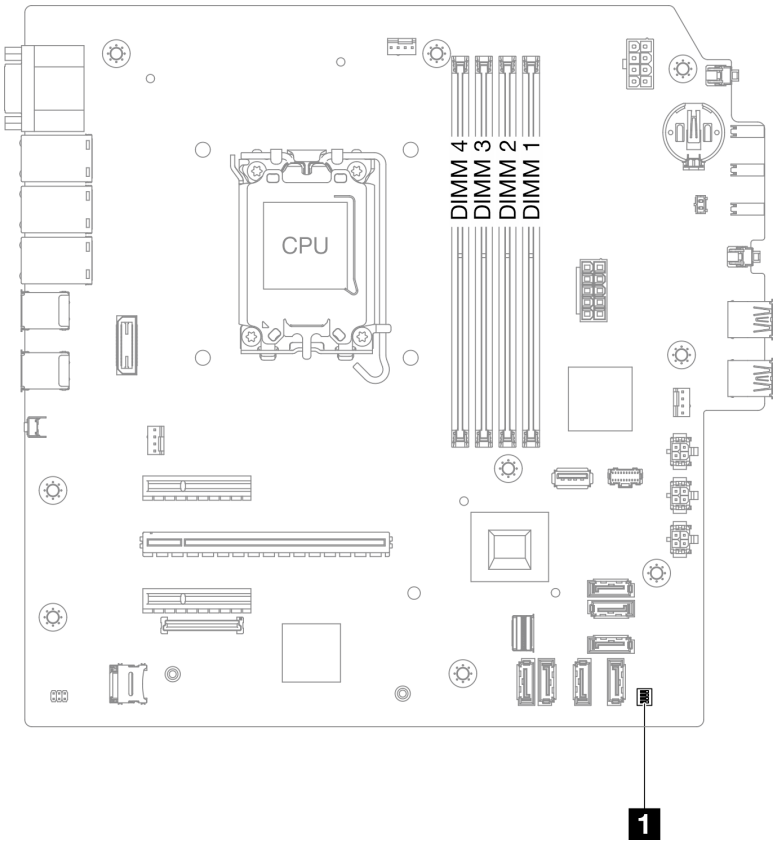

Figure 8. System-board switches

Important:

1. Before you change any switch settings or move any jumpers, turn off the server; then, disconnect all power cords and external cables. Review the following information:
   - https://pubs.lenovo.com/safety_documentation/
   - "Installation Guidelines" on page 37
   - "Handling static-sensitive devices" on page 40
   - "Power off the server" on page 43
2. Any system-board switch or jumper block that is not shown in the illustrations in this document are reserved.

SW1 switch block

The following table describes the functions of the SW1 switch block on the system board.

Switch number	Default position	Description	Definition
1	Off	Clear CMOS jumper	• Off: Normal (default). • On: Clear the real-time clock (RTC) registry.
2	Off	Reserved	Reserved

Switch number	Default position	Description	Definition
3	Off	Force XCC update jumper	• Off: Normal (default). • On: Force the Lenovo XClarity Controller to update to the latest version.
4	Off	Reserved	Reserved

System LEDs and diagnostics display

See the following section for information on available system LEDs and diagnostics display.

For more information, refer to “Troubleshooting by LEDs” on page 189.

Chapter 3. Parts list

Identify each of the components that is available for your server with the parts list.

For more information about ordering parts:

1. Go to **http://datacentersupport.lenovo.com** and navigate to the support page for your server.
2. Click **Parts**.
3. Enter the serial number to view a listing of parts for your server.

It is highly recommended that you check the power summary data for your server using Lenovo Capacity Planner before purchasing any new parts.

Note: Depending on the model, your server might look slightly different from the illustration.

© Copyright Lenovo 2024, 2025

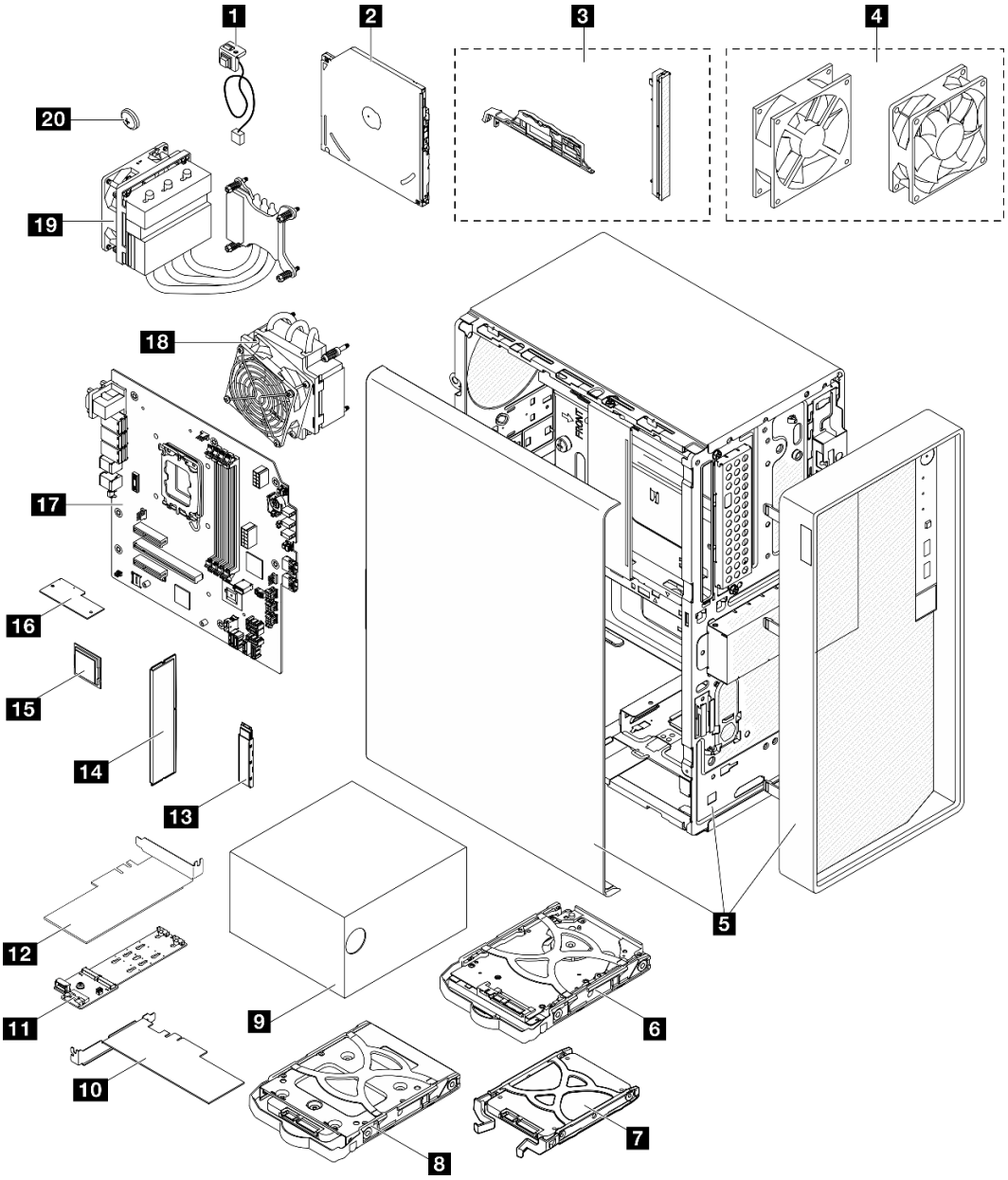

Figure 9. Server components

The parts listed in the following table are identified as one of the following:

- **T1:** Tier 1 customer replaceable unit (CRU). Replacement of Tier 1 CRUs is your responsibility. If Lenovo installs a Tier 1 CRU at your request with no service agreement, you will be charged for the installation.
- **T2:** Tier 2 customer replaceable unit (CRU). You may install a Tier 2 CRU yourself or request Lenovo to install it, at no additional charge, under the type of warranty service that is designated for your server.
- **F:** Field replaceable unit (FRU). FRUs must be installed only by trained service technicians.
- **C:** Consumable and Structural parts. Purchase and replacement of consumable and structural parts (components, such as a filler or bezel) is your responsibility. If Lenovo acquires or installs a structural component at your request, you will be charged for the service.

Description	Type	Description	Type
1 Intrusion switch	T1	2 Optical disk drive	T2
3 Bezel kit (including the optical disk drive bezel and latch)	F	4 Fan kit (including the front fan and rear fan)	T1
5 Chassis (with front bezel and server cover)	F	6 3.5-inch hard-disk drive assembly	T1
7 2.5-inch solid-state drive assembly	T1	8 3.5-inch solid-state drive assembly	T1
9 Power supply unit	T1	10 PCIe adapter	T1
11 M.2 boot adapter	T1	12 PCIe adapter for M.2 boot adapter	T1
13 M.2 drive	T1	14 Memory module	T1
15 Processor	F	16 Firmware and RoT security module	F
17 System board	F	18 Heat sink and fan module (for processor with TDP lower than 95W)	F
19 Heat sink and fan module (for processor with 95W TDP)	F	20 3V CMOS battery (CR2032)	C

Power cords

Several power cords are available, depending on the country and region where the server is installed.

To view the power cords that are available for the server:

1. Go to:

   http://dcsc.lenovo.com/#/
2. Click **Preconfigured Model** or **Configure to order**.
3. Enter the machine type and model for your server to display the configurator page.
4. Click **Power → Power Cables** to see all line cords.

Notes:

- For your safety, a power cord with a grounded attachment plug is provided to use with this product. To avoid electrical shock, always use the power cord and plug with a properly grounded outlet.
- Power cords for this product that are used in the United States and Canada are listed by Underwriter's Laboratories (UL) and certified by the Canadian Standards Association (CSA).
- For units intended to be operated at 115 volts: Use a UL-listed and CSA-certified cord set consisting of a minimum 18 AWG, Type SVT or SJT, three-conductor cord, a maximum of 15 feet in length and a parallel blade, grounding-type attachment plug rated 15 amperes, 125 volts.
- For units intended to be operated at 230 volts (U.S. use): Use a UL-listed and CSA-certified cord set consisting of a minimum 18 AWG, Type SVT or SJT, three-conductor cord, a maximum of 15 feet in length and a tandem blade, grounding-type attachment plug rated 15 amperes, 250 volts.
- For units intended to be operated at 230 volts (outside the U.S.): Use a cord set with a grounding-type attachment plug. The cord set should have the appropriate safety approvals for the country in which the equipment will be installed.
- Power cords for a specific country or region are usually available only in that country or region.

Chapter 4. Unboxing and setup

Information in this section assists you on unboxing and setting up the server. When unboxing the server, check if the items in the package are correct, and learn where to find information of server serial number and Lenovo XClarity Controller access. Make sure to follow the instructions in "Server setup checklist" on page 34 when setting up the server.

Server package contents

When you receive your server, verify that the shipment contains everything that you expected to receive.

The server package includes the following items:

- Server
- Keyboard*
- Material box, including items such as power cords*, accessory kit, and documentation.

Note: Items marked with asterisk (*) are available on some models only.

If any item is missing or damaged, contact your place of purchase. Ensure that you retain your proof of purchase and packing material. They might be required to receive warranty service.

Identify the server and access the Lenovo XClarity Controller

This section contains instruction on how to identify your server and where to find the Lenovo XClarity Controller access information.

Identifying your server

When you contact Lenovo for help, the machine type, model, and serial number information help support technicians to identify your server and provide faster service.

The illustration below shows the location of the ID label which contains the model number, machine type, and serial number of the server. You can also add other system information labels to the front of the server in the customer label spaces.

© Copyright Lenovo 2024, 2025

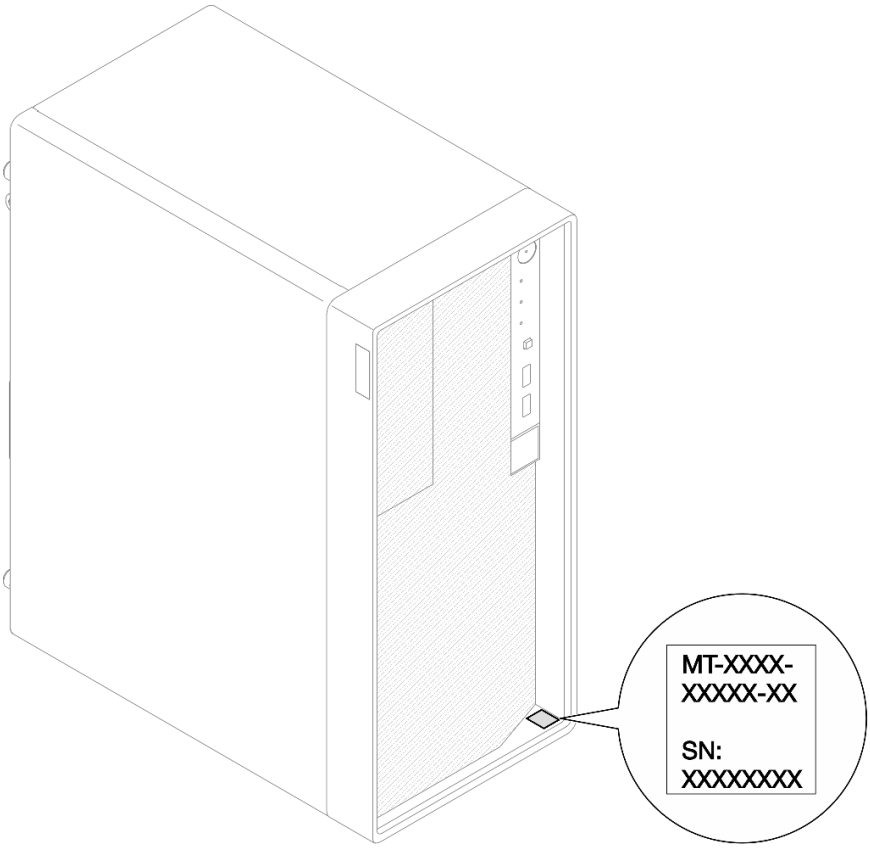

Figure 10. Location of the ID label

Lenovo XClarity Controller network access label

In addition, the Lenovo XClarity Controller network access label is attached on the top of the server. After you get the server, peel the XClarity Controller network access label away and store it in a safe place for future use.

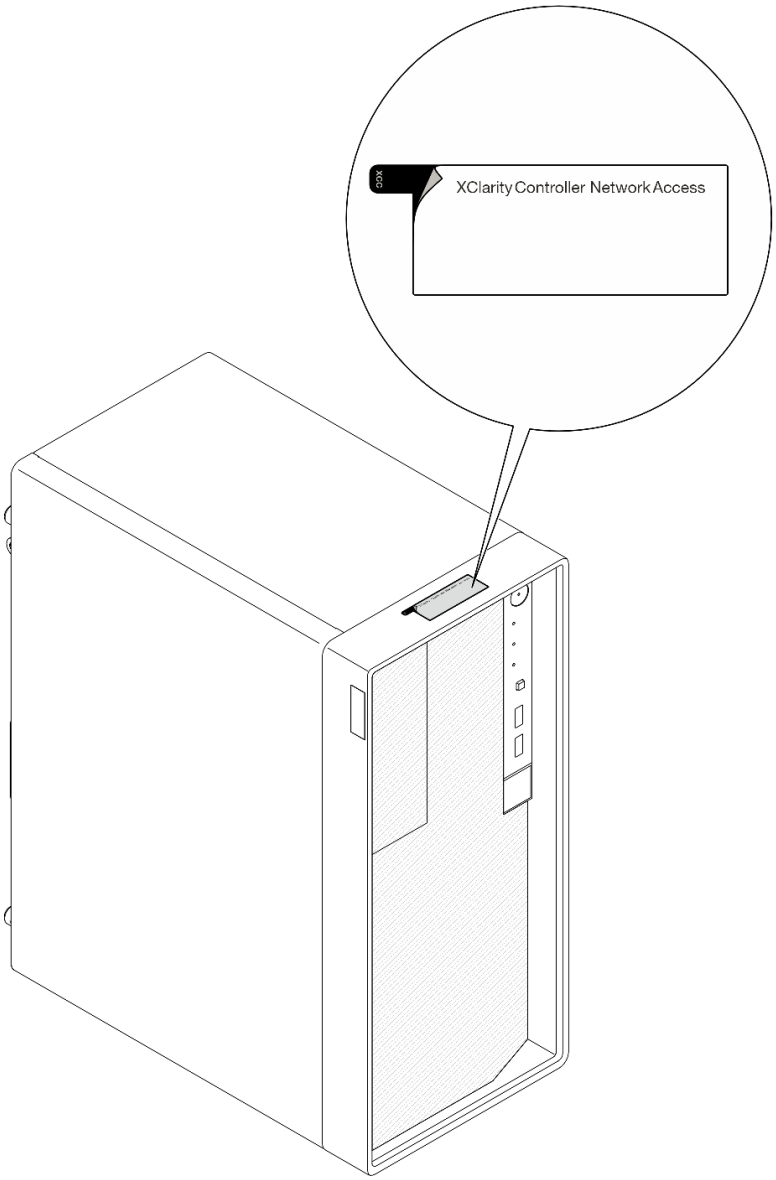

Figure 11. Location of XClarity Controller network access label

Service information QR code

On the inside surface of the tray cover, there is a quick response (QR) code that provides mobile access to service information. You can scan the QR code with a mobile device using a QR code reader application and get quick access to the Service Information web page. The Service Information web page provides additional information for parts installation and replacement videos, and error codes for solution support.

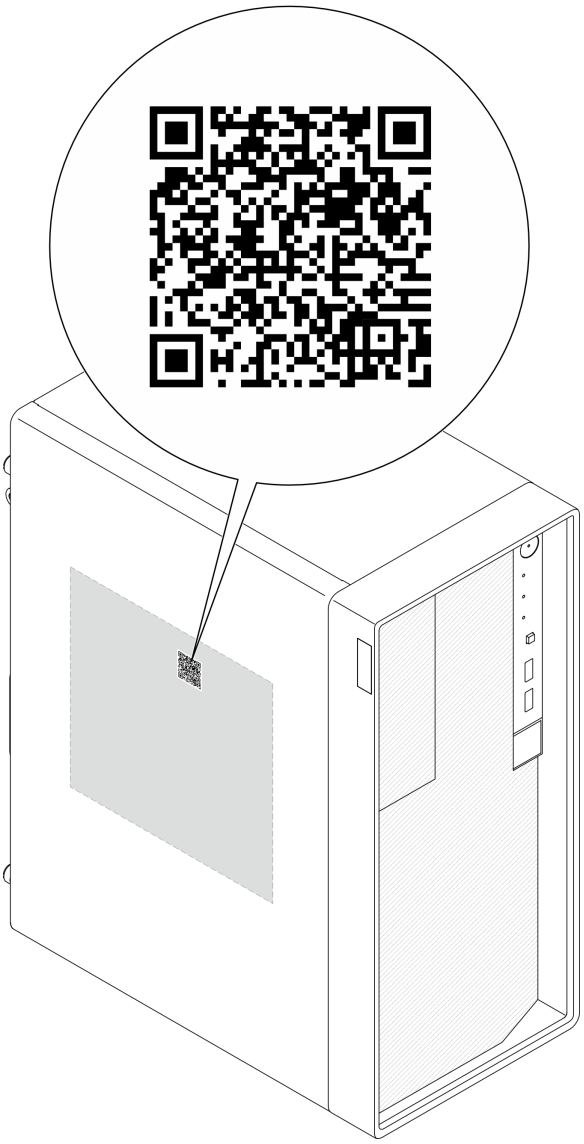

Figure 12. Service information QR code

Server setup checklist

Use the server setup checklist to ensure that you have performed all tasks that are required to set up your server.

The server setup procedure varies depending on the configuration of the server when it was delivered. In some cases, the server is fully configured and you just need to connect the server to the network and an AC power source, and then you can power on the server. In other cases, the server needs to have hardware options installed, requires hardware and firmware configuration, and requires an operating system to be installed.

The following steps describe the general procedure for setting up a server.

Setup the server hardware

Complete the following procedures to setup the server hardware.

1. Unpack the server package. See “Server package contents” on page 31.
2. Install any required hardware or server options. See the related topics in Chapter 5 “Hardware replacement procedures” on page 37.
3. If necessary, install the server into a standard rack cabinet by using the tower-to-rack conversion kit. See the documentation that comes with the optional conversion kit.
4. Connect all external cables to the server. See Chapter 2 “Server components” on page 15 for connectors locations.

   Typically, you will need to connect the following cables:

   - Connect server to the power source
   - Connect server to the data network
   - Connect the server to the storage device
   - Connect the server to the management network
5. Power on the server.

   Power button location and power LED are specified in “Front view” on page 15.

   The server can be turned on (power LED on) in any of the following ways:

   - You can press the power button.
   - The server can restart automatically after a power interruption.
   - The server can respond to remote power-on requests sent to the Lenovo XClarity Controller.

   Note: You can access the management processor interface to configure the system without powering on the server. Whenever the server is connected to power, the management processor interface is available. For details about accessing the management server processor, see “Opening and Using the XClarity Controller Web Interface” section in the XCC documentation compatible with your server at https://pubs.lenovo.com/lxcc-overview/.
6. Validate the server. Make sure that the power LED, Ethernet connector LED, and network LED are lit with green light, which means the server hardware was set up successfully.

   See “Front view” on page 15 and “Troubleshooting by LEDs” on page 189 for more information on the LED indications.

Configure the system

Complete the following procedures to configure the system. For detailed instructions, refer to Chapter 7 “System configuration” on page 177.

1. Set the network connection for the Lenovo XClarity Controller to the management network.
2. Update the firmware for the server, if necessary.
3. Configure the firmware for the server.

   The following information is available for RAID configuration:

   - https://lenovopress.lenovo.com/lp0578-lenovo-raid-introduction
   - https://lenovopress.lenovo.com/lp0579-lenovo-raid-management-tools-and-resources
4. Install the operating system.
5. Back up the server configuration.
6. Install the applications and programs for which the server is intended to be used.

Chapter 5. Hardware replacement procedures

This section provides installation and removal procedures for all serviceable system components. Each component replacement procedure references any tasks that need to be performed to gain access to the component being replaced.

Installation Guidelines

Before installing components in your server, read the installation guidelines.

Before installing optional devices, read the following notices carefully:

Attention: Prevent exposure to static electricity, which might lead to system halt and loss of data, by keeping static-sensitive components in their static-protective packages until installation, and handling these devices with an electrostatic-discharge wrist strap or other grounding system.

- Read the safety information and guidelines to ensure your safety at work:
  - A complete list of safety information for all products is available at:

    https://pubs.lenovo.com/safety_documentation/
  - The following guidelines are available as well: "Working inside the server with the power on" on page 39 and "Handling static-sensitive devices" on page 40.
- Make sure the components you are installing are supported by your server.
  - For a list of supported optional components for the server, see https://serverproven.lenovo.com.
  - For the option package contents, see https://serveroption.lenovo.com/.
- For more information about ordering parts:
  1. Go to **http://datacentersupport.lenovo.com** and navigate to the support page for your server.
  2. Click **Parts**.
  3. Enter the serial number to view a listing of parts for your server.
- When you install a new server, download and apply the latest firmware. This will help ensure that any known issues are addressed, and that your server is ready to work with optimal performance. Go to https://datacentersupport.lenovo.com/tw/en/products/servers/thinksystem/st50v3/7df3/downloads/driver-list/ to download firmware updates for your server.

  Important: Some cluster solutions require specific code levels or coordinated code updates. If the component is part of a cluster solution, verify the latest Best Recipe code level menu for cluster supported firmware and driver before you update the code.
- If you replace a part, such as an adapter, that contains firmware, you might also need to update the firmware for that part. For more information about updating firmware, see "Update the firmware" on page 178.
- It is good practice to make sure that the server is working correctly before you install an optional component.
- Keep the working area clean, and place removed components on a flat and smooth surface that does not shake or tilt.
- Do not attempt to lift an object that might be too heavy for you. If you have to lift a heavy object, read the following precautions carefully:
  - Make sure that you can stand steadily without slipping.
  - Distribute the weight of the object equally between your feet.

© Copyright Lenovo 2024, 2025

  - Use a slow lifting force. Never move suddenly or twist when you lift a heavy object.
  - To avoid straining the muscles in your back, lift by standing or by pushing up with your leg muscles.
- Back up all important data before you make changes related to the disk drives.
- Have a small flat-blade screwdriver, a small Phillips screwdriver, and a T8 torx screwdriver available.
- To view the error LEDs on the system board (system board assembly) and internal components, leave the power on.
- You do not have to turn off the server to remove or install hot-swap power supplies, hot swap fans, or hot-plug USB devices. However, you must turn off the server before you perform any steps that involve removing or installing adapter cables, and you must disconnect the power source from the server before you perform any steps that involve removing or installing a riser card.
- When replacing power supply units or fans, make sure to refer to redundancy rules for these components.
- Blue on a component indicates touch points, where you can grip to remove a component from or install it in the server, open or close a latch, and so on.
- Orange on a component or an orange label on or near a component indicates that the component can be hot-swapped if the server and operating system support hot-swap capability, which means that you can remove or install the component while the server is still running. (Orange can also indicate touch points on hot-swap components.) See the instructions for removing or installing a specific hot-swap component for any additional procedures that you might have to perform before you remove or install the component.
- The red strip on the drives, adjacent to the release latch, indicates that the drive can be hot-swapped if the server and operating system support hot-swap capability. This means that you can remove or install the drive while the server is still running.

  Note: See the system specific instructions for removing or installing a hot-swap drive for any additional procedures that you might need to perform before you remove or install the drive.
- After finishing working on the server, make sure you reinstall all safety shields, guards, labels, and ground wires.

Safety inspection checklist

Use the information in this section to identify potentially unsafe conditions with your server. As each machine was designed and built, required safety items were installed to protect users and service technicians from injury.

Note: The product is not suitable for use at visual display workplaces according to §2 of the Workplace Regulations.

Note: The set-up of the server is made in the server room only.

CAUTION:
This equipment must be installed or serviced by trained personnel, as defined by the IEC 62368-1, the standard for Safety of Electronic Equipment within the Field of Audio/Video, Information Technology and Communication Technology. Lenovo assumes you are qualified in the servicing of equipment and trained in recognizing hazards energy levels in products. Access to the equipment is by the use of a tool, lock and key, or other means of security, and is controlled by the authority responsible for the location.

Important: Electrical grounding of the server is required for operator safety and correct system function. Proper grounding of the electrical outlet can be verified by a certified electrician.

Use the following checklist to verify that there are no potentially unsafe conditions:

1. Make sure that the power is off and the power cord is disconnected.

2. Check the power cord.
   - Make sure that the third-wire ground connector is in good condition. Use a meter to measure third-wire ground continuity for 0.1 ohm or less between the external ground pin and the frame ground.
   - Make sure that the power cord is the correct type.

     To view the power cords that are available for the server:

     a. Go to:

        http://dcsc.lenovo.com/#/

     b. Click **Preconfigured Model** or **Configure to order**.

     c. Enter the machine type and model for your server to display the configurator page.

     d. Click **Power → Power Cables** to see all line cords.
   - Make sure that the insulation is not frayed or worn.
3. Check for any obvious non-Lenovo alterations. Use good judgment as to the safety of any non-Lenovo alterations.
4. Check inside the server for any obvious unsafe conditions, such as metal filings, contamination, water or other liquid, or signs of fire or smoke damage.
5. Check for worn, frayed, or pinched cables.
6. Make sure that the power-supply cover fasteners (screws or rivets) have not been removed or tampered with.

System reliability guidelines

Review the system reliability guidelines to ensure proper system cooling and reliability.

Make sure the following requirements are met:

- When the server comes with redundant power, a power supply must be installed in each power-supply bay.
- Adequate space around the server must be spared to allow server cooling system to work properly. Leave approximately 50 mm (2.0 in.) of open space around the front and rear of the server. Do not place any object in front of the fans.
- For proper cooling and airflow, refit the server cover before you turn the power on. Do not operate the server for more than 30 minutes with the server cover removed, for it might damage server components.
- Cabling instructions that come with optional components must be followed.
- A failed fan must be replaced within 48 hours after malfunction.
- A removed hot-swap fan must be replaced within 30 seconds after removal.
- A removed hot-swap drive must be replaced within two minutes after removal.
- A removed hot-swap power supply must be replaced within two minutes after removal.
- Every air baffle that comes with the server must be installed when the server starts (some servers might come with more than one air baffle). Operating the server with a missing air baffle might damage the processor.
- All processor sockets must contain either a socket cover or a processor with heat sink.
- When more than one processor is installed, fan population rules for each server must be strictly followed.

Working inside the server with the power on

You might need to keep the power on with the server cover removed to look at system information on the display panel or to replace hot-swap components. Review these guidelines before doing so.

Attention: The server might stop and data loss might occur when internal server components are exposed to static electricity. To avoid this potential problem, always use an electrostatic-discharge wrist strap or other grounding systems when working inside the server with the power on.

- Avoid loose-fitting clothing, particularly around your forearms. Button or roll up long sleeves before working inside the server.
- Prevent your necktie, scarf, badge rope, or hair from dangling into the server.
- Remove jewelry, such as bracelets, necklaces, rings, cuff links, and wrist watches.
- Remove items from your shirt pocket, such as pens and pencils, in case they fall into the server as you lean over it.
- Avoid dropping any metallic objects, such as paper clips, hairpins, and screws, into the server.

Handling static-sensitive devices

Review these guidelines before you handle static-sensitive devices to reduce the possibility of damage from electrostatic discharge.

Attention: Prevent exposure to static electricity, which might lead to system halt and loss of data, by keeping static-sensitive components in their static-protective packages until installation, and handling these devices with an electrostatic-discharge wrist strap or other grounding system.

- Limit your movement to prevent building up static electricity around you.
- Take additional care when handling devices during cold weather, for heating would reduce indoor humidity and increase static electricity.
- Always use an electrostatic-discharge wrist strap or other grounding system, particularly when working inside the server with the power on.
- While the device is still in its static-protective package, touch it to an unpainted metal surface on the outside of the server for at least two seconds. This drains static electricity from the package and from your body.
- Remove the device from the package and install it directly into the server without putting it down. If it is necessary to put the device down, put it back into the static-protective package. Never place the device on the server or on any metal surface.
- When handling a device, carefully hold it by the edges or the frame.
- Do not touch solder joints, pins, or exposed circuitry.
- Keep the device from others' reach to prevent possible damages.

Memory module installation rules and order

Memory modules must be installed in a specific order based on the memory configuration that you implement and the number of processors and memory modules installed in the server.

Supported memory types

For information on the types of memory module supported by this server, see “Memory” section in “Technical specifications” on page 3.

Information about optimizing memory performance and configuring memory is available at the Lenovo Press website:

https://lenovopress.lenovo.com/servers/options/memory

In addition, you can take advantage of a memory configurator, which is available at the following site:

https://dcsc.lenovo.com/#/memory_configuration

Specific information about the required installation order of memory modules in your server based on the system configuration and memory mode that you are implementing is shown below.

Memory modules and processors layout

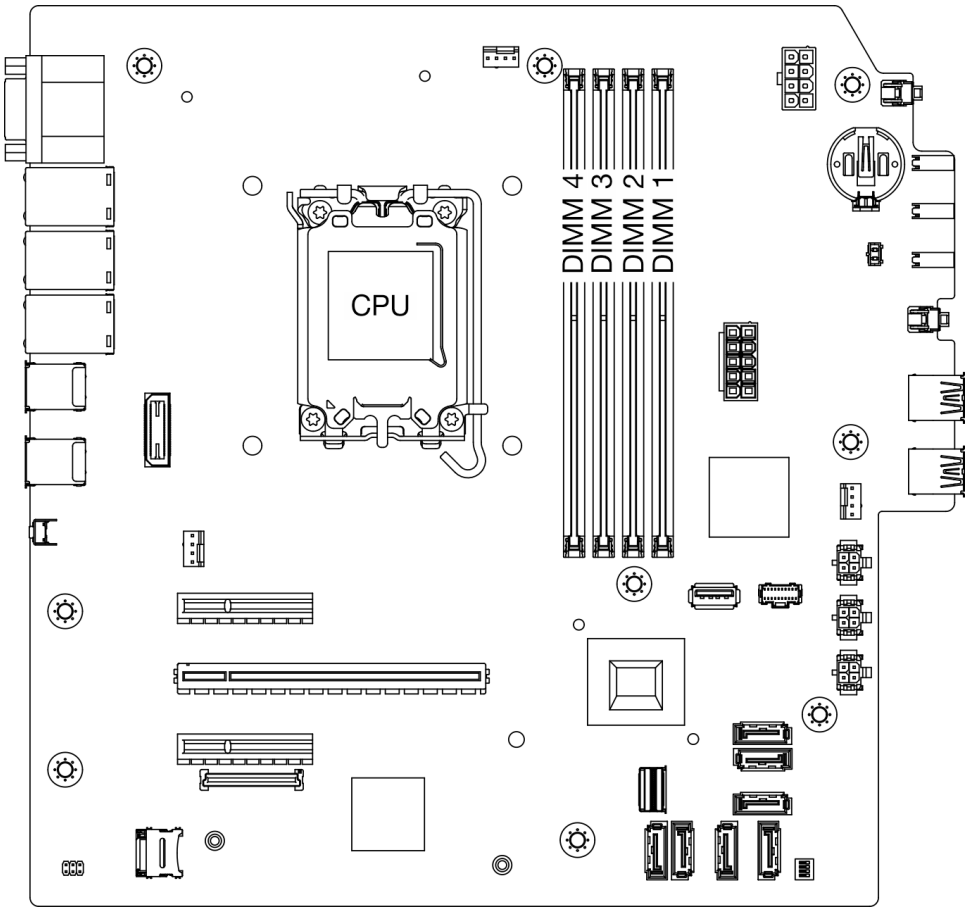

Figure 13. Memory modules and processors layout

Table 5. Memory slot and channel identification

Channel	Channel A		Channel B	
	CHA2	CHA1	CHB2	CHB1
Slot number	4	3	2	1

Supported type of memory modules

This server supports the following type of memory modules:
- TruDDR5 4800 MHz UDIMM: 16 GB (1Rx8), 32 GB (2Rx8)
- TruDDR5 5600 MHz UDIMM: 16 GB (1Rx8), 32 GB (2Rx8)

Memory mode and installation order

Independent mode

Independent mode provides high performance memory capability. You can populate all channels with no matching requirements. Individual channels can run at different memory module timings, but all channels must run at the same interface frequency.

For best performance, make sure all memory modules have the same memory capacity, speed, and vendor.

Notes:
- When single-rank (1R) and dual-rank (2R) memory modules are mixed in the same system, the memory speed is 2000 MHz.
- The 4800 MHz memory modules are only supported with Intel Xeon E-2400 series and Pentium processors.

The following table shows the memory module installation order:

Table 6. Memory module installation sequence

Total memory module installed	Memory module slot number				Memory speed
	4	3	2	1	
One		√			• 1R: 4400 MHz • 2R: 4400 MHz
Two		√		√	
Three	√	√		√	• 1R: 4000 MHz • 2R: 3600 MHz
Four	√	√	√	√	

Power on and power off the server

Follow the instructions in this section to power on and power off the server.

Power on the server

After the server performs a short self-test (power status LED flashes quickly) when connected to input power, it enters a standby state (power status LED flashes once per second).

Power button location and power LED are specified in “Front view” on page 15.

The server can be turned on (power LED on) in any of the following ways:

- You can press the power button.
- The server can restart automatically after a power interruption.
- The server can respond to remote power-on requests sent to the Lenovo XClarity Controller.

For information about powering off the server, see “Power off the server” on page 43.

Power off the server

The server remains in a standby state when it is connected to a power source, allowing the Lenovo XClarity Controller to respond to remote power-on requests. To remove all power from the server (power LED off), you must disconnect all power cables.

Power button location and power LED are specified in “Front view” on page 15.

To place the server in a standby state (power LED flashes once per second):

Note: The Lenovo XClarity Controller can place the server in a standby state as an automatic response to a critical system failure.

- Start an orderly shutdown using the operating system (if supported by your operating system).
- Press the power button to start an orderly shutdown (if supported by your operating system).
- Press and hold the power button for more than 4 seconds to force a shutdown.

When in a standby state, the server can respond to remote power-on requests sent to the Lenovo XClarity Controller. For information about powering on the server, see “Power on the server” on page 42.

Server replacement

Follow instructions in this section to remove and install the server.

Remove the server from rack

Follow this procedure to remove the server from the rack.

S002

CAUTION:
The power-control button on the device and the power switch on the power supply do not turn off the electrical current supplied to the device. The device also might have more than one power cord. To remove all electrical current from the device, ensure that all power cords are disconnected from the power source.

S014

CAUTION:
Hazardous voltage, current, and energy levels might be present. Only a qualified service technician is authorized to remove the covers where the label is attached.

S033

CAUTION:
Hazardous energy present. Voltages with hazardous energy might cause heating when shorted with metal, which might result in spattered metal, burns, or both.

About this task

Attention:

- Read "Installation Guidelines" on page 37 and "Safety inspection checklist" on page 38 to ensure that you work safely.
- Power off the server and peripheral devices and disconnect the power cords and all external cables. See "Power off the server" on page 43.

Procedure

Note: Your system might look slightly different from the illustration below.

Step 1. Remove the two M6 x 16 screws on the front of the rack cabinet.

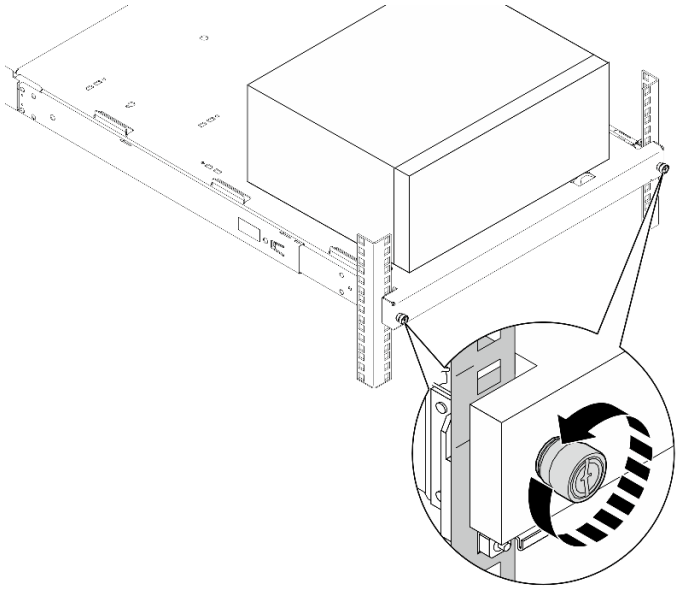

Figure 14. Removing the screws on the front of the rack cabinet

Step 2. Remove the server from the rails.

a. ❶ Slide and pull the rack server tray out of the rack cabinet.

b. ❷ Lift the server out of the tray.

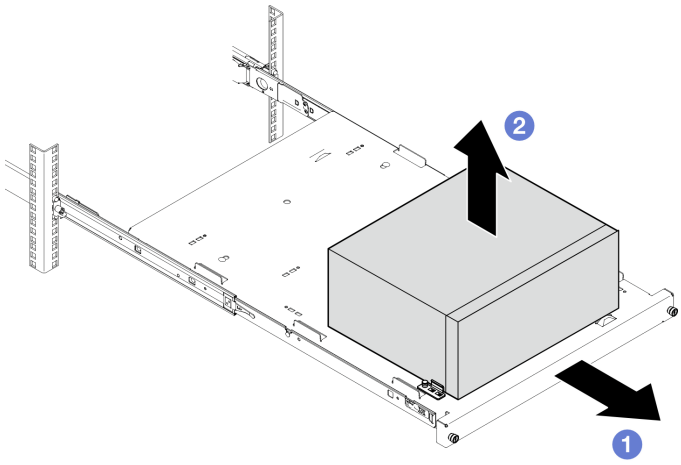

Figure 15. Removing the server from the rails

After you finish

1. Place the server on its side with the cover up.
2. To install the server to the rails, see "Install the server to rack" on page 45.

Install the server to rack

Follow this procedure to install the server to the rack.

S002

CAUTION:
The power-control button on the device and the power switch on the power supply do not turn off the electrical current supplied to the device. The device also might have more than one power cord. To remove all electrical current from the device, ensure that all power cords are disconnected from the power source.

S014

CAUTION:
Hazardous voltage, current, and energy levels might be present. Only a qualified service technician is authorized to remove the covers where the label is attached.

S033

CAUTION:
Hazardous energy present. Voltages with hazardous energy might cause heating when shorted with metal, which might result in spattered metal, burns, or both.

About this task

Attention:

- Read "Installation Guidelines" on page 37 and "Safety inspection checklist" on page 38 to ensure that you work safely.
- Power off the server and peripheral devices and disconnect the power cords and all external cables. See "Power off the server" on page 43.

Note: To install rails to rack, see the *Rail Installation Guide* at https://serveroption.lenovo.com/rail_options/rail_options_tower_servers.

Firmware and driver download: You might need to update the firmware or driver after replacing a component.

- Go to https://datacentersupport.lenovo.com/tw/en/products/servers/thinksystem/st50v3/7df3/downloads/driver-list/ to see the latest firmware and driver updates for your server.
- Go to "Update the firmware" on page 178 for more information on firmware updating tools.

Procedure

Step 1. Install the four brackets to the tray as illustrated.

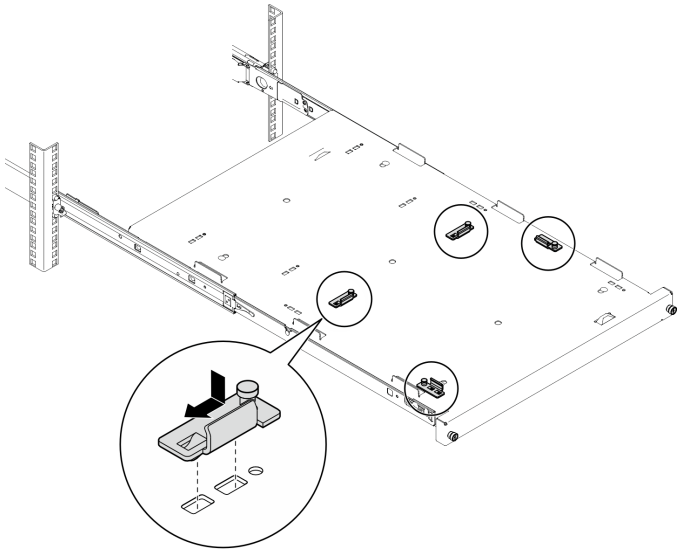

Figure 16. Installing the brackets to the tray

Step 2. Install the four rubber safety pads to the tray as illustrated.

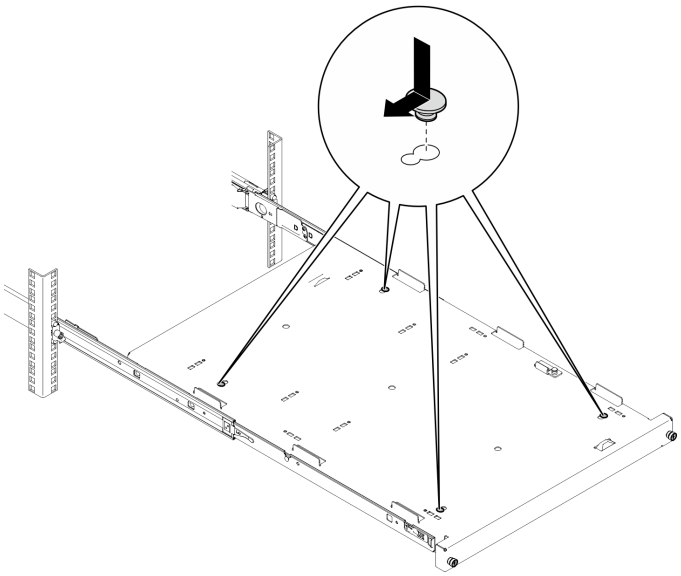

Figure 17. Installing the rubber safety pads to the tray

Step 3. Orient the server to have the server cover facing up and the front bezel facing the front of the rails; then, align the server with the brackets and the tab on the front of the tray, and gently place the server on the tray.

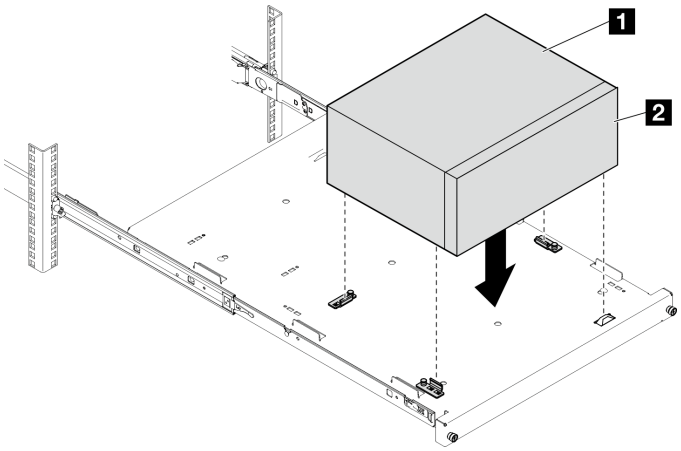

Figure 18. Installing the server to the tray

1	Server cover
2	Server front bezel

Step 4. Install the server into the rack cabinet.

a. ❶ Lift the rail latches on both sides.

b. ❷ Gently slide and push the tray into the rack cabinet.

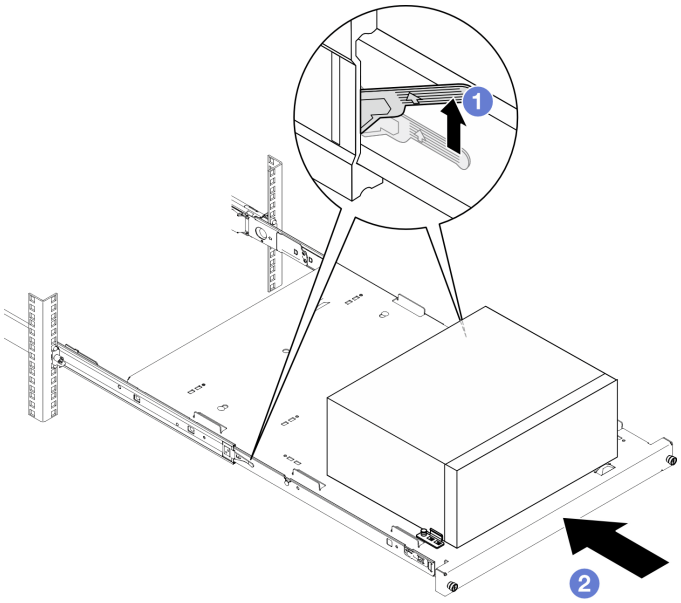

Figure 19. Installing the server into the rack cabinet

Step 5. Secure the tray with two M6 x 16 screws to the front of the rack cabinet.

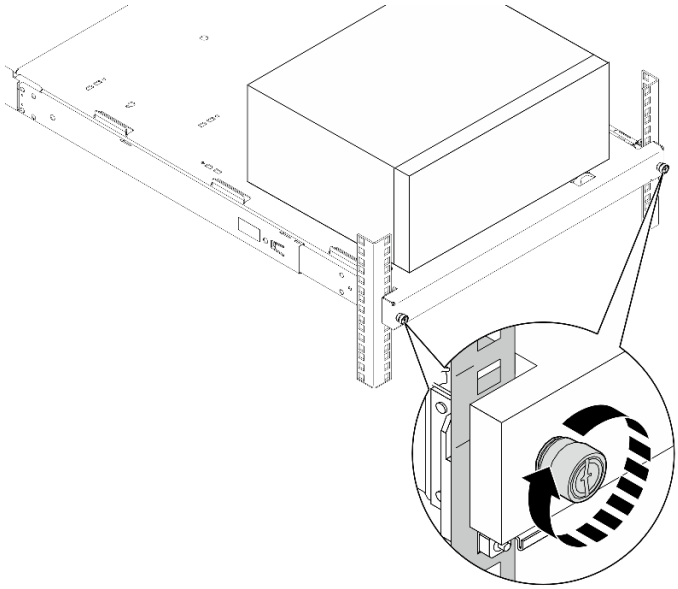

Figure 20. Securing the tray with screws

After you finish

Complete the parts replacement. See "Complete the parts replacement" on page 159.

CMOS battery (CR2032) replacement

Follow instructions in this section to remove and install the CMOS battery (CR2032).

Remove the CMOS battery (CR2032)

Follow instructions in this section to remove the CMOS battery (CR2032).

About this task

S002

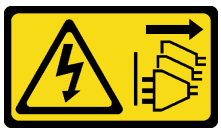

CAUTION:
The power-control button on the device and the power switch on the power supply do not turn off the electrical current supplied to the device. The device also might have more than one power cord. To remove all electrical current from the device, ensure that all power cords are disconnected from the power source.

S004

CAUTION:
When replacing the lithium battery, use only Lenovo specified part number or an equivalent type of battery recommended by the manufacturer. If your system has a module containing a lithium battery, replace it only with the same module type made by the same manufacturer. The battery contains lithium and can explode if not properly used, handled, or disposed of.

Do not:

- **Throw or immerse into water**
- **Heat to more than 100°C (212°F)**
- **Repair or disassemble**

Dispose of the battery as required by local ordinances or regulations.

S005

CAUTION:
The battery is a lithium ion battery. To avoid possible explosion, do not burn the battery. Exchange it only with the approved part. Recycle or discard the battery as instructed by local regulations.

Attention:

- Read "Installation Guidelines" on page 37 and "Safety inspection checklist" on page 38 to ensure that you work safely.

- Power off the server and peripheral devices and disconnect the power cords and all external cables. See "Power off the server" on page 43.
- If the server is in a rack, remove it from the rack. See "Remove the server from rack" on page 43.
- Remove any locking device that secures the server, such as a Kensington lock or a padlock.
- Place the server on its side with the cover up.

Procedure

Step 1. Make preparation for this task.

a. Remove the server cover. See "Remove the server cover" on page 154.

Attention: The heat sinks and processor could be very hot. To avoid burning yourself, wait for a few minutes after turning off the server before you remove the server cover.

b. If applicable, remove the optical drive. See "Remove an optical drive" on page 83.

c. If applicable, remove the optical drive cage. See "Remove an optical drive cage" on page 89.

Step 2. Locate the CMOS battery on the system board. See "System-board connectors" on page 23.

Step 3. Remove the CMOS battery.

a. ❶ Press the battery clip in the direction as shown.

b. ❷ Carefully tilt and lift CMOS battery out of the socket.

Note: Do not lift the battery with excessive force, as it may cause damages to the socket on the system board. Any damage to the socket may require replacing the system board.

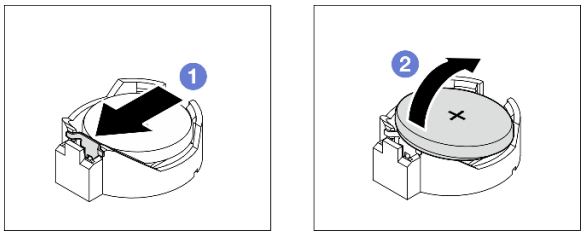

Figure 21. CMOS battery removal

After you finish

1. Install a replacement unit. See "Install the CMOS battery (CR2032)" on page 50

   Note: Make sure to install the CMOS battery before powering on the server. Otherwise, it might cause system abnormality.

2. Dispose the component with compliance to local regulations.

Demo video

Watch the procedure on YouTube

Install the CMOS battery (CR2032)

Follow instructions in this section to install the CMOS battery (CR2032).

About this task

S002

CAUTION:
The power-control button on the device and the power switch on the power supply do not turn off the electrical current supplied to the device. The device also might have more than one power cord. To remove all electrical current from the device, ensure that all power cords are disconnected from the power source.

S004

CAUTION:
When replacing the lithium battery, use only Lenovo specified part number or an equivalent type of battery recommended by the manufacturer. If your system has a module containing a lithium battery, replace it only with the same module type made by the same manufacturer. The battery contains lithium and can explode if not properly used, handled, or disposed of.

Do not:

- **Throw or immerse into water**
- **Heat to more than 100°C (212°F)**
- **Repair or disassemble**

Dispose of the battery as required by local ordinances or regulations.

S005

CAUTION:
The battery is a lithium ion battery. To avoid possible explosion, do not burn the battery. Exchange it only with the approved part. Recycle or discard the battery as instructed by local regulations.

Attention:

- Read "Installation Guidelines" on page 37 and "Safety inspection checklist" on page 38 to ensure that you work safely.
- Touch the static-protective package that contains the component to any unpainted metal surface on the server; then, remove it from the package and place it on a static-protective surface.

The following notes describe information that you must consider when replacing the battery.

- When replacing the CMOS battery, you must replace it with another CMOS battery of the same type from the same manufacturer.
- After replacing the CMOS battery, make sure to reconfigure the server and reset system date and time.

- To avoid possible danger, make sure to read and follow the safety statements.
- Lenovo has designed this product with your safety in mind. The CMOS battery must be handled correctly to avoid possible danger. If you install the CMOS battery, do adhere to the following instructions.

  Note: In the U. S., call 1-800-IBM-4333 for information about battery disposal.
- If you replace the original CMOS battery with a heavy-metal battery or a battery with heavy-metal components, be aware of the following environmental consideration. Batteries and accumulators that contain heavy metals must not be disposed of along with normal domestic waste. They should be taken back free of charge by for recycle or proper disposal by the manufacturer, distributor, or representatives.

Procedure

Step 1. Follow any special handling and installation instructions that come with the CMOS battery.

Step 2. Locate the CMOS battery on the system board. See "System-board connectors" on page 23.

Step 3. Install the CMOS battery.

a. ❶ Pivot the CMOS battery to insert it into the socket, with positive (+) side faces up.

b. ❷ Press the battery straight down until it clicks in place.

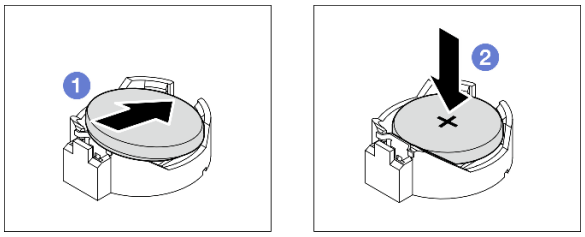

Figure 22. CMOS battery installation

After you finish

1. If applicable, install the optical drive cage. See "Install the optical drive cage" on page 90.
2. If applicable, install the optical drive. See "Install an optical drive" on page 86.
3. Install the server cover. See "Install the server cover" on page 157.
4. Complete the parts replacement. See "Complete the parts replacement" on page 159.
5. Reconfigure the server and reset the system date and time.

Demo video

Watch the procedure on YouTube

Drive and drive cage replacement

Follow instructions in this section to remove and install a drive or a drive cage.

Drive bay locations

See the following illustration for the locations of drive bays and the types of drives supported.

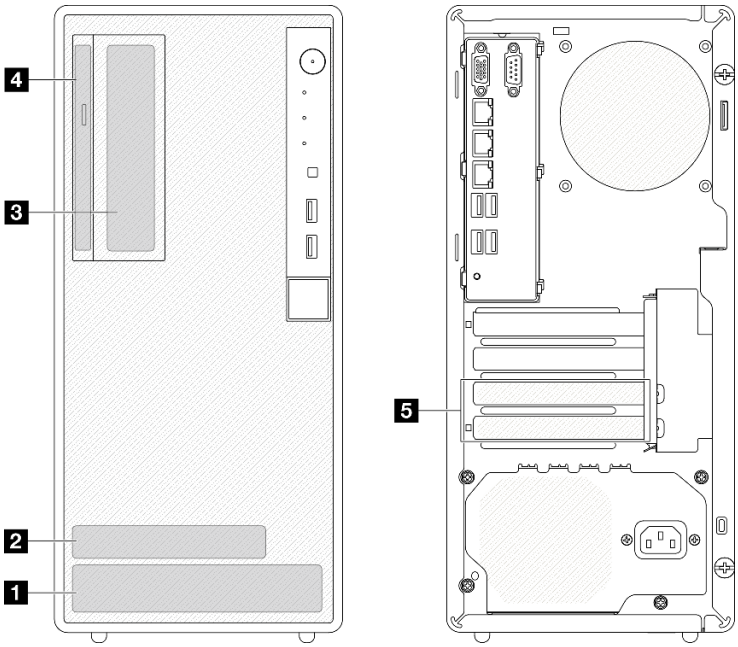

Figure 23. Drive bay locations

Drive bay	Types of drive supported
1 Bay 0	3.5-inch simple-swap drive
2 Bay 1	2.5-inch simple-swap drive
3 Bay 2	3.5-inch simple-swap drive
4 Optical drive bay	9mm slim SATA Optical disk drive
5 Bay 3	3.5-inch simple-swap drive

Simple-swap drive and drive cage replacement (bay 0-1)

Follow instructions in this section to remove and install a simple-swap drive and drive cage from and into bay 0 or bay 1.

Remove a simple-swap drive (bay 0-1)

Follow instructions in this section to remove a simple-swap drive from bay 0 or bay 1.

S002

CAUTION:
The power-control button on the device and the power switch on the power supply do not turn off the electrical current supplied to the device. The device also might have more than one power cord. To remove all electrical current from the device, ensure that all power cords are disconnected from the power source.

About this task

Attention:

- Read "Installation Guidelines" on page 37 and "Safety inspection checklist" on page 38 to ensure that you work safely.
- Power off the server and peripheral devices and disconnect the power cords and all external cables. See "Power off the server" on page 43.
- If the server is in a rack, remove it from the rack. See "Remove the server from rack" on page 43.
- Remove any locking device that secures the server, such as a Kensington lock or a padlock.
- Place the server on its side with the cover up.

Procedure

Step 1. Make preparation for this task.

a. Remove the server cover. See "Remove the server cover" on page 154.

Attention: The heat sinks and processor could be very hot. To avoid burning yourself, wait for a few minutes after turning off the server before you remove the server cover.

Step 2. Disconnect the cables from the drive assembly.

Step 3. Remove the drive assembly.

Remove the 3.5-inch drive assembly from drive bay 0

Hold the retainer handle, and lift the drive assembly out of the drive bay.

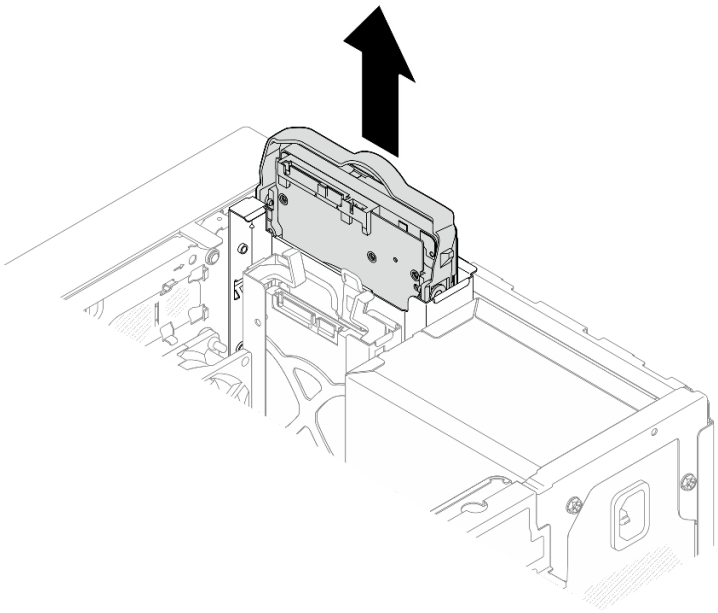

Figure 24. Removing drive assembly from drive bay 0

Remove the 2.5-inch drive assembly from drive bay 1

a. ❶ Pinch the retainer handles.

b. ❷ Lift the drive assembly out from the drive bay.

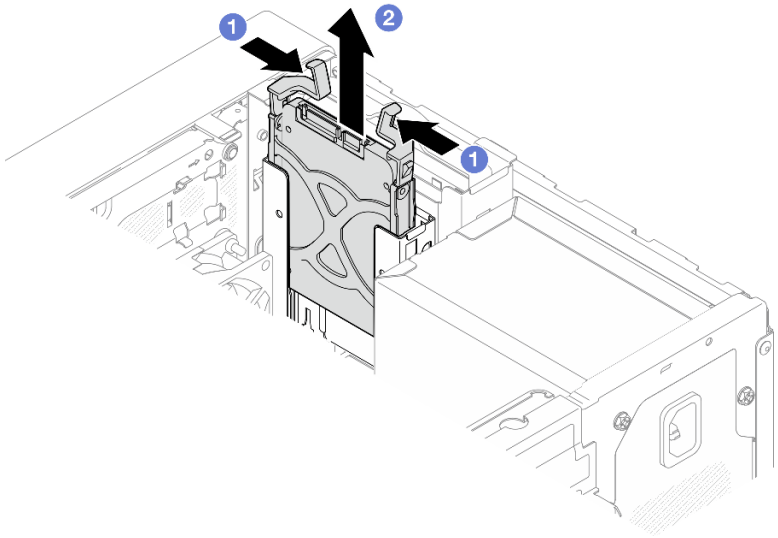

Figure 25. Removing drive assembly from drive bay 1

Step 4. If necessary, remove the drive from the retainer. Tear both sides of the retainer apart, and remove the drive.

Remove a 3.5-inch drive from the retainer

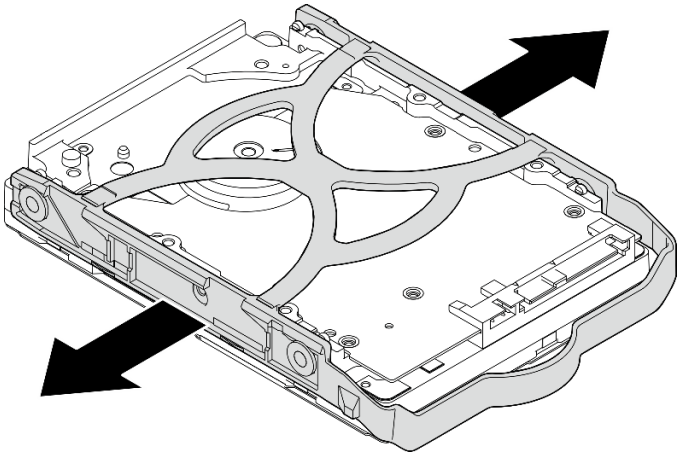

Figure 26. Removing a 3.5-inch drive from the retainer

Note: Depending on the configuration, the 3.5-inch drive may be the model in the illustration below.

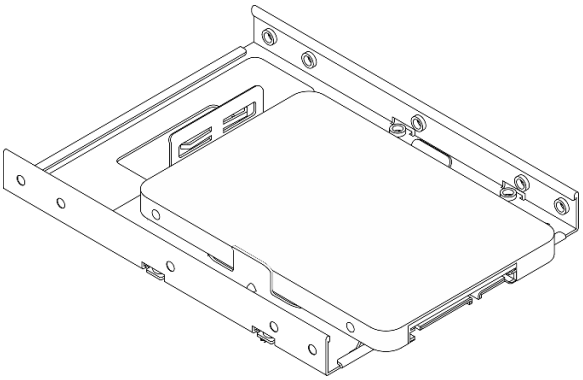

Remove a 2.5-inch drive from the retainer

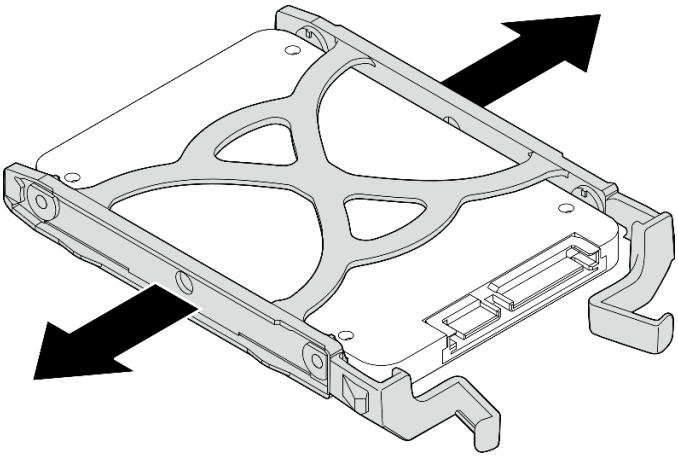

Figure 27. Removing a 2.5-inch drive from the retainer

After you finish

1. Install a 3.5-inch drive to drive bay 0 or a 2.5-inch drive to drive bay 1. See "Install a simple-swap drive (bay 0-1)" on page 56.
2. If you are instructed to return the component or optional device, follow all packaging instructions, and use any packaging materials for shipping that are supplied to you.

Demo video

Watch the procedure on YouTube

Install a simple-swap drive (bay 0-1)

Follow instructions in this section to install a simple-swap drive to bay 0 or bay 1.

S002

CAUTION:
The power-control button on the device and the power switch on the power supply do not turn off the electrical current supplied to the device. The device also might have more than one power cord. To remove all electrical current from the device, ensure that all power cords are disconnected from the power source.

About this task

Attention:

- Read "Installation Guidelines" on page 37 and "Safety inspection checklist" on page 38 to ensure that you work safely.
- Touch the static-protective package that contains the component to any unpainted metal surface on the server; then, remove it from the package and place it on a static-protective surface.
- Make sure the type of drives to be installed is supported. Following are the types supported:
  - 3.5-inch simple-swap hard-disk drive or solid-state drive in drive bay 0, drive bay 2 and drive bay 3.
  - 2.5-inch simple-swap solid-state drive in drive bay 1.

  For a complete list of supported optional devices for the server, see https://serverproven.lenovo.com.
- If there are more than one drives to be installed, determine installation order based on the following rules:
  - Start with solid-state drives, and proceed with hard-disk drives.
  - When installing one 3.5-inch solid-state drive and one 3.5-inch hard-disk drive, install the solid-state drive in bay 0 and the hard-disk drive in bay 2.
  - Start with the drive with the lowest capacity.
  - Start with bay 0, proceed to bay 1, and bay 2, and then bay 3.

  Note: Drives of different types and different capacities are allowed to be installed in one server, but not in the same RAID array. The drives in a single RAID array must be the same type and the same capacity. See https://pubs.lenovo.com/lxpm-v4/RAID_setup for more details.

Procedure

Step 1. Install a 3.5-inch or 2.5-inch drive to the retainer.

Note: To prevent from damaging the drive with static discharge, do not touch the circuit board on the bottom of the drive.

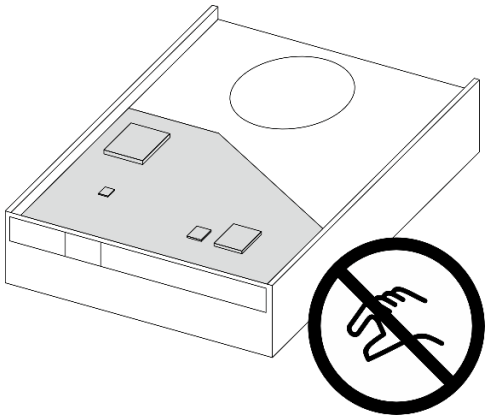

Figure 28. Circuit board on the drive

a. ❶ Slightly tear both sides of the retainer apart.

b. ❷ Align the four holes on the drive with the corresponding pins on the retainer; then, fit the drive into the retainer.

Note: The drive connectors should face the retainer handles.

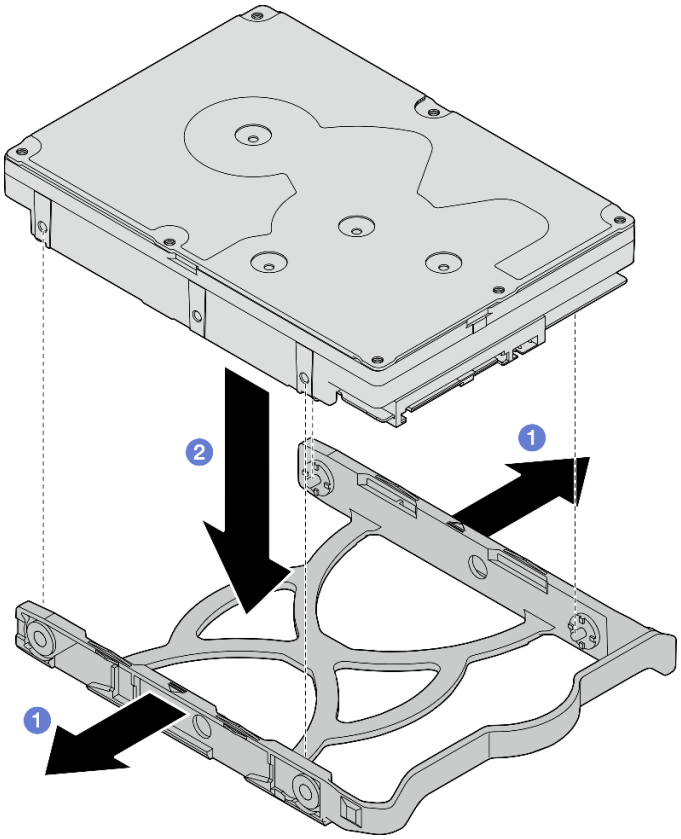

Figure 29. Installing a 3.5-inch drive into the retainer

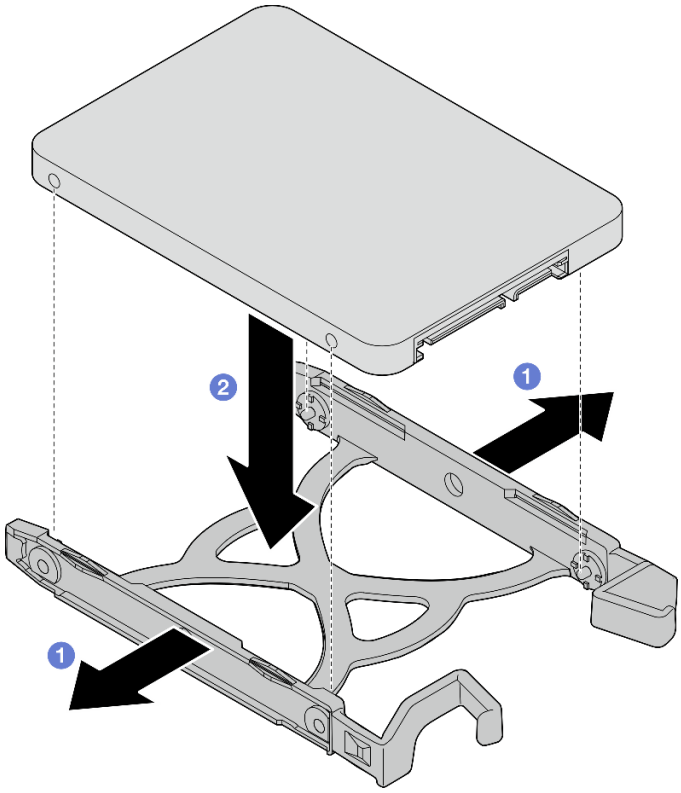

Figure 30. Installing a 2.5-inch drive into the retainer

Step 2. Face the retainer handles upward and push the drive assembly into the drive bay. Press the drive assembly firmly to ensure it is seated correctly.

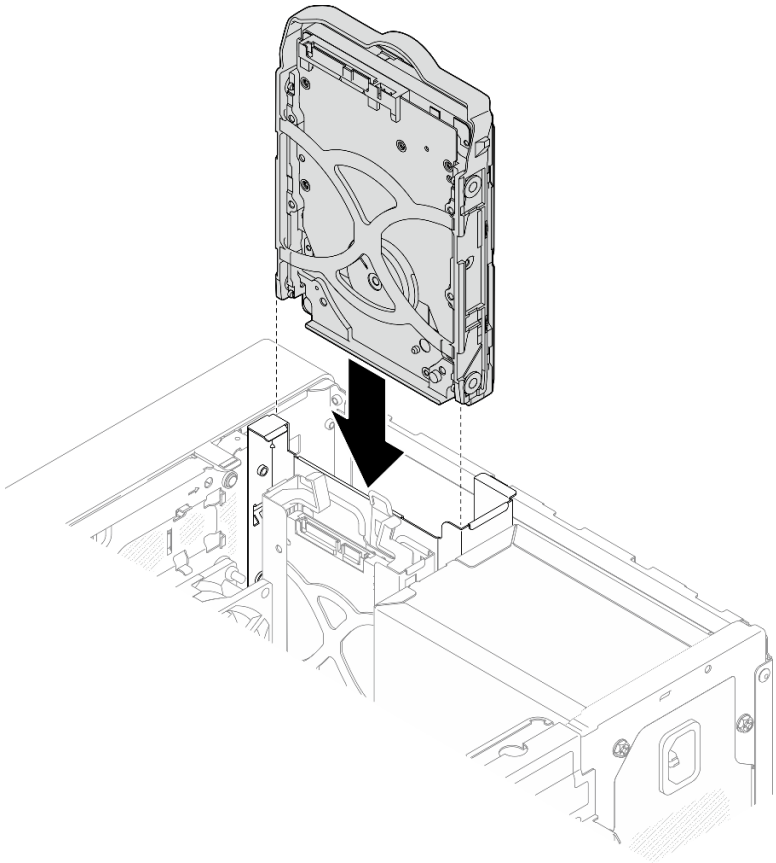

Figure 31. Install 3.5-inch drive assembly into drive bay 0

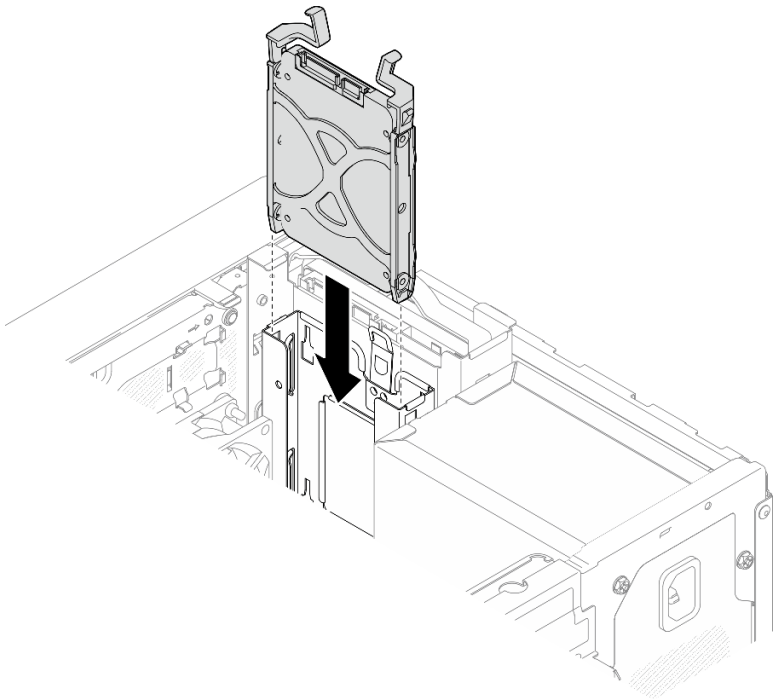

Figure 32. Install 2.5-inch drive assembly into drive bay 1

Step 3. Connect the signal and power cable to the system board. See Chapter 6 “Internal cable routing” on page 161.

After you finish

1. Complete the parts replacement. See “Complete the parts replacement” on page 159.
2. Check the drive activity LED on the front of the server to verify if the drives are operating correctly. See “Front view” on page 15 .
3. Use the Lenovo XClarity Provisioning Manager to configure the RAID if necessary. For more information, see https://pubs.lenovo.com/lxpm-v4/RAID_setup.

Demo video

Watch the procedure on YouTube

Remove the drive cage (bay 0-1)

Follow this procedure to remove the drive cage from bay 0 or bay 1.

S002

CAUTION:
The power-control button on the device and the power switch on the power supply do not turn off the electrical current supplied to the device. The device also might have more than one power cord. To remove all electrical current from the device, ensure that all power cords are disconnected from the power source.

About this task

Attention:

- Read “Installation Guidelines” on page 37 and “Safety inspection checklist” on page 38 to ensure that you work safely.
- Power off the server and peripheral devices and disconnect the power cords and all external cables. See “Power off the server” on page 43.
- If the server is in a rack, remove it from the rack. See “Remove the server from rack” on page 43.
- Remove any locking device that secures the server, such as a Kensington lock or a padlock.
- Place the server on its side with the cover up.

Procedure

Step 1. Make preparation for this task.

a. Remove the server cover. See “Remove the server cover” on page 154.

Attention: The heat sinks and processor could be very hot. To avoid burning yourself, wait for a few minutes after turning off the server before you remove the server cover.

b. Remove the simple-swap drive from drive bay 0 or drive bay 1. See “Remove a simple-swap drive (bay 0-1)” on page 53.

Step 2. Remove the bay 1 drive cage.

Note: Remove the bay 1 drive cage first; then, proceed to remove the bay 0 drive cage.

a. ❶ Slightly pull out the latch on the bay 1 drive cage to release it from the bay 0 drive cage.

b. ❷ Pull the bay 1 drive cage out from the chassis.

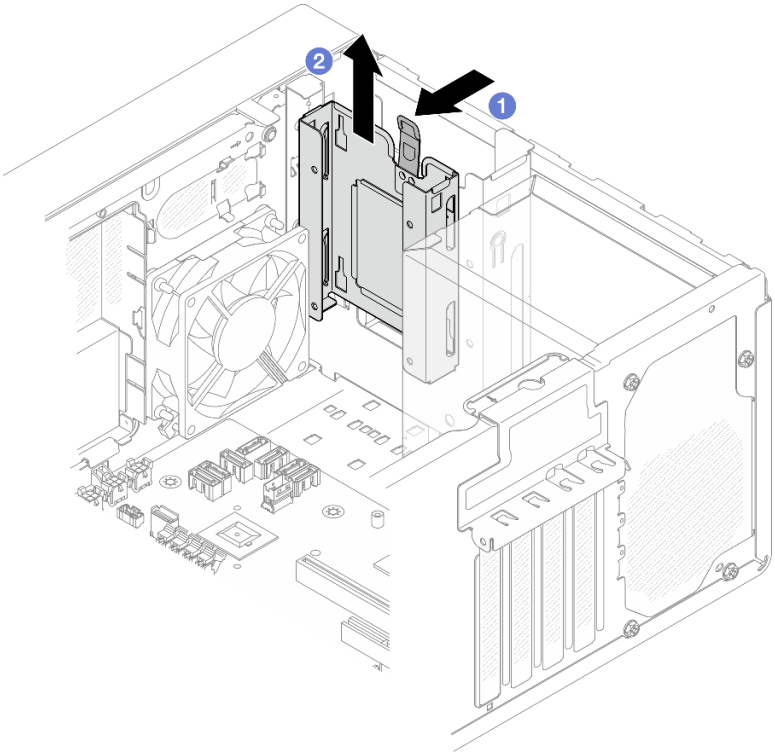

Figure 33. Removing drive cage from drive bay 1

Step 3. Remove the front bezel.

a. ❶ Release the three plastic tabs on the front bezel.

b. ❷ Rotate the front bezel to remove it from the chassis.

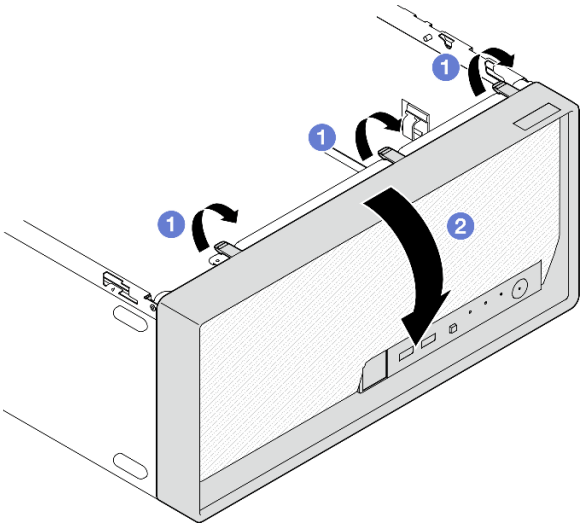

Figure 34. Removing the front bezel

Step 4. Remove the bay 0 drive cage.

a. ❶ From outside of the chassis, remove the screw that secures the bay 0 drive cage to the chassis.

b. ❷ From inside of the chassis, remove the screw that secures the bay 0 drive cage to the chassis.

c. ❸ Pull the bay 0 drive cage out from the chassis.

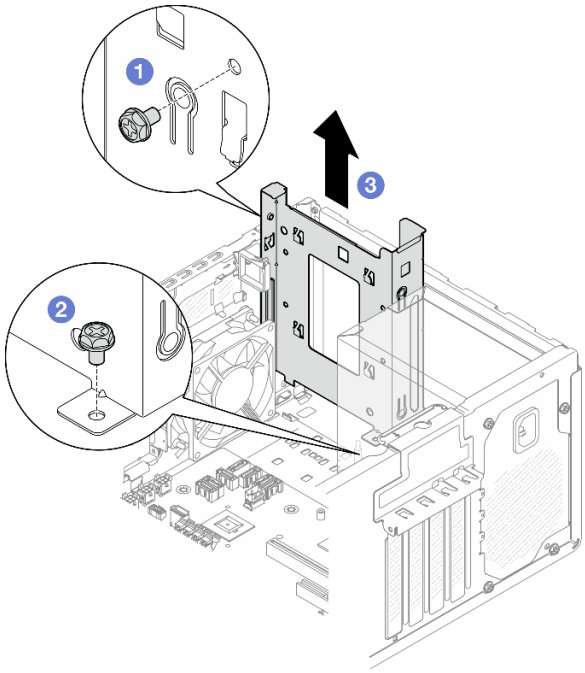

Figure 35. Removing drive cage from drive bay 0

After you finish

1. Install a new drive cage. See "Install the drive cage (bay 0-1)" on page 63.
2. If you are instructed to return the component or optional device, follow all packaging instructions, and use any packaging materials for shipping that are supplied to you.

Demo video

Watch the procedure on YouTube

Install the drive cage (bay 0-1)

Follow instructions in this section to install the bay 0 drive cage or bay 1 drive cage.

About this task

S002

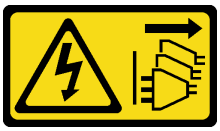

CAUTION:
The power-control button on the device and the power switch on the power supply do not turn off the electrical current supplied to the device. The device also might have more than one power cord. To remove all electrical current from the device, ensure that all power cords are disconnected from the power source.

Attention:

- Read "Installation Guidelines" on page 37 and "Safety inspection checklist" on page 38 to ensure that you work safely.

Procedure

Note: Install the bay 0 drive cage first; then, proceed to install the bay 1 drive cage.

Step 1. Install the bay 0 drive cage.

a. ❶ Align the bay 0 drive cage to the slots on chassis; then, install it into the chassis. Make sure the drive cage is seated correctly in the chassis.

b. ❷ From the inside of the chassis, fasten the screw that secures the bay 0 drive cage to the chassis.

c. ❸ From the outside of the chassis, fasten the screw that secures the bay 0 drive cage to the chassis.

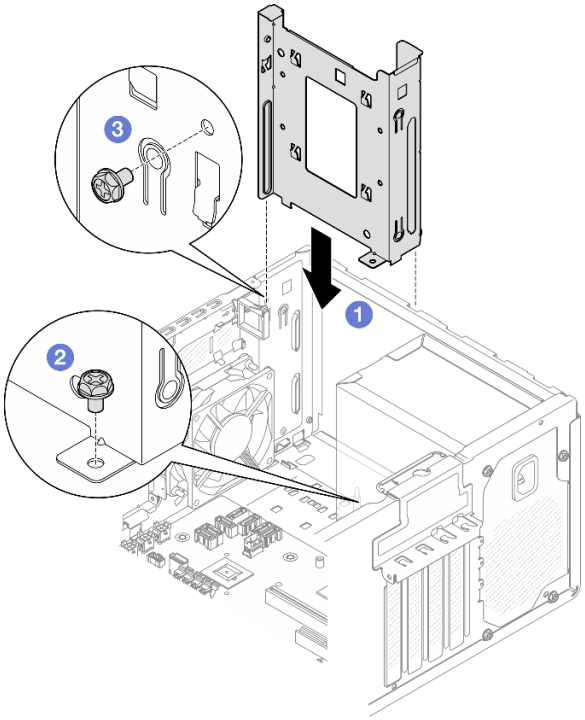

Figure 36. Installing drive cage to bay 0

Step 2. Install the front bezel.

a. ❶ Insert the three plastic tabs on the bottom of the front bezel with the corresponding slots on the front of the chassis.

b. ❷ Pivot the front bezel towards to chassis until it snaps into place.

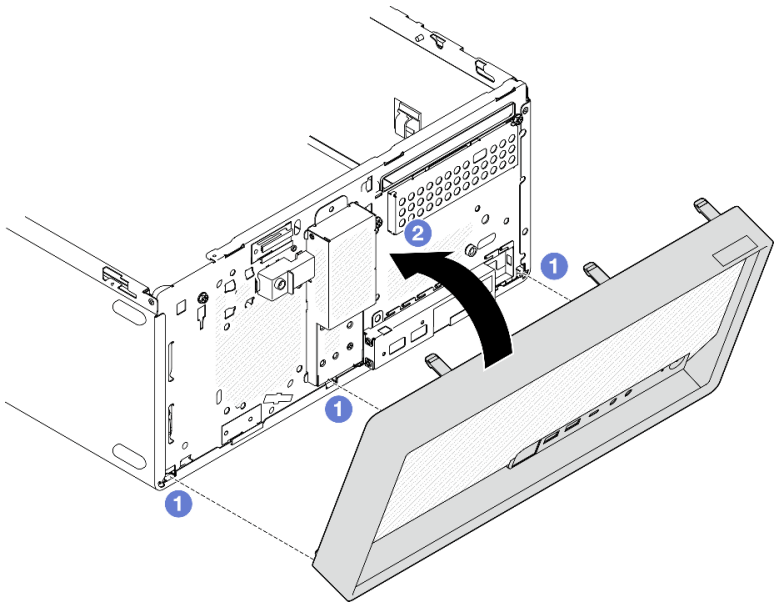

Figure 37. Installing the front bezel

Step 3. Install the bay 1 drive cage.

Align the four hooks on both drive cages, and attach bay 1 drive cage to bay 0 drive cage; then, slide the bay 1 drive cage downward until the four hooks on both drive cages are fully engaged. Make sure the latch on the bay 1 drive cage is also engaged with the hook on bay 0 drive cage.

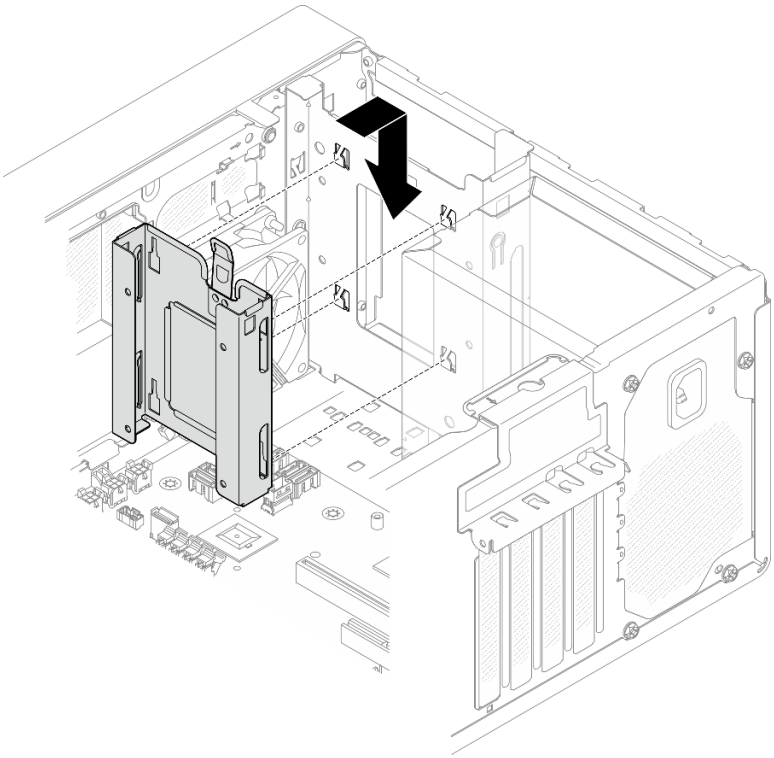

Figure 38. Installing the drive bay 1 cage

After you finish

1. Install simple-swap drives if necessary. See "Install a simple-swap drive (bay 0-1)" on page 56.
2. Install the server cover. See "Install the server cover" on page 157.
3. Complete the parts replacement. See "Complete the parts replacement" on page 159.

Demo video

Watch the procedure on YouTube

Simple-swap drive and drive cage replacement (bay 2)

Follow instructions in this section to remove and install a simple-swap drive or drive cage from and into bay 2.

Remove a simple-swap drive (bay 2)

Follow instructions in this section to remove a simple-swap drive from bay 2.

S002

CAUTION:
The power-control button on the device and the power switch on the power supply do not turn off the electrical current supplied to the device. The device also might have more than one power cord. To remove all electrical current from the device, ensure that all power cords are disconnected from the power source.

About this task

Attention:

- Read "Installation Guidelines" on page 37 and "Safety inspection checklist" on page 38 to ensure that you work safely.
- Power off the server and peripheral devices and disconnect the power cords and all external cables. See "Power off the server" on page 43.
- If the server is in a rack, remove it from the rack. See "Remove the server from rack" on page 43.
- Remove any locking device that secures the server, such as a Kensington lock or a padlock.
- Place the server on its side with the cover up.

Procedure

Step 1. Make preparation for this task.

a. Remove the server cover. See "Remove the server cover" on page 154.

Attention: The heat sinks and processor could be very hot. To avoid burning yourself, wait for a few minutes after turning off the server before you remove the server cover.

b. If applicable, remove the optical drive. See "Remove an optical drive" on page 83.

c. If applicable, remove the optical drive cage. See "Remove an optical drive cage" on page 89.

Step 2. Disconnect the cables from the drive assembly.

Step 3. Remove the 3.5-inch drive assembly.

a. ❶ Slide the drive retainer out from the drive cage.

b. ❷ Tear both sides of the retainer apart and remove the drive from the retainer.

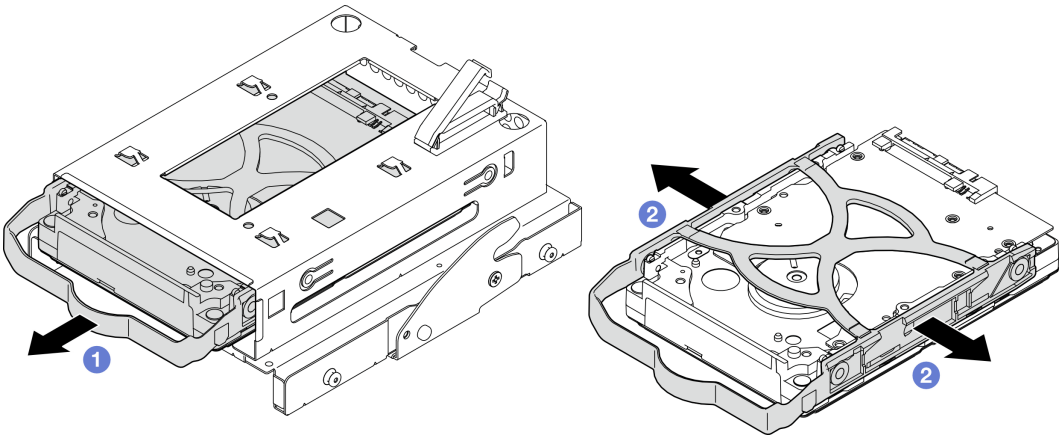

Figure 39. Removing the 3.5-inch drive assembly

Note: Depending on the configuration, the 3.5-inch drive may be the model in the illustration below.

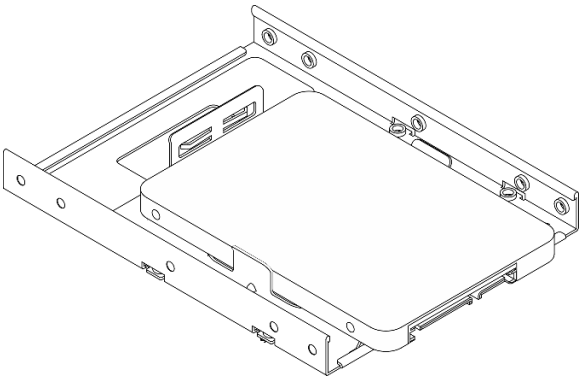

After you finish

1. Install a new 3.5-inch drive. See "Install a simple-swap drive (bay 2)" on page 68.
2. If you are instructed to return the component or optional device, follow all packaging instructions, and use any packaging materials for shipping that are supplied to you.

Demo video

Watch the procedure on YouTube

Install a simple-swap drive (bay 2)

Follow the instructions in this section to install a simple-swap drive to bay 2.

S002

CAUTION:
The power-control button on the device and the power switch on the power supply do not turn off the electrical current supplied to the device. The device also might have more than one power cord. To remove all electrical current from the device, ensure that all power cords are disconnected from the power source.

About this task

Attention:

- Read "Installation Guidelines" on page 37 and "Safety inspection checklist" on page 38 to ensure that you work safely.
- Touch the static-protective package that contains the component to any unpainted metal surface on the server; then, remove it from the package and place it on a static-protective surface.
- Make sure the type of drives to be installed is supported. Following are the types supported:
  - 3.5-inch simple-swap hard-disk drive or solid-state drive in drive bay 0, drive bay 2 and drive bay 3.
  - 2.5-inch simple-swap solid-state drive in drive bay 1.

  For a complete list of supported optional devices for the server, see https://serverproven.lenovo.com.
- If there are more than one drives to be installed, determine installation order based on the following rules:
  - Start with solid-state drives, and proceed with hard-disk drives.
  - When installing one 3.5-inch solid-state drive and one 3.5-inch hard-disk drive, install the solid-state drive in bay 0 and the hard-disk drive in bay 2.
  - Start with the drive with the lowest capacity.
  - Start with bay 0, proceed to bay 1, and bay 2, and then bay 3.

  Note: Drives of different types and different capacities are allowed to be installed in one server, but not in the same RAID array. The drives in a single RAID array must be the same type and the same capacity. See https://pubs.lenovo.com/lxpm-v4/RAID_setup for more details.

Procedure

Step 1. Install the 3.5-inch drive assembly to the drive cage.

Note: To prevent from damaging the drive with static discharge, do not touch the circuit board on the bottom of the drive.

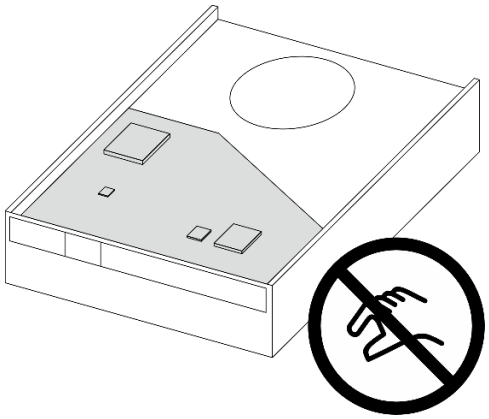

Figure 40. Circuit board on the drive

a. ❶ Slightly tear both sides of the retainer apart.

Attention: Position the drive connectors on the opposite side of the retainer handles.

b. ❷ Align the four holes on the drive with the corresponding pins on the retainer; then, fit the drive into the retainer.

c. ❸ Slide the drive into the drive cage.

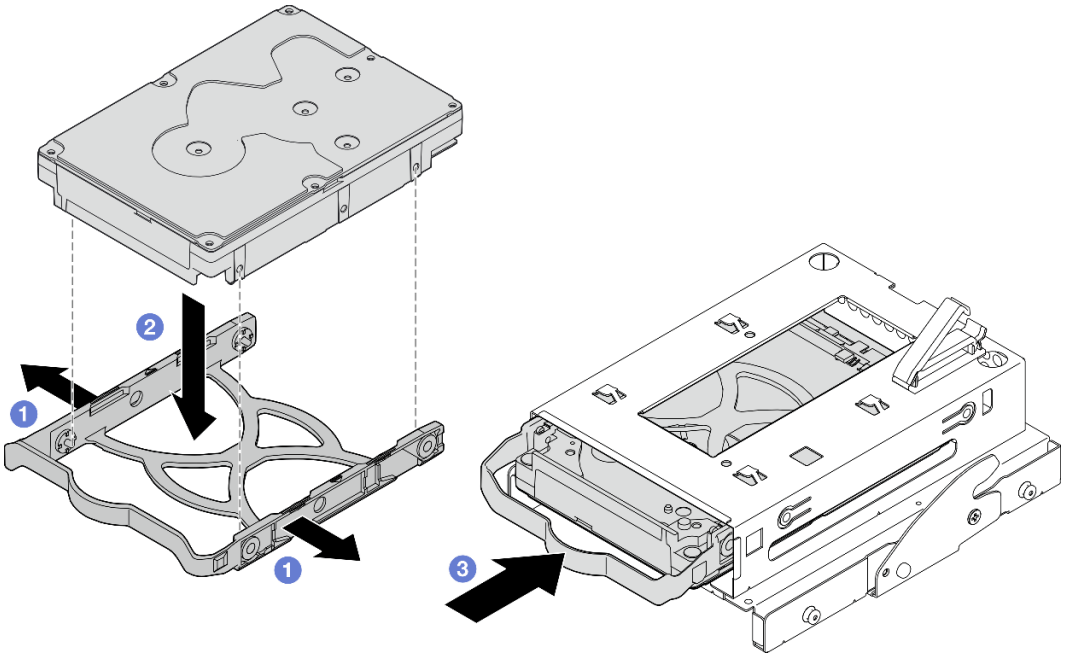

Figure 41. Installing a 3.5-inch drive to the drive cage

Attention: If you are installing a 3.5-inch drive as the model in the illustration below:

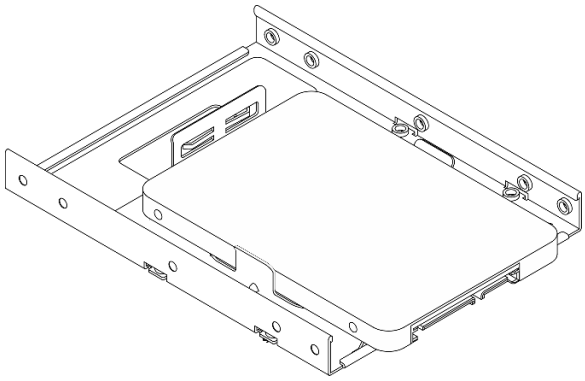

Make sure the screw holes that are nearest to the drive connector are **outside** of the drive retainer.

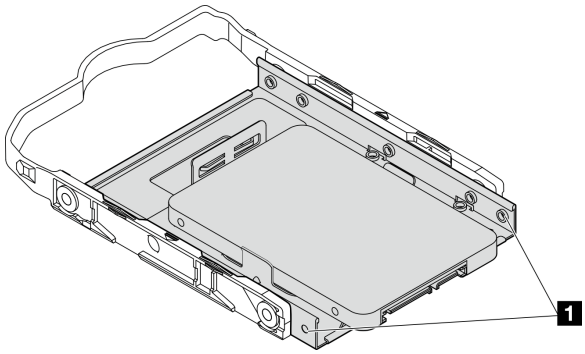

Figure 42. Drive screw hole placement on retainer

1 Screw holes nearest to the drive connector

After you finish

1. Install the optical drive cage. See "Install the optical drive cage" on page 90.
2. Install the optical drive. See "Install an optical drive" on page 86.
3. Connect the signal and power cable to the drive assembly. See Chapter 6 "Internal cable routing" on page 161.
4. Install the server cover. See "Install the server cover" on page 157.
5. Complete the parts replacement. See "Complete the parts replacement" on page 159.
6. Check the drive activity LED on the front of the server to verify if the drives are operating correctly. See "Front view" on page 15 .
7. Use the Lenovo XClarity Provisioning Manager to configure the RAID if necessary. For more information, see https://pubs.lenovo.com/lxpm-v4/RAID_setup.

Demo video

Watch the procedure on YouTube

Remove the drive cage (bay 2)

Follow instructions in this section to remove a simple-swap drive cage from bay 2.

About this task

S002

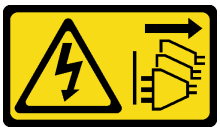

CAUTION:
The power-control button on the device and the power switch on the power supply do not turn off the electrical current supplied to the device. The device also might have more than one power cord. To remove all electrical current from the device, ensure that all power cords are disconnected from the power source.

Attention:

- Read "Installation Guidelines" on page 37 and "Safety inspection checklist" on page 38 to ensure that you work safely.
- Power off the server and peripheral devices and disconnect the power cords and all external cables. See "Power off the server" on page 43.
- If the server is in a rack, remove it from the rack. See "Remove the server from rack" on page 43.
- Remove any locking device that secures the server, such as a Kensington lock or a padlock.
- Place the server on its side with the cover up.

Procedure

Step 1. Make preparation for this task.

a. Remove the server cover. See "Remove the server cover" on page 154.

Attention: The heat sinks and processor could be very hot. To avoid burning yourself, wait for a few minutes after turning off the server before you remove the server cover.

b. If applicable, remove the optical drive. See "Remove an optical drive" on page 83.

c. Remove the optical drive cage. See "Remove an optical drive cage" on page 89.

d. If applicable, remove the 3.5-inch drive from the drive cage. See "Remove a simple-swap drive (bay 2)" on page 66.

Step 2. Remove the 3.5-inch drive cage from the optical drive cage.

a. ❶ Remove the screw that secures the 3.5-inch drive cage to the optical drive cage. Reserve the screw to be used for reinstalling the 3.5-inch drive cage.

b. ❷ Slide the optical drive cage to separate it from the 3.5-inch drive cage.

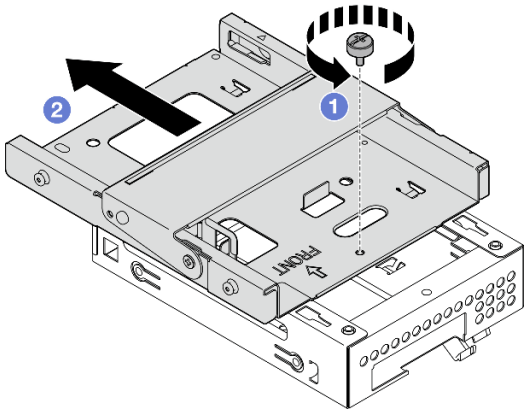

Figure 43. Removing the 3.5-inch drive cage from the optical drive cage

After you finish

1. Install a new 3.5-inch drive cage. See "Install the drive cage (bay 2)" on page 73.
2. If you are instructed to return the component or optional device, follow all packaging instructions, and use any packaging materials for shipping that are supplied to you.

Demo video

Watch the procedure on YouTube

Install the drive cage (bay 2)

Follow this procedure to install the drive cage to bay 2.

S002

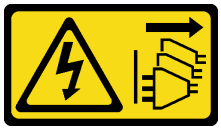

CAUTION:
The power-control button on the device and the power switch on the power supply do not turn off the electrical current supplied to the device. The device also might have more than one power cord. To remove all electrical current from the device, ensure that all power cords are disconnected from the power source.

About this task

Attention:

- Read "Installation Guidelines" on page 37 and "Safety inspection checklist" on page 38 to ensure that you work safely.

- Touch the static-protective package that contains the component to any unpainted metal surface on the server; then, remove it from the package and place it on a static-protective surface.

Procedure

Step 1. **(Optional)** Install the EMI shielding included in the component packaging to the chassis.

Note: Installing the EMI shielding is required when the original shielding slot on the chassis is vacant.

a. ❶ Insert the tabs on the left end of the EMI shielding into the shield slot on the chassis.

b. ❷ Push the EMI shielding into the chassis until it snaps into place.

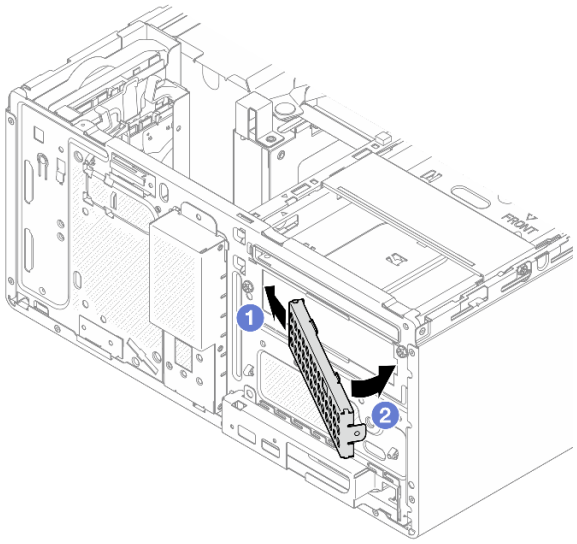

Figure 44. Installing the EMI shielding

Step 2. Make sure there is no optical drive installed on the optical drive cage. Then, install the 3.5-inch drive cage to the optical drive cage.

a. ❶ Align the four hooks on the optical drive cage with the corresponding hooks on the 3.5-inch drive cage; then, lower the optical drive cage onto the 3.5-inch drive cage, and slide the optical drive forward until it secures into place.

Note: Make sure the four hooks on both drive cages are fully engaged.

b. ❷ Fasten the captive screw to secure the two drive cages together.

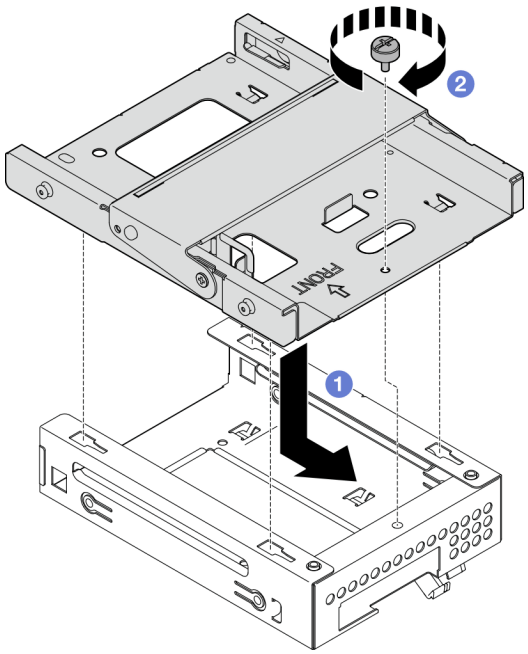

Figure 45. Installing the 3.5-inch drive cage to the optical drive cage

After you finish

1. If applicable, install the 3.5-inch drive to the drive cage. See "Install a simple-swap drive (bay 2)" on page 68.
2. Install the optical drive cage. See "Install the optical drive cage" on page 90.
3. If applicable, install the optical drive. See "Install an optical drive" on page 86.
4. Install the server cover. See "Install the server cover" on page 157.
5. Complete the parts replacement. See "Complete the parts replacement" on page 159.

Demo video

Watch the procedure on YouTube

Simple-swap drive and drive cage replacement (bay 3)

Follow instructions in this section to remove and install a simple-swap drive or drive cage from and into bay 3.

Remove a simple-swap drive (bay 3)

Follow instructions in this section to remove a simple-swap drive from bay 3.

S002

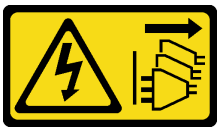

CAUTION:
The power-control button on the device and the power switch on the power supply do not turn off the electrical current supplied to the device. The device also might have more than one power cord. To remove all electrical current from the device, ensure that all power cords are disconnected from the power source.

About this task

Attention:

- Read "Installation Guidelines" on page 37 and "Safety inspection checklist" on page 38 to ensure that you work safely.
- Power off the server and peripheral devices and disconnect the power cords and all external cables. See "Power off the server" on page 43.
- If the server is in a rack, remove it from the rack. See "Remove the server from rack" on page 43.
- Remove any locking device that secures the server, such as a Kensington lock or a padlock.
- Place the server on its side with the cover up.

Procedure

Step 1. Make preparation for this task.

a. Remove the server cover. See "Remove the server cover" on page 154.

Attention: The heat sinks and processor could be very hot. To avoid burning yourself, wait for a few minutes after turning off the server before you remove the server cover.

b. Remove the drive cage (bay 3). See "Remove the drive cage (bay 3)" on page 79.

Step 2. Disconnect the cables from the drive assembly.

Step 3. Remove the 3.5-inch drive assembly.

a. ❶ Slide the drive retainer out from the drive cage.

b. ❷ Tear both sides of the retainer apart and remove the drive from the retainer.

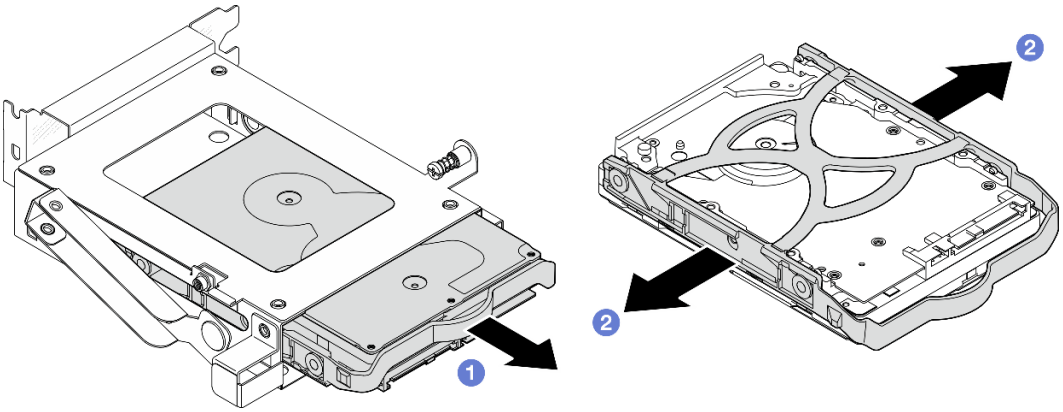

Figure 46. Removing the 3.5-inch drive assembly

Note: Depending on the configuration, the 3.5-inch drive may be the model in the illustration below.

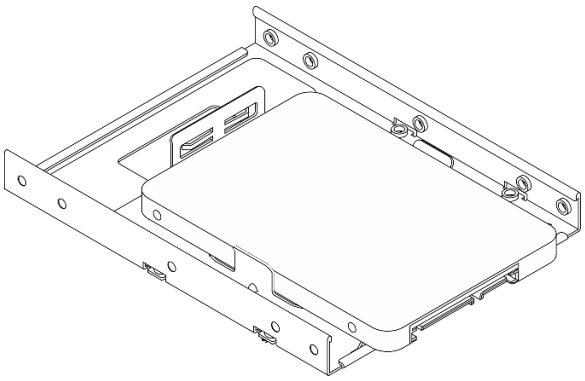

After you finish

1. Install a replacement unit. See "Install a simple-swap drive (bay 3)" on page 77.
2. If you are instructed to return the component or optional device, follow all packaging instructions, and use any packaging materials for shipping that are supplied to you.

Demo video

Watch the procedure on YouTube

Install a simple-swap drive (bay 3)

Follow instructions in this section to install a simple-swap drive to bay 3.

S002

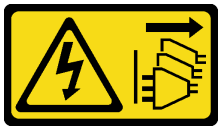

CAUTION:
The power-control button on the device and the power switch on the power supply do not turn off the electrical current supplied to the device. The device also might have more than one power cord. To remove all electrical current from the device, ensure that all power cords are disconnected from the power source.

About this task

Attention:

- Read "Installation Guidelines" on page 37 and "Safety inspection checklist" on page 38 to ensure that you work safely.
- Touch the static-protective package that contains the component to any unpainted metal surface on the server; then, remove it from the package and place it on a static-protective surface.

Procedure

Note: To prevent from damaging the drive with static discharge, do not touch the circuit board on the bottom of the drive.

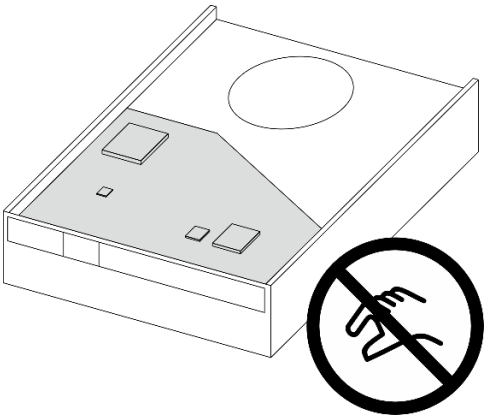

Figure 47. Circuit board on the drive

Step 1. ❶ Slightly tear both sides of the retainer apart.

Step 2. ❷ Align the four holes on the drive with the corresponding pins on the retainer; then, fit the drive into the retainer.

Note: The drive connectors should face the retainer handles.

Step 3. ❸ Slide the drive into the drive cage.

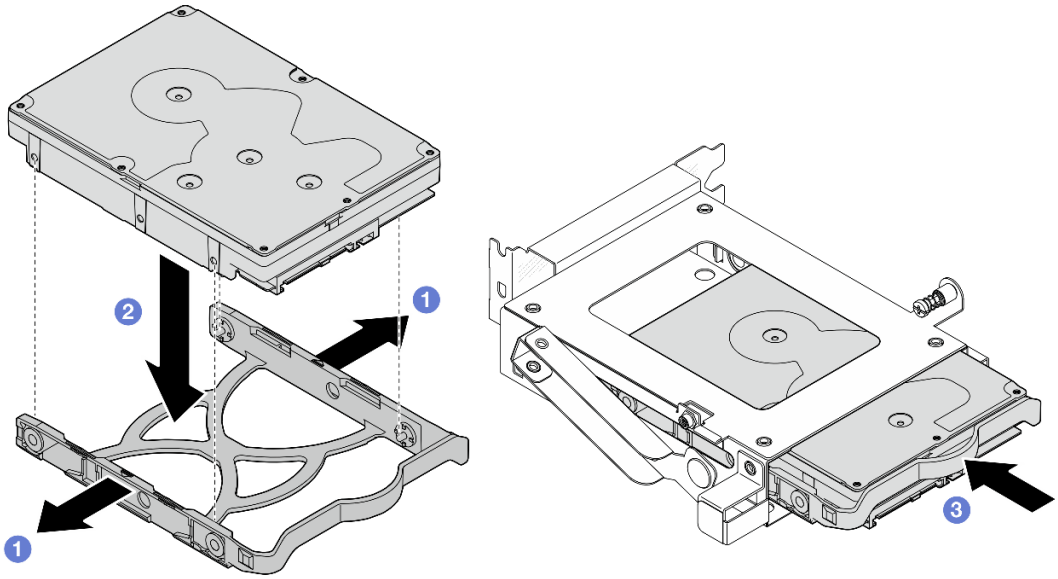

Figure 48. Installing a 3.5-inch drive to the drive cage

After you finish

1. Install the drive cage 3. See "Install the drive cage (bay 3)" on page 81.
2. Connect the signal and power cable to the drive assembly. See Chapter 6 "Internal cable routing" on page 161.
3. Install the server cover. See "Install the server cover" on page 157.
4. Complete the parts replacement. See "Complete the parts replacement" on page 159.
5. Check the drive activity LED on the front of the server to verify if the drives are operating correctly. See "Front view" on page 15 .

6. Use the Lenovo XClarity Provisioning Manager to configure the RAID if necessary. For more information, see https://pubs.lenovo.com/lxpm-v4/RAID_setup.

Demo video

Watch the procedure on YouTube

Remove the drive cage (bay 3)

Follow instructions in this section to remove a drive cage from bay 3.

About this task

S002

CAUTION:
The power-control button on the device and the power switch on the power supply do not turn off the electrical current supplied to the device. The device also might have more than one power cord. To remove all electrical current from the device, ensure that all power cords are disconnected from the power source.

Attention:

- Read "Installation Guidelines" on page 37 and "Safety inspection checklist" on page 38 to ensure that you work safely.
- Power off the server and peripheral devices and disconnect the power cords and all external cables. See "Power off the server" on page 43.
- If the server is in a rack, remove it from the rack. See "Remove the server from rack" on page 43.
- Remove any locking device that secures the server, such as a Kensington lock or a padlock.
- Place the server on its side with the cover up.

Procedure

Step 1. Make preparation for this task.

a. Remove the server cover. See "Remove the server cover" on page 154.

Attention: The heat sinks and processor could be very hot. To avoid burning yourself, wait for a few minutes after turning off the server before you remove the server cover.

Step 2. Disconnect the cables from the drive assembly.

Step 3. Release the latch of drive cage 3.

a. ❶ Loosen the screw that secures the latch to the cage bar. Reserve the screw to be used for reinstalling the drive cage.

b. ❷ Rotate the latch away from the cage bar.

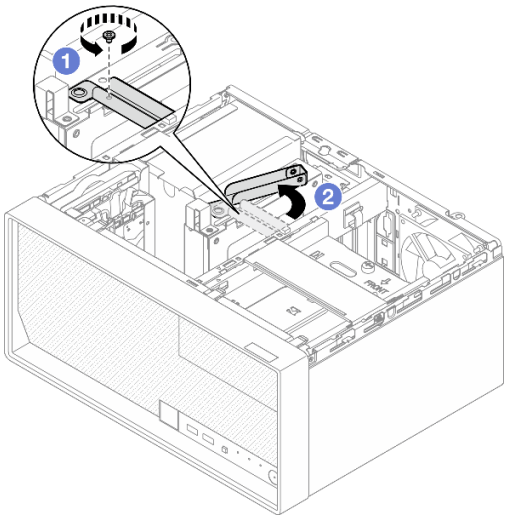

Figure 49. Releasing the latch of drive cage 3

Step 4. Remove the 3.5-inch drive cage from the PCIe sot 3.

a. ❸ Remove the screw that secures the drive cage.

b. ❹ Rotate the retaining clip to the open position as illustrated.

c. ❺ Hold the drive cage by both edges, and gently lift if out from the PCIe slot.

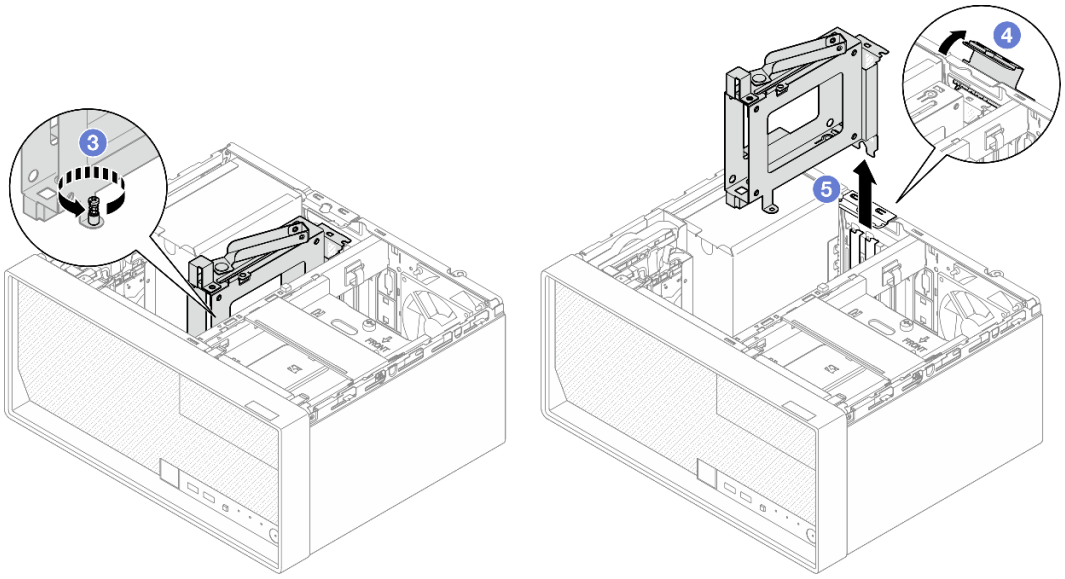

Figure 50. Removing the 3.5-inch drive cage from the PCIe sot 3

After you finish

1. Remove the installed drives from the drive cage and set them aside on a static-protective surface. See "Remove a simple-swap drive (bay 3)" on page 75.
2. Install a replacement unit. See "Install the drive cage (bay 3)" on page 81.
3. If you are instructed to return the component or optional device, follow all packaging instructions, and use any packaging materials for shipping that are supplied to you.

Demo video

Watch the procedure on YouTube

Install the drive cage (bay 3)

Follow instructions in this section to install a drive cage to bay 3.

About this task

S002

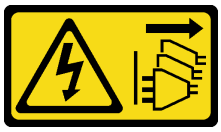

CAUTION:
The power-control button on the device and the power switch on the power supply do not turn off the electrical current supplied to the device. The device also might have more than one power cord. To remove all electrical current from the device, ensure that all power cords are disconnected from the power source.

Attention:

- Read "Installation Guidelines" on page 37 and "Safety inspection checklist" on page 38 to ensure that you work safely.
- Touch the static-protective package that contains the component to any unpainted metal surface on the server; then, remove it from the package and place it on a static-protective surface.

Procedure

Step 1. Make preparation for this task.

a. Install the drive into the drive cage. See "Install a simple-swap drive (bay 3)" on page 77.

Step 2. Install the drive cage on PCIe slot 3.

a. ❶ Align the drive cage to the slot; then, gently press both ends of the drive cage until it is securely seated in the slot.

b. ❷ Rotate the retaining clip towards the chassis until it snaps into locked position.

c. ❸ Tighten the screw to secure the drive cage on the PCIe slot.

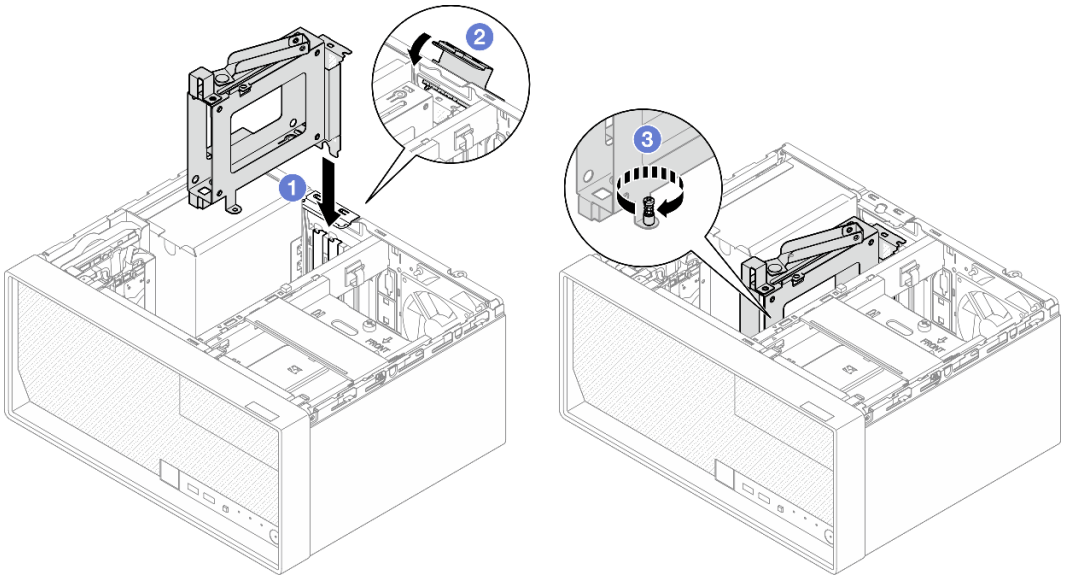

Figure 51. Installing the drive cage on PCIe slot 3

Step 3. Secure the drive cage on PCIe slot 3.

a. ❹ Remove the screw located on the latch.

Note: Only proceed this step in the case of replacing the drive cage to a new one.

b. ❺ Rotate the latch towards the cage bar.

c. ❻ Fasten the screw on the latch to secure the drive cage.

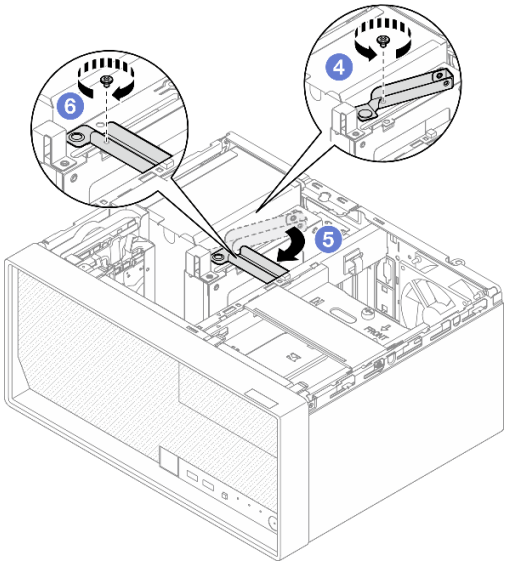

Figure 52. Securing the drive cage on PCIe slot 3

Step 4. Reconnect the cables to the drive assembly. See Chapter 6 “Internal cable routing” on page 161.

After you finish

1. Install the server cover. See “Install the server cover” on page 157.

2. Complete the parts replacement. See “Complete the parts replacement” on page 159.

Demo video

Watch the procedure on YouTube

Optical drive and drive cage replacement

Follow this procedure to remove and install an optical drive and optical drive cage.

Remove an optical drive

Follow instructions in this section to remove an optical drive.

S002

CAUTION:
The power-control button on the device and the power switch on the power supply do not turn off the electrical current supplied to the device. The device also might have more than one power cord. To remove all electrical current from the device, ensure that all power cords are disconnected from the power source.

About this task

Attention:

- Read “Installation Guidelines” on page 37 and “Safety inspection checklist” on page 38 to ensure that you work safely.
- Power off the server and peripheral devices and disconnect the power cords and all external cables. See “Power off the server” on page 43.
- If the server is in a rack, remove it from the rack. See “Remove the server from rack” on page 43.
- Remove any locking device that secures the server, such as a Kensington lock or a padlock.
- Place the server on its side with the cover up.

Procedure

Step 1. Make preparation for this task.

a. Remove the server cover. See “Remove the server cover” on page 154.

Attention: The heat sinks and processor could be very hot. To avoid burning yourself, wait for a few minutes after turning off the server before you remove the server cover.

Step 2. Disconnect the cables from the optical drive.

Step 3. Remove the optical drive from the optical drive cage.

a. ❶ Press the latch on the optical drive to release it from the optical drive cage.

b. ❷ Slide out the optical drive from the chassis.

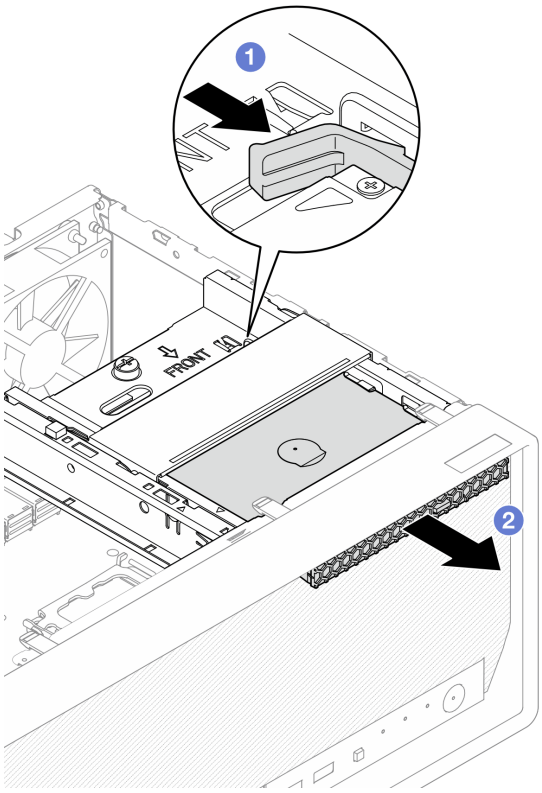

Figure 53. Removing the optical drive

Step 4. **(Optional)** Remove the optical drive retainer.

a. ❶ Pull out the retainer to disengage it from the optical drive.

b. ❷ Slide the retainer downward, and remove it from the optical drive.

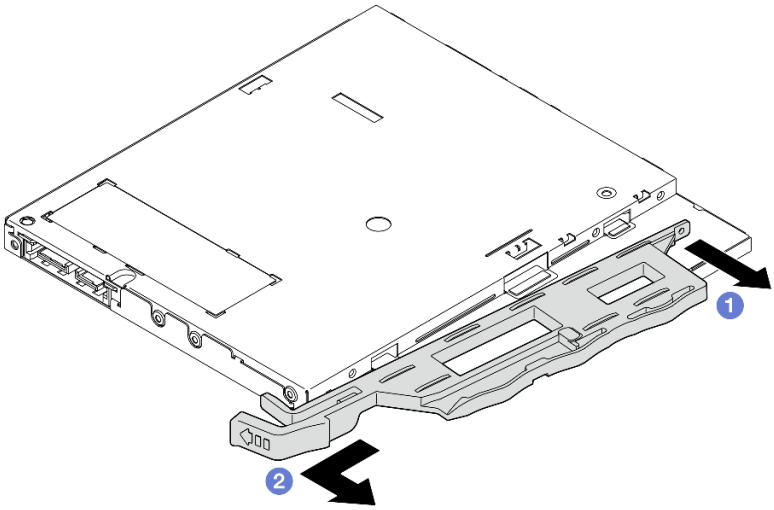

Figure 54. Removing optical drive retainer

Step 5. **(Optional)** Pull the optical drive bezel away to remove it from the optical drive.

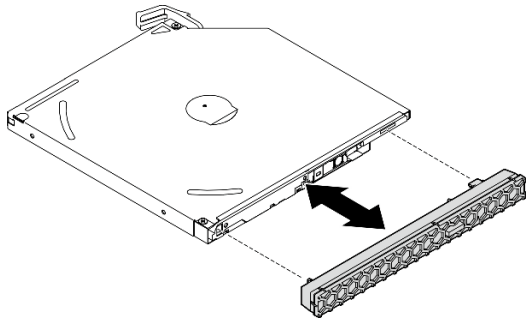

Figure 55. Removing the optical drive bezel

After you finish

1. Install a replacement unit. See "Install an optical drive" on page 86.
2. If no optical drive is to be installed, install the optical drive bay shield back to front bezel.
   a. ❶ Engage the bottom of the shield to the opening on the front bezel.
   b. ❷ Pivot the shield towards the front bezel until it snaps into place.

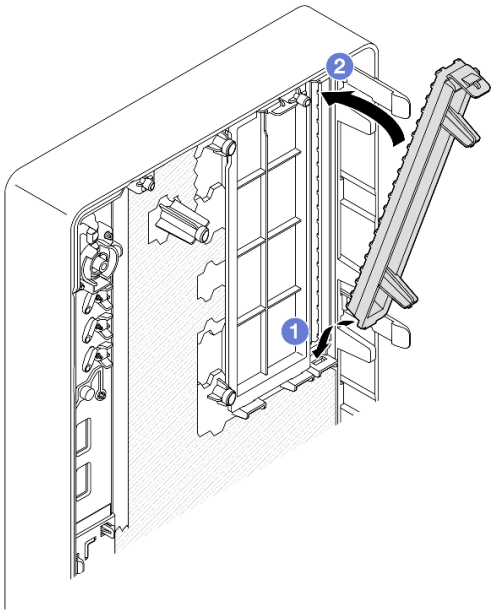

Figure 56. Installing the optical drive bay shield

3. If you are instructed to return the component or optional device, follow all packaging instructions, and use any packaging materials for shipping that are supplied to you.

Demo video

Watch the procedure on YouTube

Install an optical drive

Follow instructions in this section to install an optical drive.

S002

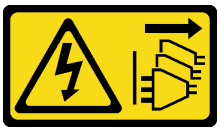

CAUTION:
The power-control button on the device and the power switch on the power supply do not turn off the electrical current supplied to the device. The device also might have more than one power cord. To remove all electrical current from the device, ensure that all power cords are disconnected from the power source.

S006

CAUTION:
When laser products (such as CD-ROMs, DVD drives, fiber optic devices, or transmitters) are installed, note the following:

- **Do not remove the covers. Removing the covers of the laser product could result in exposure to hazardous laser radiation. There are no serviceable parts inside the device.**
- **Use of controls or adjustments or performance of procedures other than those specified herein might result in hazardous radiation exposure.**

About this task

Attention:

- Read “Installation Guidelines” on page 37 and “Safety inspection checklist” on page 38 to ensure that you work safely.
- Touch the static-protective package that contains the component to any unpainted metal surface on the server; then, remove it from the package and place it on a static-protective surface.

Procedure

Step 1. If the optical drive bay shield is installed on the front bezel, remove it from the front bezel. To remove the front bezel, see “Remove the front bezel” on page 97.

a. ❶ Press the release tab on top of the drive bay shield.

b. ❶ Rotate the drive bay shield and remove it from the front bezel.

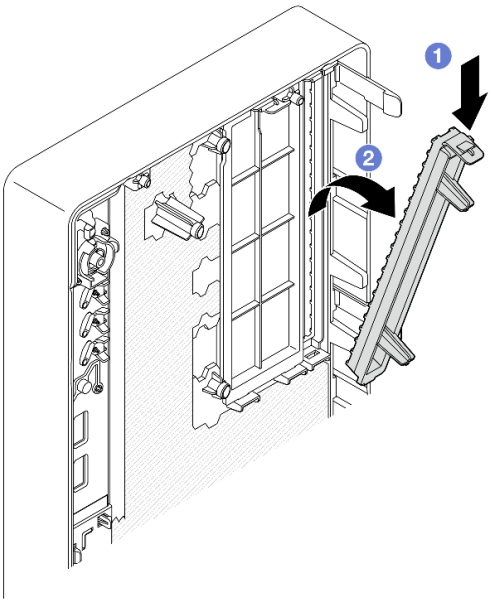

Figure 57. Removing the optical drive bay shield

Step 2. **(Optional)** Install the optical drive retainer.

a. ❶ Align the pin on the bottom of the retainer and the corresponding slot on the optical drive; then, insert the pin into the slot.

b. ❷ Insert the rest two pins on the retainer to the corresponding slots on the optical drive.

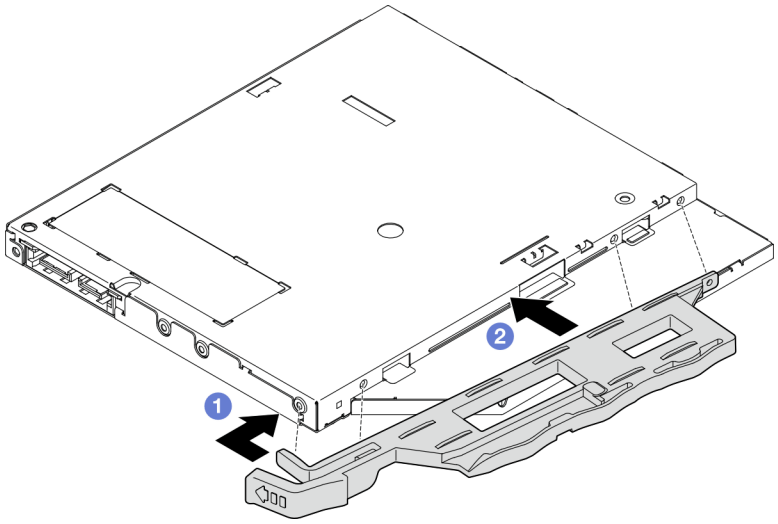

Figure 58. Installing the retainer to the optical drive

Step 3. **(Optional)** Align the optical drive bezel with the slots on the optical drive; then, insert the bezel into the optical drive.

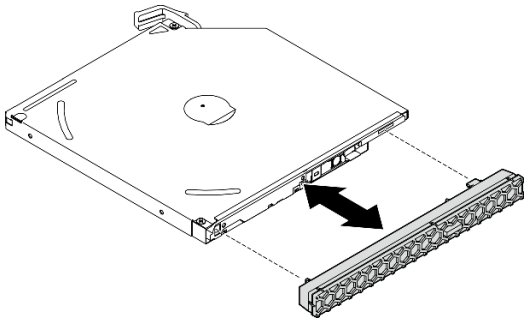

Figure 59. Installing the optical drive bezel

Step 4. Install the optical drive.

a. ❶ From outside of the chassis, insert the optical drive into the chassis.

b. ❷ Slide the optical drive inward until the latch snaps into place.

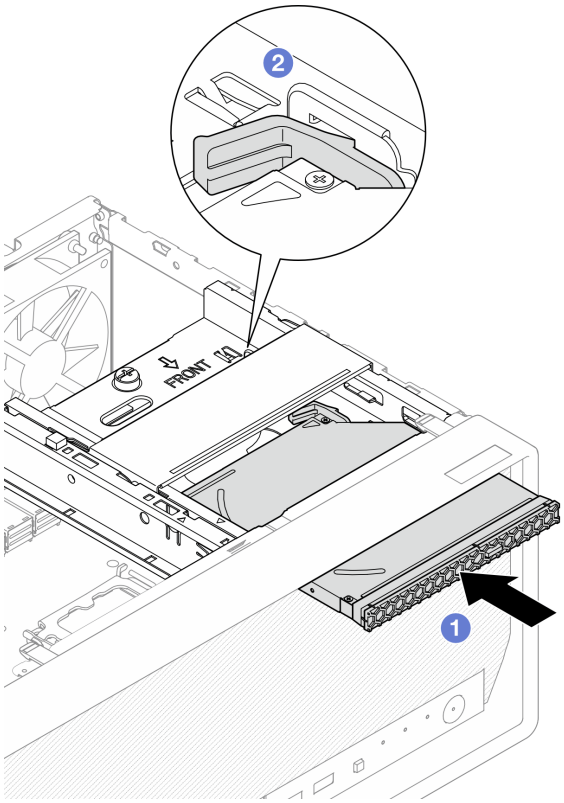

Figure 60. Installing the optical drive

Step 5. Connect the signal and power cable to the optical drive. See Chapter 6 “Internal cable routing” on page 161.

After you finish

1. Install the server cover. See “Install the server cover” on page 157.
2. Complete the parts replacement. See “Complete the parts replacement” on page 159.

Demo video

Watch the procedure on YouTube

Remove an optical drive cage

Follow instructions in this section to remove the optical drive cage.

S002

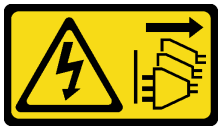

CAUTION:
The power-control button on the device and the power switch on the power supply do not turn off the electrical current supplied to the device. The device also might have more than one power cord. To remove all electrical current from the device, ensure that all power cords are disconnected from the power source.

About this task

Attention:

- Read "Installation Guidelines" on page 37 and "Safety inspection checklist" on page 38 to ensure that you work safely.
- Power off the server and peripheral devices and disconnect the power cords and all external cables. See "Power off the server" on page 43.
- If the server is in a rack, remove it from the rack. See "Remove the server from rack" on page 43.
- Remove any locking device that secures the server, such as a Kensington lock or a padlock.
- Place the server on its side with the cover up.

Procedure

Step 1. Make preparation for this task.

a. Remove the server cover. See "Remove the server cover" on page 154.

Attention: The heat sinks and processor could be very hot. To avoid burning yourself, wait for a few minutes after turning off the server before you remove the server cover.

b. If applicable, remove the optical drive. See "Remove an optical drive" on page 83.

Step 2. If applicable, disconnect all the cables from the 3.5-inch drive assembly.

Step 3. Remove the optical drive cage from the chassis.

a. ❶ Rotate the handle on the optical drive cage.

b. ❷ Lift the optical drive cage out from the chassis.

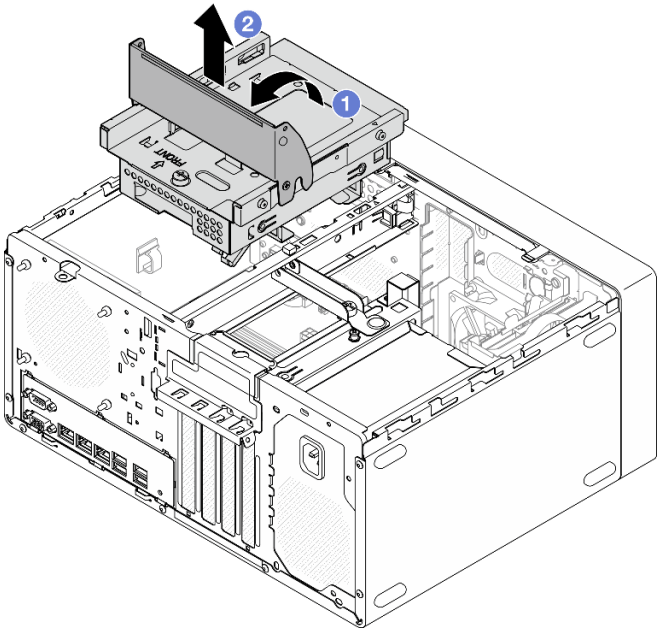

Figure 61. Removing the optical drive cage

After you finish

1. If applicable, replace the 3.5-inch drive cage or replace the 3.5-inch drive assembly. See "Simple-swap drive and drive cage replacement (bay 2)" on page 66.
2. Install a replacement unit. See "Install the optical drive cage" on page 90.
3. If you are instructed to return the component or optional device, follow all packaging instructions, and use any packaging materials for shipping that are supplied to you.

Demo video

Watch the procedure on YouTube

Install the optical drive cage

Follow instructions in this section to install the optical drive cage.

S002

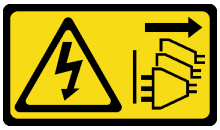

CAUTION:
The power-control button on the device and the power switch on the power supply do not turn off the electrical current supplied to the device. The device also might have more than one power cord. To remove all electrical current from the device, ensure that all power cords are disconnected from the power source.

S006

CAUTION:
When laser products (such as CD-ROMs, DVD drives, fiber optic devices, or transmitters) are installed, note the following:

- **Do not remove the covers. Removing the covers of the laser product could result in exposure to hazardous laser radiation. There are no serviceable parts inside the device.**
- **Use of controls or adjustments or performance of procedures other than those specified herein might result in hazardous radiation exposure.**

About this task

Attention:

- Read "Installation Guidelines" on page 37 and "Safety inspection checklist" on page 38 to ensure that you work safely.

Procedure

Step 1. Make sure the cage bar is installed in the chassis. To install the cage bar, see "Install the server cover" on page 157.

Step 2. If applicable, install the 3.5-inch drive assembly to the optical drive cage. See "Install a simple-swap drive (bay 2)" on page 68.

Step 3. Install the optical drive cage.

a. ❶ Align the four pins on the sides of the optical drive cage with the four slots on the chassis and cage bar; then, lower the optical drive cage into the chassis.

b. ❷ Ensure the optical drive cage is seated correctly; then, rotate the optical drive cage handle toward the front of the chassis to secure the optical drive cage into place.

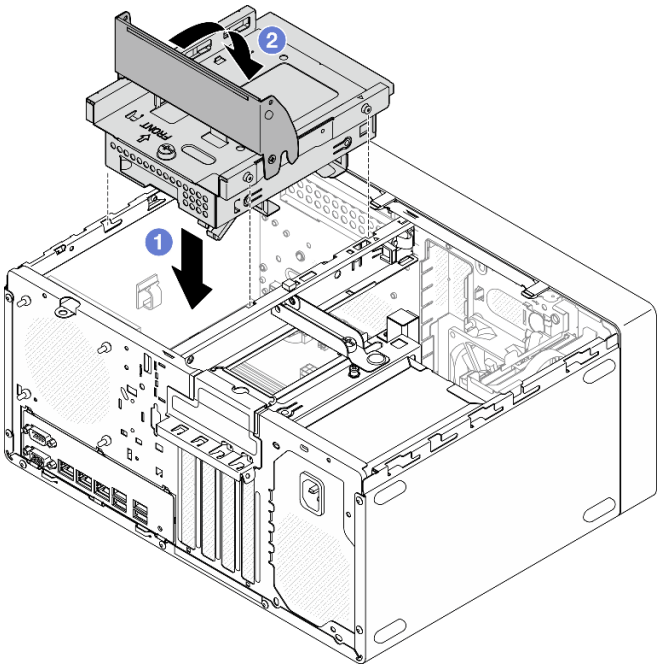

Figure 62. Installing the optical drive cage

Procedure

1. If applicable, install the optical drive. See "Install an optical drive" on page 86.
2. Connect the signal and power cables to 3.5-inch drive assembly and optical drive. See Chapter 6 "Internal cable routing" on page 161.
3. Install the server cover. See "Install the server cover" on page 157.
4. Complete the parts replacement. See "Complete the parts replacement" on page 159.

Demo video

Watch the procedure on YouTube

Fan replacement

Follow instructions in this section to remove and install the front fan or rear fan.

Note: For heat sink and fan module replacement, see "Heat sink and fan module replacement (trained technician only)" on page 99

Remove the fan (front and rear)

Follow instructions in this section to remove the front fan and rear fan.

About this task

S002

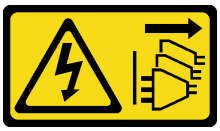

CAUTION:
The power-control button on the device and the power switch on the power supply do not turn off the electrical current supplied to the device. The device also might have more than one power cord. To remove all electrical current from the device, ensure that all power cords are disconnected from the power source.

Attention:

- Read "Installation Guidelines" on page 37 and "Safety inspection checklist" on page 38 to ensure that you work safely.
- Power off the server and peripheral devices and disconnect the power cords and all external cables. See "Power off the server" on page 43.
- If the server is in a rack, remove it from the rack. See "Remove the server from rack" on page 43.
- Remove any locking device that secures the server, such as a Kensington lock or a padlock.
- Place the server on its side with the cover up.

Procedure

Step 1. Make preparation for this task.

a. Remove the server cover. See "Remove the server cover" on page 154.

Attention: The heat sinks and processor could be very hot. To avoid burning yourself, wait for a few minutes after turning off the server before you remove the server cover.

b. **(Removing the front fan only)** Remove the front bezel. See "Remove the front bezel" on page 97.

Step 2. Disconnect the fan cable from the system board. See Chapter 6 "Internal cable routing" on page 161.

Attention: To avoid damaging the system board, make sure to follow the instructions in Chapter 6 "Internal cable routing" on page 161 when disconnecting cables from the system board.

Step 3. If you are removing the rear fan for replacing or recycling the system board, perform the following steps.

a. ❶ Carefully squeeze the four rubber mounts with a pair of pliers and push the rubber mounts inward instead of cutting off them.

b. ❷ Slide the fan away from the chassis; then, lift it out of the chassis.

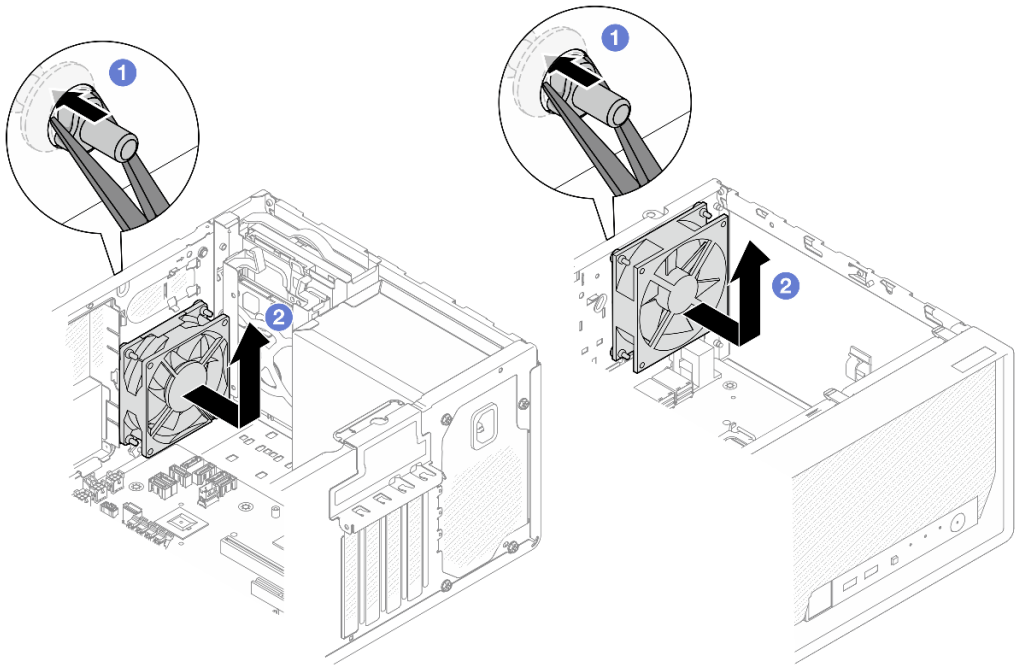

Figure 63. Removing the fan by squeezing rubber mounts

Step 4. If you are replacing the front or rear fan, perform the following steps.

a. ❶ From the outside of the chassis, cut off the four rubber mounts that secure the fan to the chassis.

b. ❷ Slide the fan away from the chassis; then, lift it out of the chassis.

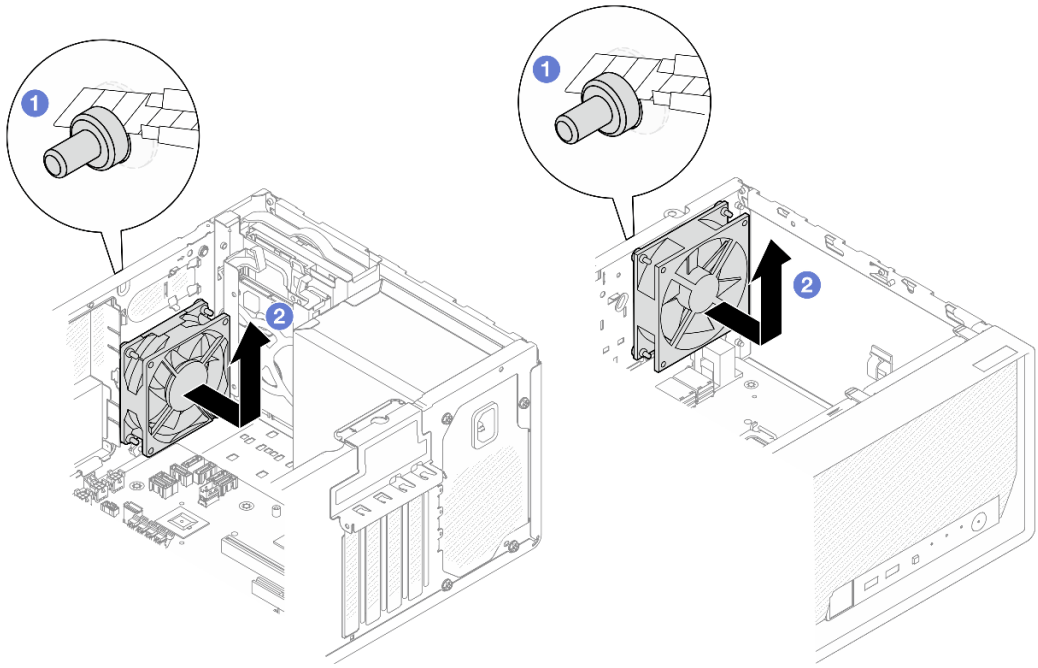

Figure 64. Removing the fan by cutting off rubber mounts

After you finish

1. Install a replacement unit. See “Install the fan (front and rear)” on page 95.
2. If you are instructed to return the component or optional device, follow all packaging instructions, and use any packaging materials for shipping that are supplied to you.

Demo video

Watch the procedure on YouTube

Install the fan (front and rear)

Follow instructions in this section to install the front fan or rear fan.

About this task

S002

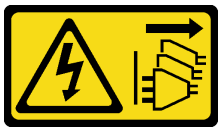

CAUTION:
The power-control button on the device and the power switch on the power supply do not turn off the electrical current supplied to the device. The device also might have more than one power cord. To remove all electrical current from the device, ensure that all power cords are disconnected from the power source.

Attention:

- Read “Installation Guidelines” on page 37 and “Safety inspection checklist” on page 38 to ensure that you work safely.
- Touch the static-protective package that contains the component to any unpainted metal surface on the server; then, remove it from the package and place it on a static-protective surface.

Procedure

Step 1. Install the front fan or rear fan.

a. ❶ Align the four rubber mounts on the fan with the corresponding holes on the chassis.

b. ❷ With a pair of pliers, gently pull the tips of the four rubber mounts through the holes until the fan is secured to the chassis.

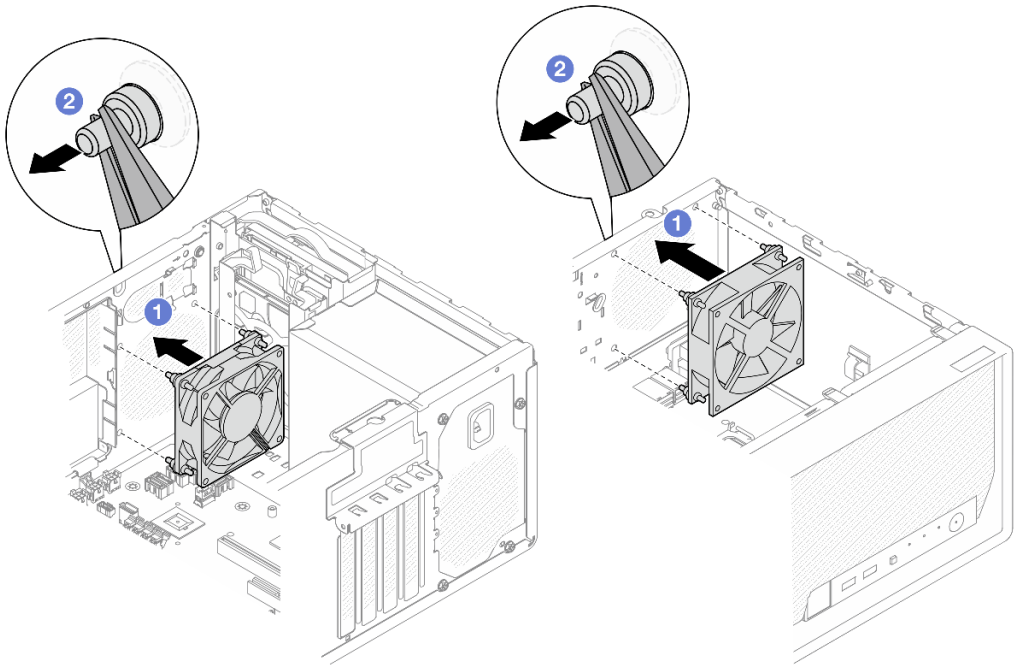

Figure 65. Installing the front fan or the rear fan

Note: Make sure the rubber mounts are fully pulled out of the holes to secure the fans steadily to the chassis.

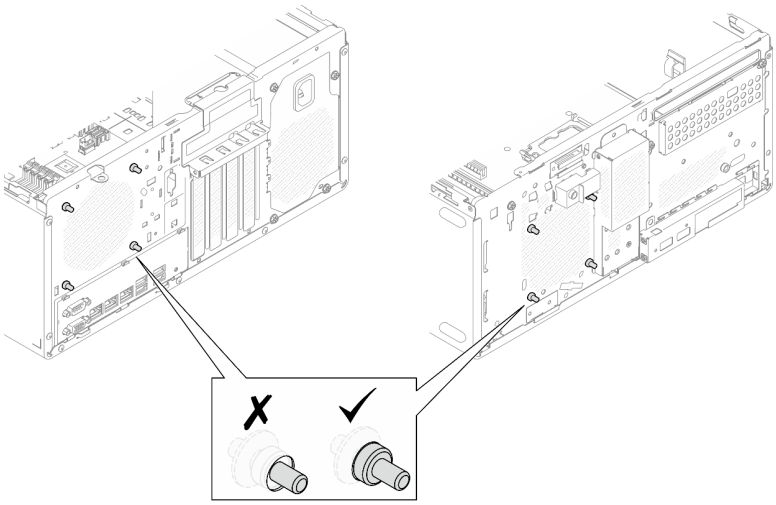

Figure 66. Front fan and rear fan rubber mounts installation

Step 2. Connect the fan cable to the system board. See Chapter 6 “Internal cable routing” on page 161.

After you finish

1. **(Removing the front fan only)** Install the front bezel. See “Install the front bezel” on page 98.
2. Install the server cover. See “Install the server cover” on page 157.
3. Complete the parts replacement. See “Complete the parts replacement” on page 159.

Demo video

Watch the procedure on YouTube

Front bezel replacement

Follow instructions in this section to remove and install the front bezel.

Remove the front bezel

Follow instructions in this section to remove the front bezel.

About this task

S002

CAUTION:
The power-control button on the device and the power switch on the power supply do not turn off the electrical current supplied to the device. The device also might have more than one power cord. To remove all electrical current from the device, ensure that all power cords are disconnected from the power source.

Attention:

- Read "Installation Guidelines" on page 37 and "Safety inspection checklist" on page 38 to ensure that you work safely.
- Power off the server and peripheral devices and disconnect the power cords and all external cables. See "Power off the server" on page 43.
- If the server is in a rack, remove it from the rack. See "Remove the server from rack" on page 43.
- Remove any locking device that secures the server, such as a Kensington lock or a padlock.
- Place the server on its side with the cover up.

Procedure

Step 1. Make preparation for this task.

a. Remove the server cover. See "Remove the server cover" on page 154.

Attention: The heat sinks and processor could be very hot. To avoid burning yourself, wait for a few minutes after turning off the server before you remove the server cover.

Step 2. Remove the front bezel.

a. ❶ Release the three plastic tabs on the front bezel.

b. ❷ Rotate the front bezel to remove it from the chassis.

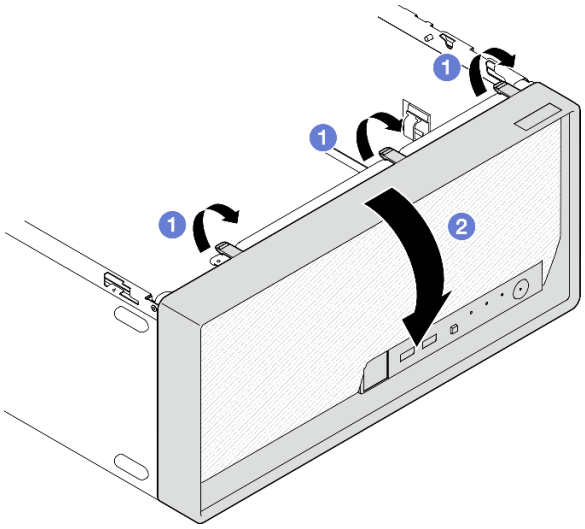

Figure 67. Removing the front bezel

After you finish

1. Install a replacement unit. See "Install the front bezel" on page 98.
2. If you are instructed to return the component or optional device, follow all packaging instructions, and use any packaging materials for shipping that are supplied to you.

Demo video

Watch the procedure on YouTube

Install the front bezel

Follow instructions in this section to install the front bezel.

About this task

S002

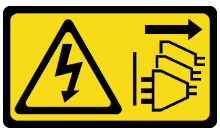

CAUTION:
The power-control button on the device and the power switch on the power supply do not turn off the electrical current supplied to the device. The device also might have more than one power cord. To remove all electrical current from the device, ensure that all power cords are disconnected from the power source.

Attention:

- Read "Installation Guidelines" on page 37 and "Safety inspection checklist" on page 38 to ensure that you work safely.

Procedure

Step 1. Install the front bezel.

a. ❶ Insert the three plastic tabs on the bottom of the front bezel with the corresponding slots on the front of the chassis.

b. ❷ Pivot the front bezel towards to chassis until it snaps into place.

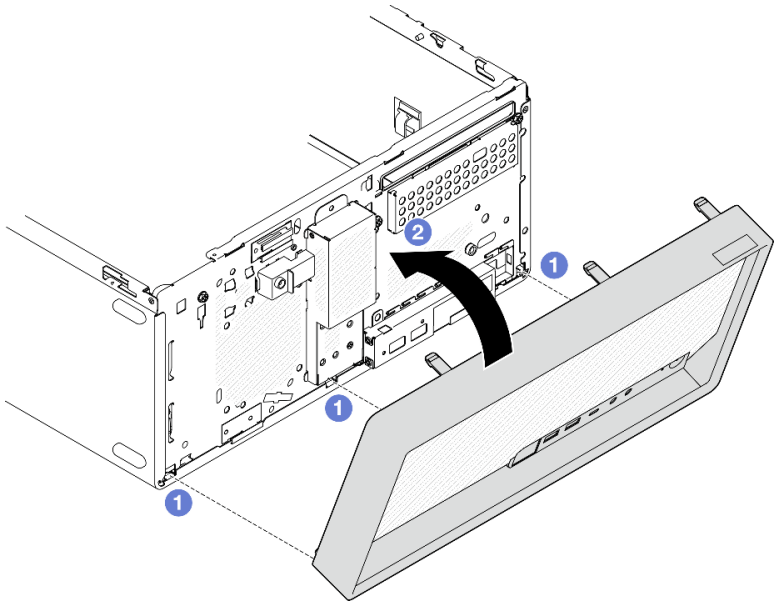

Figure 68. Installing the front bezel

After you finish

1. Install the server cover. See "Install the server cover" on page 157.
2. Complete the parts replacement. See "Complete the parts replacement" on page 159.

Demo video

Watch the procedure on YouTube

Heat sink and fan module replacement (trained technician only)

Follow instructions in this section to remove and install the heat sink and fan module.

Important: This task must be operated by trained technicians that are certified by Lenovo Service. Do not attempt to remove or install the part without proper training and qualification.

Remove the heat sink and fan module (trained technician only)

Follow instructions in this section to remove the heat sink and fan module. The procedure must be executed by a trained technician.

About this task

S002

CAUTION:
The power-control button on the device and the power switch on the power supply do not turn off the electrical current supplied to the device. The device also might have more than one power cord. To remove all electrical current from the device, ensure that all power cords are disconnected from the power source.

Attention:

- Read "Installation Guidelines" on page 37 and "Safety inspection checklist" on page 38 to ensure that you work safely.
- Power off the server and peripheral devices and disconnect the power cords and all external cables. See "Power off the server" on page 43.
- If the server is in a rack, remove it from the rack. See "Remove the server from rack" on page 43.
- Remove any locking device that secures the server, such as a Kensington lock or a padlock.
- Place the server on its side with the cover up.

Procedure

Step 1. Make preparation for this task.

a. Remove the server cover. See "Remove the server cover" on page 154.

Attention: The heat sinks and processor could be very hot. To avoid burning yourself, wait for a few minutes after turning off the server before you remove the server cover.

b. If applicable, remove the optical drive. See "Remove an optical drive" on page 83.

c. If applicable, remove the optical drive cage. See "Remove an optical drive cage" on page 89.

Step 2. Disconnect the heat sink and fan module cables from the system board. See Chapter 6 "Internal cable routing" on page 161.

Attention: To avoid damaging the system board, make sure to follow the instructions in Chapter 6 "Internal cable routing" on page 161 when disconnecting cables from the system board.

Step 3. If the server is installed with processor with 95W TDP, the heat sink fan is installed on the rear side of the chassis. Remove the four securing screws from outside of the chassis.

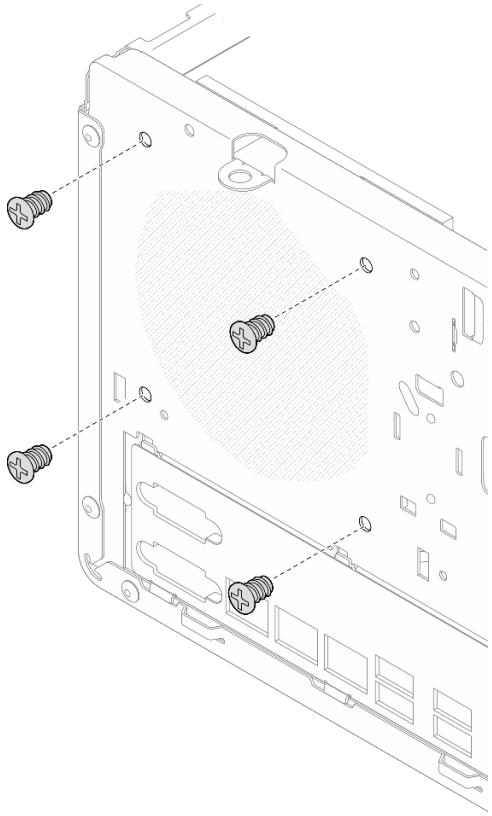

Figure 69. Removing the four screws securing the heat sink fan to the chassis

Step 4. Remove the heat sink and fan module.

a. ❶ & ❷ Loosen screw 1 and 2: First, partially loosen screw 1; then, fully loosen screw 2. Finally, fully loosen screw 1.

b. ❸ & ❹ Loosen screw 3 and 4: First, partially loosen screw 3; then, fully loosen screw 4. Finally, fully loosen screw 3.

c. ❺ Lift evenly and remove the heat sink and fan module from the server.

Notes:

1. Gently remove the four screws to avoid any possible damage to the system board.
2. Always keep the four screws attached to the heat sink and fan module.
3. Do not touch the thermal grease while handling the heat sink and fan module.

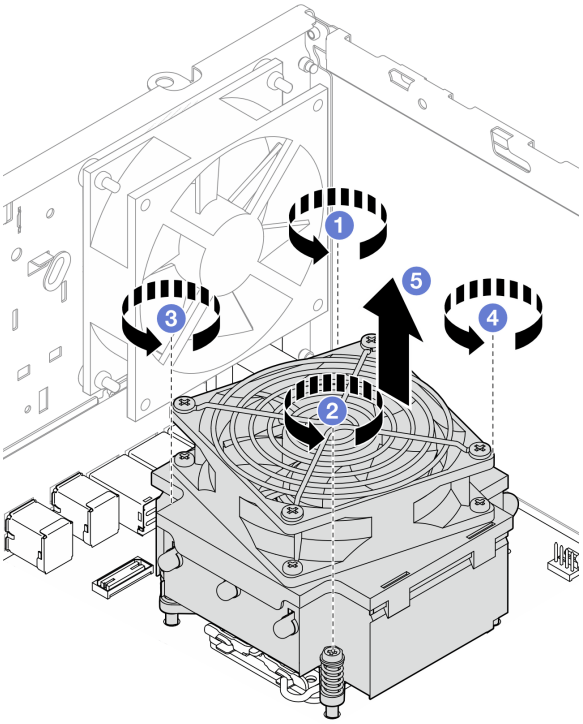

Figure 70. Loosening the screws on the heat sink and fan module for processor with TDP lower than 95W

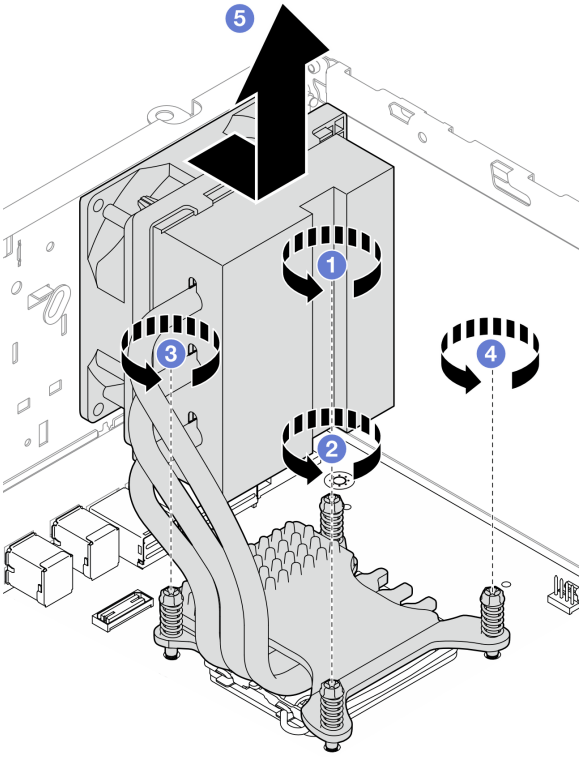

Figure 71. Loosening the screws on the heat sink and fan module for processor with 95W TDP

After you finish

1. Install a replacement unit. See "Install the heat sink and fan module (trained technician only)" on page 103.
2. If you are instructed to return the component or optional device, follow all packaging instructions, and use any packaging materials for shipping that are supplied to you.

Demo video

Watch the procedure on YouTube

Install the heat sink and fan module (trained technician only)

Follow instructions in this section to install the heat sink and fan module. The procedure must be executed by a trained technician.

About this task

S002

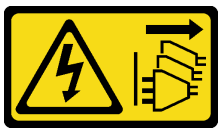

CAUTION:
The power-control button on the device and the power switch on the power supply do not turn off the electrical current supplied to the device. The device also might have more than one power cord. To remove all electrical current from the device, ensure that all power cords are disconnected from the power source.

Attention:

- Read "Installation Guidelines" on page 37 and "Safety inspection checklist" on page 38 to ensure that you work safely.
- Touch the static-protective package that contains the component to any unpainted metal surface on the server; then, remove it from the package and place it on a static-protective surface.

Procedure

Step 1. Install the processor if one is not yet installed. See "Install the processor (trained technician only)" on page 136.

Step 2. Align the four screws on the heat sink and fan assembly with the corresponding screw holes in the chassis. Make sure the fan cable is close to the heat sink fan connector. See "System-board connectors" on page 23.

Step 3. Install the heat sink and fan module.

a. ❶ & ❷ Tighten screw 1 and 2: First, partially tighten screw 1; then, fully tighten screw 2. Finally, fully tighten screw 1.

b. ❸ & ❹ Tighten screw 3 and 4: First, partially tighten screw 3; then, fully tighten screw 4. Finally, fully tighten screw 3.

Note: Do not touch the thermal grease while handling the heat sink and fan module.

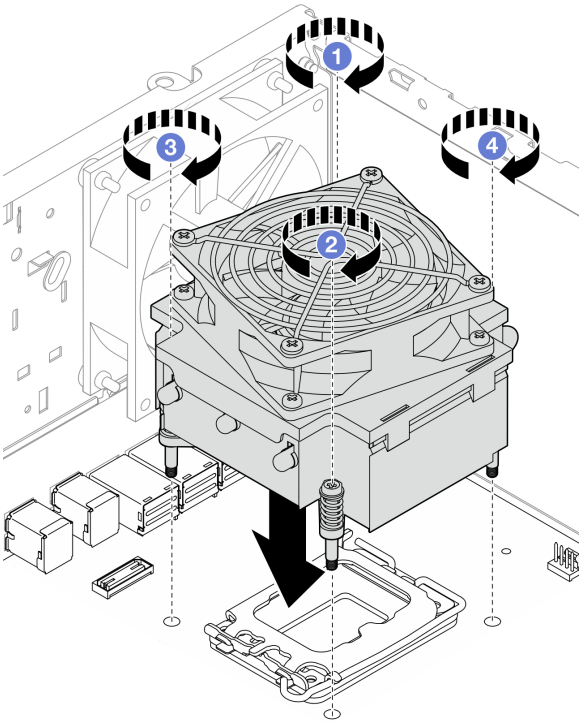

Figure 72. Tightening the screws on the heat sink and fan module for processor with TDP lower than 95W

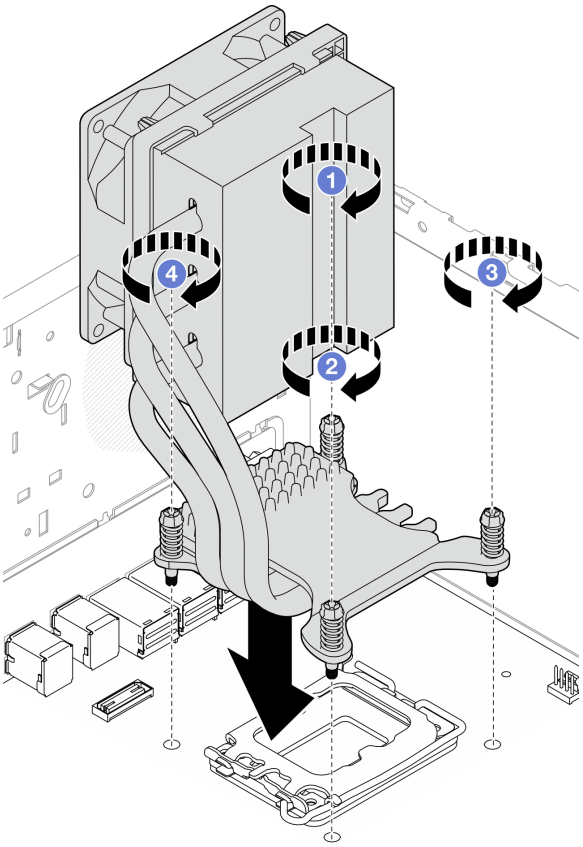

Figure 73. Tightening the screws on the heat sink and fan module for processor with 95W TDP

Step 4. If the server is installed with processor with 95W TDP, the heat sink fan should be installed on the rear side of the chassis. Align the four fan screws to the screw holes on the rear side of the chassis, and fasten the screws to secure it.

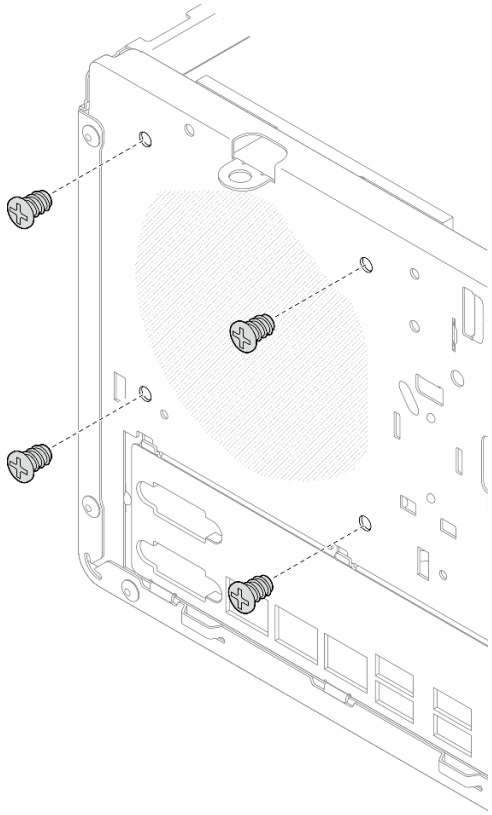

Figure 74. Installing the heat sink fan to the rear of the chassis

Step 5. Connect the heat sink fan cable to the system board. See Chapter 6 “Internal cable routing” on page 161.

After you finish

1. If applicable, install the optical drive cage. See “Install the optical drive cage” on page 90.
2. If applicable, install the optical drive. See “Install an optical drive” on page 86.
3. Install the server cover. See “Install the server cover” on page 157.
4. Complete the parts replacement. See “Complete the parts replacement” on page 159.

Demo video

Watch the procedure on YouTube

Intrusion switch replacement

Follow instructions in this section to remove and install the intrusion switch. The intrusion switch generates an event in the system event log (SEL) when the server cover is not properly installed.

Remove the intrusion switch

Follow instructions in this section to remove the intrusion switch.

About this task

S002

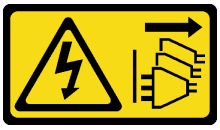

CAUTION:
The power-control button on the device and the power switch on the power supply do not turn off the electrical current supplied to the device. The device also might have more than one power cord. To remove all electrical current from the device, ensure that all power cords are disconnected from the power source.

Attention:

- Read "Installation Guidelines" on page 37 and "Safety inspection checklist" on page 38 to ensure that you work safely.
- Power off the server and peripheral devices and disconnect the power cords and all external cables. See "Power off the server" on page 43.
- If the server is in a rack, remove it from the rack. See "Remove the server from rack" on page 43.
- Remove any locking device that secures the server, such as a Kensington lock or a padlock.
- Place the server on its side with the cover up.

Procedure

Step 1. Make preparation for this task.

a. Remove the server cover. See "Remove the server cover" on page 154.

Attention: The heat sinks and processor could be very hot. To avoid burning yourself, wait for a few minutes after turning off the server before you remove the server cover.

b. If applicable, remove the optical drive. See "Remove an optical drive" on page 83.

c. If applicable, remove the optical drive cage. See "Remove an optical drive cage" on page 89.

Step 2. Disconnect the intrusion switch cable from the system board. See Chapter 6 "Internal cable routing" on page 161.

Attention: To avoid damaging the system board, make sure to follow the instructions in Chapter 6 "Internal cable routing" on page 161 when disconnecting cables from the system board.

Step 3. Remove the intrusion switch.

a. ❶ Remove the screw that secures the intrusion switch to the chassis.

b. ❷ Remove the intrusion switch from the chassis.

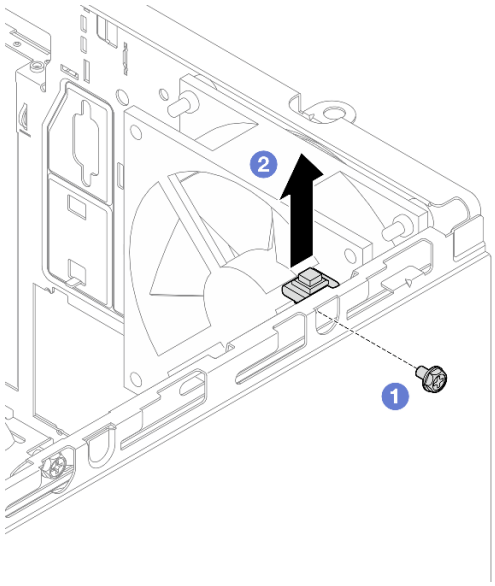

Figure 75. Removing the intrusion switch

After you finish

1. Install a replacement unit. See "Install the intrusion switch" on page 107.
2. If you are instructed to return the component or optional device, follow all packaging instructions, and use any packaging materials for shipping that are supplied to you.

Demo video

Watch the procedure on YouTube

Install the intrusion switch

Follow instructions in this section to install the intrusion switch.

About this task

S002

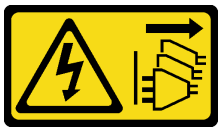

CAUTION:
The power-control button on the device and the power switch on the power supply do not turn off the electrical current supplied to the device. The device also might have more than one power cord. To remove all electrical current from the device, ensure that all power cords are disconnected from the power source.

Attention:

- Read "Installation Guidelines" on page 37 and "Safety inspection checklist" on page 38 to ensure that you work safely.

- Touch the static-protective package that contains the component to any unpainted metal surface on the server; then, remove it from the package and place it on a static-protective surface.

Procedure

Step 1. If you are installing an intrusion switch option, assemble the intrusion switch. Insert the intrusion switch into the bracket until it clicks into place.

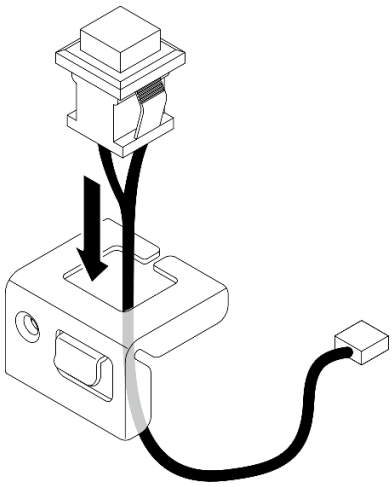

Figure 76. Assembling the intrusion switch

Step 2. Install the intrusion switch.

a. ❶ Align the intrusion switch to the slot on the chassis.

b. ❷ Fasten the screw to secure the intrusion switch to the chassis.

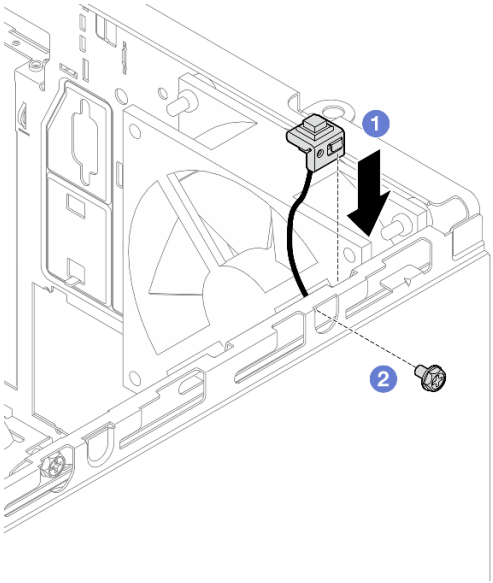

Figure 77. Installing the intrusion switch

Step 3. Connect the intrusion switch cable to the system board. See Chapter 6 “Internal cable routing” on page 161.

After you finish

1. If applicable, install the optical drive cage. See "Install the optical drive cage" on page 90.
2. If applicable, install the optical drive. See "Install an optical drive" on page 86.
3. Install the server cover. See "Install the server cover" on page 157. Then, connect the power cord to the power supply.
4. If it is the first time to install an intrusion switch on the server, check whether the following messages exist in the Event Log list of Lenovo XClarity Controller:
   - The Chassis ThinkSystem ST50 V3 was opened.
   - The Chassis ThinkSystem ST50 V3 was closed.

   If yes, it indicates that the intrusion switch is installed properly.

   Note: These two messages will be generated again every time when the server cover is opened and installed back.

Demo video

Watch the procedure on YouTube

M.2 boot adapter replacement

Follow instructions in this section to remove and install the M.2 boot adapter.

Remove the M.2 boot adapter

Follow instructions in this section to remove the M.2 boot adapter.

About this task

- **S002**

CAUTION:
The power-control button on the device and the power switch on the power supply do not turn off the electrical current supplied to the device. The device also might have more than one power cord. To remove all electrical current from the device, ensure that all power cords are disconnected from the power source.

Attention:

- Read "Installation Guidelines" on page 37 and "Safety inspection checklist" on page 38 to ensure that you work safely.
- Power off the server and peripheral devices and disconnect the power cords and all external cables. See "Power off the server" on page 43.
- If the server is in a rack, remove it from the rack. See "Remove the server from rack" on page 43.
- Remove any locking device that secures the server, such as a Kensington lock or a padlock.

Procedure

Step 1. Make preparation for this task.

a. Remove the server cover. See “Remove the server cover” on page 154.

Attention: The heat sinks and processor could be very hot. To avoid burning yourself, wait for a few minutes after turning off the server before you remove the server cover.

b. Disconnect the M.2 boot adapter cables from the system board.

Attention: To avoid damaging the system board, make sure to follow the instructions in Chapter 6 “Internal cable routing” on page 161 when disconnecting cables from the system board.

c. Remove the PCIe adapter that secures the M.2 boot adapter. See “Remove a PCIe adapter” on page 124.

d. Remove the M.2 drives from the M.2 boot adapter. See “Remove an M.2 drive” on page 114.

Step 2. Disconnect the power and signal cables from the M.2 boot adapter.

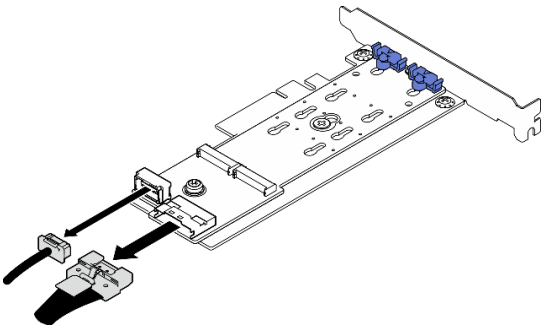

Figure 78. Disconnecting the power and signal cables

Step 3. Remove the M.2 boot adapter.

a. ❶ Remove the screw that secures the M.2 boot adapter to the PCIe adapter.

b. ❷ Loosen the captive screw on the M.2 boot adapter.

c. ❸ Slightly slide the M.2 boot adapter as illustrated and carefully separate it from the PCIe adapter.

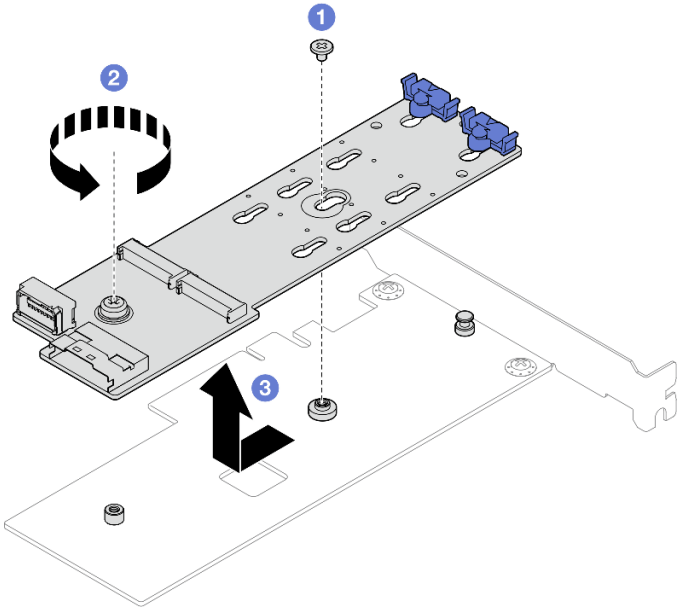

Figure 79. Removing the M.2 boot adapter

After you finish

1. Install another M.2 boot adapter if necessary. See "Install the M.2 boot adapter" on page 111. Otherwise, install a bracket to cover the vacancy on the chassis, and close the retainer.
2. If you are instructed to return the component or optional device, follow all packaging instructions, and use any packaging materials for shipping that are supplied to you.

Demo video

Watch the procedure on YouTube

Install the M.2 boot adapter

Follow instructions in this section to install the M.2 boot adapter.

About this task

To avoid potential danger, read and follow the following safety statements.

- **S002**

CAUTION:
The power-control button on the device and the power switch on the power supply do not turn off the electrical current supplied to the device. The device also might have more than one power cord. To remove all electrical current from the device, ensure that all power cords are disconnected from the power source.

Attention:

- Read “Installation Guidelines” on page 37 and “Safety inspection checklist” on page 38 to ensure that you work safely.
- Touch the static-protective package that contains the component to any unpainted metal surface on the server; then, remove it from the package and place it on a static-protective surface.

Firmware and driver download: You might need to update the firmware or driver after replacing a component.

- Go to https://datacentersupport.lenovo.com/tw/en/products/servers/thinksystem/st50v3/7df3/downloads/driver-list/ to see the latest firmware and driver updates for your server.
- Go to “Update the firmware” on page 178 for more information on firmware updating tools.

Procedure

Step 1. If a bracket is installed in the chassis, open the PCIe adapter retainer bracket and remove the bracket from the chassis. Keep the bracket for future use.

Step 2. Remove the screw on the back of the PCIe adapter.

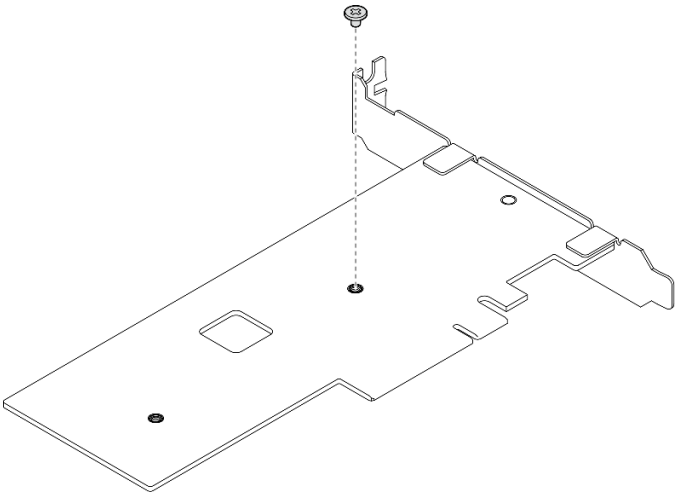

Figure 80. Removing the screw on the back of the PCIe adapter

Step 3. Secure the M.2 boot adapter to the PCIe adapter.

a. ❶ Align the M.2 boot adapter with the T-head pin on the PCIe adapter as illustrated, and slide it into place.

b. ❷ Tighten the captive screw on the M.2 boot adapter.

c. ❸ Tighten the screw from Step 1 to secure the M.2 boot adapter to the PCIe adapter.

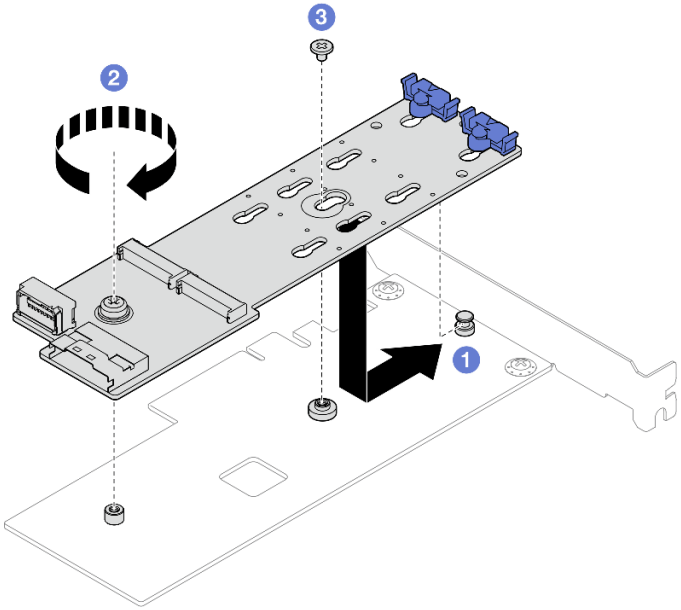

Figure 81. Securing the M.2 boot adapter to the PCIe adapter

Step 4. Connect the power and signal cables to the M.2 boot adapter.

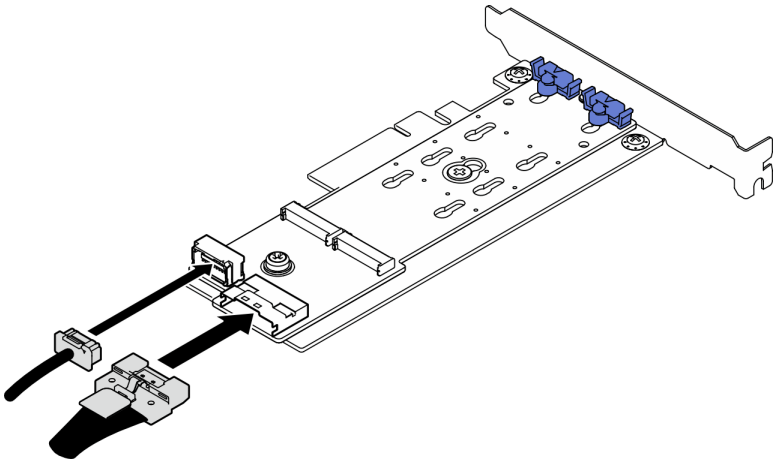

Figure 82. Installing the M.2 power and signal cables

After you finish

1. Install the M.2 drives to the M.2 boot adapter. See "Install an M.2 drive" on page 116.
2. Install the PCIe adapter that secures the M.2 boot adapter. See "Install a PCIe adapter" on page 126.

   Note: The M.2 boot adapter can only be installed in **PCIe slot 3**.
3. Connect the power cable and the signal cable to the system board. See Chapter 6 "Internal cable routing" on page 161.
4. Install the server cover. See "Install the server cover" on page 157.
5. Complete the parts replacement. See "Complete the parts replacement" on page 159.

Demo video

Watch the procedure on YouTube

M.2 drive replacement

Follow instructions in this section to remove and install the M.2 drive.

Remove an M.2 drive

Follow instructions in this section to remove an M.2 drive.

About this task

- **S002**

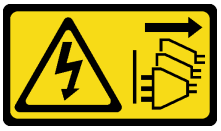

CAUTION:
The power-control button on the device and the power switch on the power supply do not turn off the electrical current supplied to the device. The device also might have more than one power cord. To remove all electrical current from the device, ensure that all power cords are disconnected from the power source.

Attention:

- Read "Installation Guidelines" on page 37 and "Safety inspection checklist" on page 38 to ensure that you work safely.
- Power off the server and peripheral devices and disconnect the power cords and all external cables. See "Power off the server" on page 43.
- If the server is in a rack, remove it from the rack. See "Remove the server from rack" on page 43.
- Remove any locking device that secures the server, such as a Kensington lock or a padlock.

Procedure

Step 1. Make preparation for this task.

a. Remove the server cover. See "Remove the server cover" on page 154.

Attention: The heat sinks and processor could be very hot. To avoid burning yourself, wait for a few minutes after turning off the server before you remove the server cover.

b. Disconnect the M.2 boot adapter cables from the system board.

Attention: To avoid damaging the system board, make sure to follow the instructions in Chapter 6 "Internal cable routing" on page 161 when disconnecting cables from the system board.

c. Remove the PCIe adapter that secures the M.2 boot adapter. See "Remove a PCIe adapter" on page 124.

Step 2. Remove the M.2 drive.

a. ❶ Press both sides of the retainers.

b. ❷ Slide the retainer backwards to loosen the M.2 drive from the M.2 boot adapter.

c. ❸ Pivot the M.2 drive away from the M.2 boot adapter.

d. ❹ Pull the M.2 drive away from the connector at an angle.

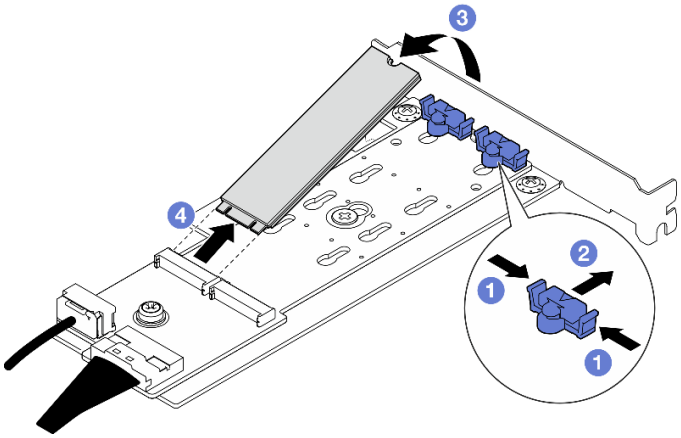

Figure 83. Removing an M.2 drive

After you finish

1. Install a replacement unit. See "Install an M.2 drive" on page 116.
2. If you are instructed to return the component or optional device, follow all packaging instructions, and use any packaging materials for shipping that are supplied to you.

Demo video

Watch the procedure on YouTube

Adjust the retainer on the M.2 boot adapter

Follow instructions in this section to adjust the retainer on the M.2 boot adapter.

About this task

- **S002**

CAUTION:
The power-control button on the device and the power switch on the power supply do not turn off the electrical current supplied to the device. The device also might have more than one power cord. To remove all electrical current from the device, ensure that all power cords are disconnected from the power source.

Attention:

- Read "Installation Guidelines" on page 37 and "Safety inspection checklist" on page 38 to ensure that you work safely.
- Power off the server and peripheral devices and disconnect the power cords and all external cables. See "Power off the server" on page 43.
- If the server is in a rack, remove it from the rack. See "Remove the server from rack" on page 43.
- Remove any locking device that secures the server, such as a Kensington lock or a padlock.

Procedure

Step 1. Before adjusting the retainer on the M.2 boot adapter, locate the correct keyhole that the retainer should be installed into to accommodate the particular size of the M.2 drive to be installed.

Note: The M.2 boot adapter might be different from the following illustrations, but the adjustment method is the same.

Step 2. Adjust the retainer on the M.2 boot adapter.

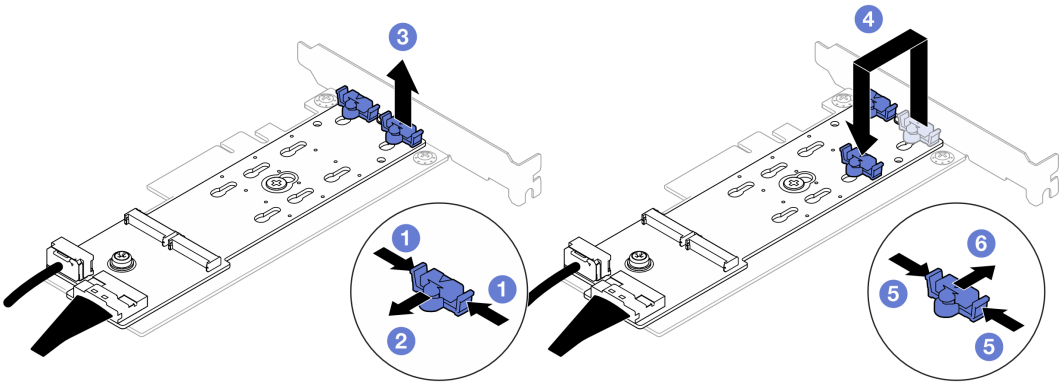

Figure 84. Adjusting the M.2 retainer

a. ❶ Press both sides of the retainers.

b. ❷ Move the retainer forward until it is in the large opening of the keyhole.

c. ❸ Take the retainer out of the keyhole.

d. ❹ Insert the retainer into the correct keyhole to accommodate the particular size of the M.2 drive to be installed.

e. ❺ Press both sides of the retainer.

f. ❻ Slide the retainer backwards until it is seated in place.

Install an M.2 drive

Follow instructions in this section to install an M.2 drive.

About this task

- **S002**

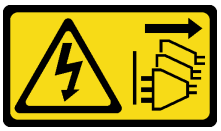

CAUTION:
The power-control button on the device and the power switch on the power supply do not turn off the electrical current supplied to the device. The device also might have more than one power cord. To remove all electrical current from the device, ensure that all power cords are disconnected from the power source.

Attention:

- Read "Installation Guidelines" on page 37 and "Safety inspection checklist" on page 38 to ensure that you work safely.

- Touch the static-protective package that contains the component to any unpainted metal surface on the server; then, remove it from the package and place it on a static-protective surface.

Procedure

Step 1. Locate the M.2 drive slot on the M.2 boot adapter.

Note: As ThinkSystem ST50 V3 supports two M.2 drives, install your M.2 drive in **slot 0** first.

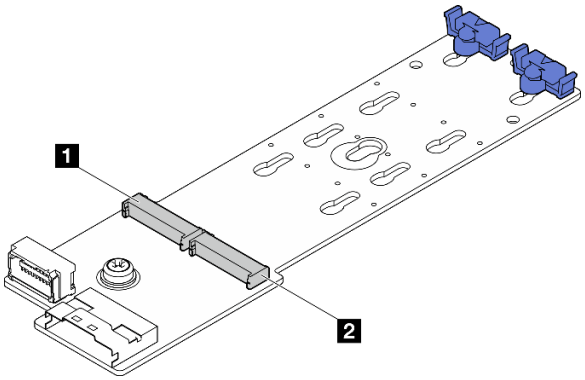

Figure 85. M.2 drive slots

Table 7. M.2 drive slot locations on M.2 boot adapter

1 M.2 drive slot 0	2 M.2 drive slot 1

Step 2. Install an M.2 drive.

a. ❶ Insert the M.2 drive at an angle into the connector.

b. ❷ Pivot the M.2 drive down until the notch catches on the lip of the retainer.

c. ❸ Slide the retainer forward (towards the connector) to secure the M.2 drive into place.

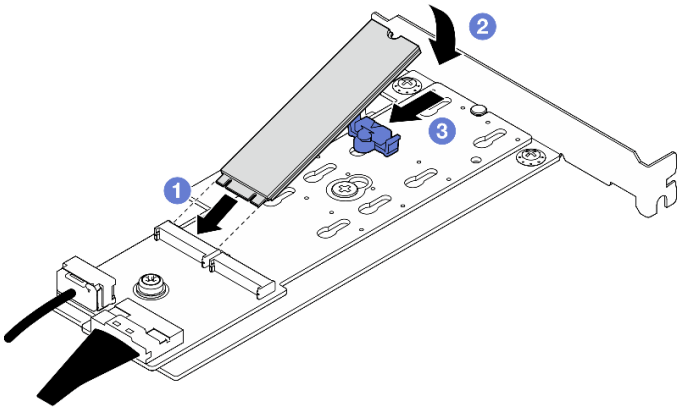

Figure 86. Installing an M.2 drive

After you finish

1. Install the PCIe adapter that secures the M.2 boot adapter. See "Install a PCIe adapter" on page 126.
2. Connect the M.2 boot adapter cables to the system board. See Chapter 6 "Internal cable routing" on page 161.
3. Install the server cover. See "Install the server cover" on page 157.

4. Complete the parts replacement. See “Complete the parts replacement” on page 159.

Demo video

Watch the procedure on YouTube

Memory module replacement

Follow instructions in this section to remove and install a memory module.

Remove a memory module

Follow instructions in this section to remove a memory module.

About this task

S002

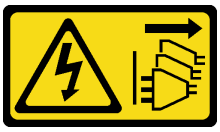

CAUTION:
The power-control button on the device and the power switch on the power supply do not turn off the electrical current supplied to the device. The device also might have more than one power cord. To remove all electrical current from the device, ensure that all power cords are disconnected from the power source.

Attention:

- Read “Installation Guidelines” on page 37 and “Safety inspection checklist” on page 38 to ensure that you work safely.
- Power off the server and peripheral devices and disconnect the power cords and all external cables. See “Power off the server” on page 43.
- If the server is in a rack, remove it from the rack. See “Remove the server from rack” on page 43.
- Remove any locking device that secures the server, such as a Kensington lock or a padlock.
- Place the server on its side with the cover up.
- Make sure to remove or install memory module 20 seconds after disconnecting power cords from the system. It allows the system to be completely discharged of electricity and safe for handling memory module.
- If you are not installing a replacement memory module to the same slot, make sure you have memory module filler available.
- Memory modules are sensitive to static discharge and require special handling. Refer to the standard guidelines for “Handling static-sensitive devices” on page 40.
  - Always wear an electrostatic-discharge strap when removing or installing memory modules. Electrostatic-discharge gloves can also be used.
  - Never hold two or more memory modules together so that they do not touch each other. Do not stack memory modules directly on top of each other during storage.
  - Never touch the gold memory module connector contacts or allow these contacts to touch the outside of the memory module connector housing.

- Handle memory modules with care: never bend, twist, or drop a memory module.
- Do not use any metal tools (such as jigs or clamps) to handle the memory modules, because the rigid metals may damage the memory modules.
- Do not insert memory modules while holding packages or passive components, which can cause package cracks or detachment of passive components by the high insertion force.

Procedure

Step 1. Make preparation for this task.

a. Remove the server cover. See "Remove the server cover" on page 154.

Attention: The heat sinks and processor could be very hot. To avoid burning yourself, wait for a few minutes after turning off the server before you remove the server cover.

b. If applicable, remove the optical drive. See "Remove an optical drive" on page 83.

c. If applicable, remove the optical drive cage. See "Remove an optical drive cage" on page 89.

d. Locate the memory module slots and determine the memory module to be removed.

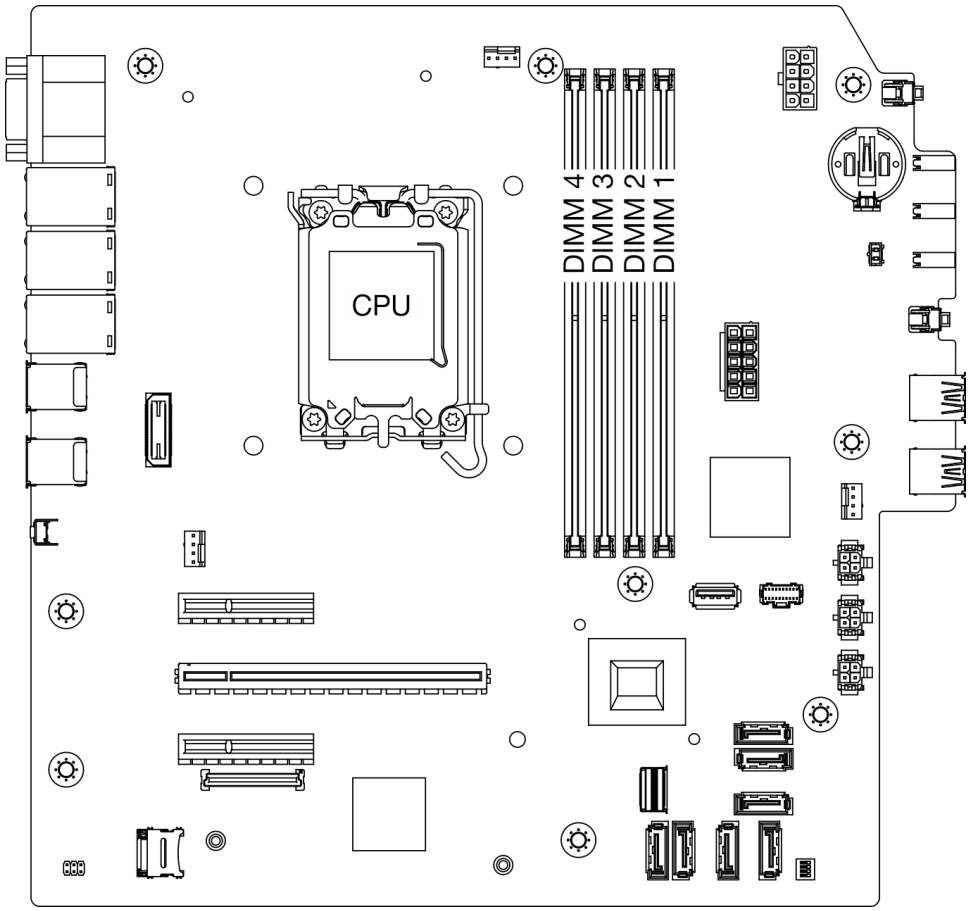

Figure 87. Memory modules and processors layout

Step 2. Open the retaining clips on each end of the memory module slot. If necessary, you can use a pointed tool to open the retaining clips due to space constraints. Pencils are not recommended as a tool as they may not be strong enough.

a. ❶ Place the tip of the tool in the recess on the top of the retaining clip.

b. ❷ Carefully rotate the retaining clip away from the memory module slot.

Attention: To avoid breaking the retaining clips or damaging the memory module slots, handle the clips gently.

Figure 88. Opening retaining clips

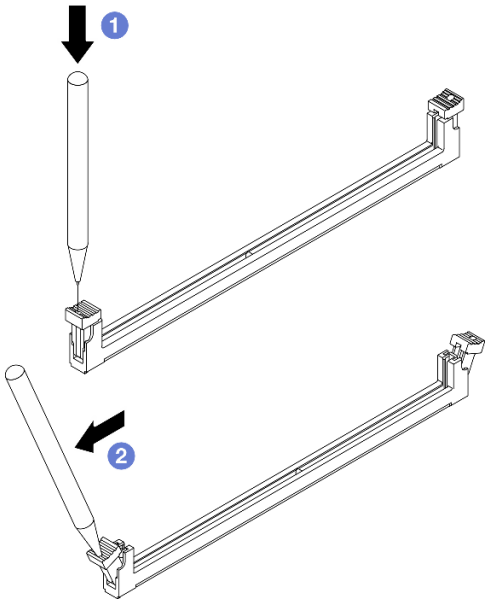

Step 3. Remove the memory module from the slot.

a. ❶ Make sure the retaining clips are in the fully open position.

b. ❷ Hold the memory module at both ends and carefully lift it out of the slot.

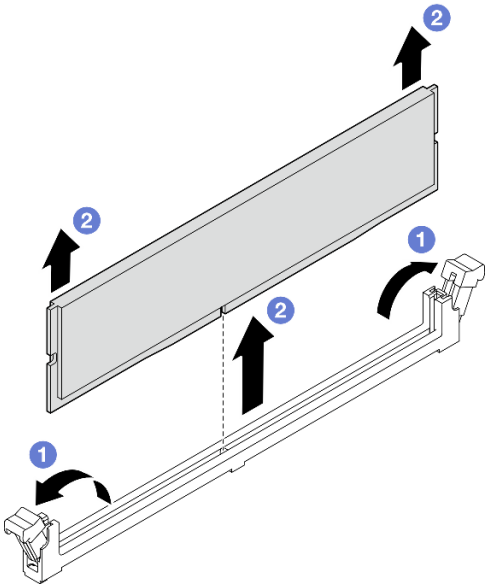

Figure 89. Memory module removal

After you finish

1. Install a replacement unit. See "Install a memory module" on page 121.

2. If you are instructed to return the component or optional device, follow all packaging instructions, and use any packaging materials for shipping that are supplied to you.

Demo video

Watch the procedure on YouTube

Install a memory module

Follow instructions in this section to install a memory module.

About this task

S002

CAUTION:
The power-control button on the device and the power switch on the power supply do not turn off the electrical current supplied to the device. The device also might have more than one power cord. To remove all electrical current from the device, ensure that all power cords are disconnected from the power source.

See "Memory module installation rules and order" on page 41 for detailed information about memory configuration and setup.

Attention:

- Read "Installation Guidelines" on page 37 and "Safety inspection checklist" on page 38 to ensure that you work safely.
- Make sure to remove or install memory module 20 seconds after disconnecting power cords from the system. It allows the system to be completely discharged of electricity and safe for handling memory module.
- Make sure to adopt one of the supported configurations listed in "Memory module installation rules and order" on page 41.
- Memory modules are sensitive to static discharge and require special handling. Refer to the standard guidelines at "Handling static-sensitive devices" on page 40:
  - Always wear an electrostatic-discharge strap when removing or installing memory modules. Electrostatic-discharge gloves can also be used.
  - Never hold two or more memory modules together so that they do not touch each other. Do not stack memory modules directly on top of each other during storage.
  - Never touch the gold memory module connector contacts or allow these contacts to touch the outside of the memory module connector housing.
  - Handle memory modules with care: never bend, twist, or drop a memory module.
  - Do not use any metal tools (such as jigs or clamps) to handle the memory modules, because the rigid metals may damage the memory modules.
  - Do not insert memory modules while holding packages or passive components, which can cause package cracks or detachment of passive components by the high insertion force.

Firmware and driver download: You might need to update the firmware or driver after replacing a component.

- Go to https://datacentersupport.lenovo.com/tw/en/products/servers/thinksystem/st50v3/7df3/downloads/driver-list/ to see the latest firmware and driver updates for your server.
- Go to "Update the firmware" on page 178 for more information on firmware updating tools.

Procedure

Attention: Make sure to remove or install memory module 20 seconds after disconnecting power cords from the system. It allows the system to be completely discharged of electricity and safe for handling memory module.

Step 1. Locate the memory module slots and determine memory module installation order based on "Memory module installation rules and order" on page 41.

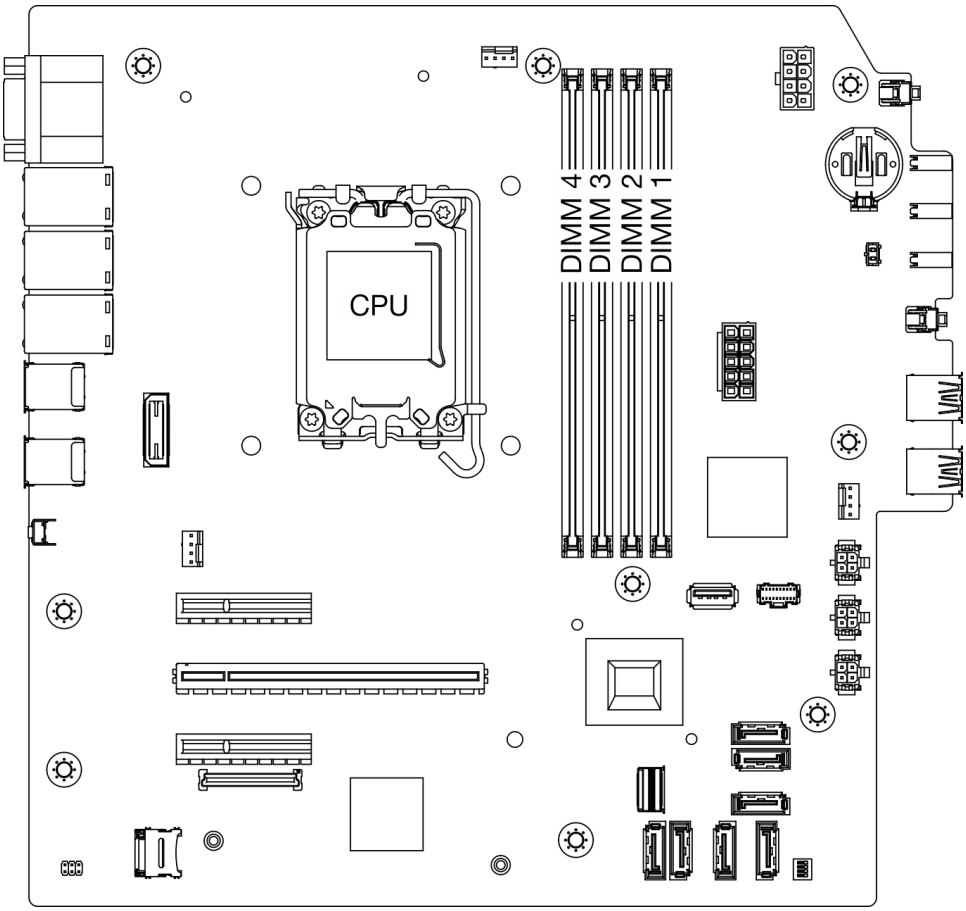

Figure 90. Memory modules and processors layout

Step 2. Open the retaining clips on each end of the memory module slot. If necessary, you can use a pointed tool to open the retaining clips due to space constraints. Pencils are not recommended as a tool as they may not be strong enough.

a. ❶ Place the tip of the tool in the recess on the top of the retaining clip.

b. ❷ Carefully rotate the retaining clip away from the memory module slot.

Attention: To avoid breaking the retaining clips or damaging the memory module slots, handle the clips gently.

Figure 91. Opening retaining clips

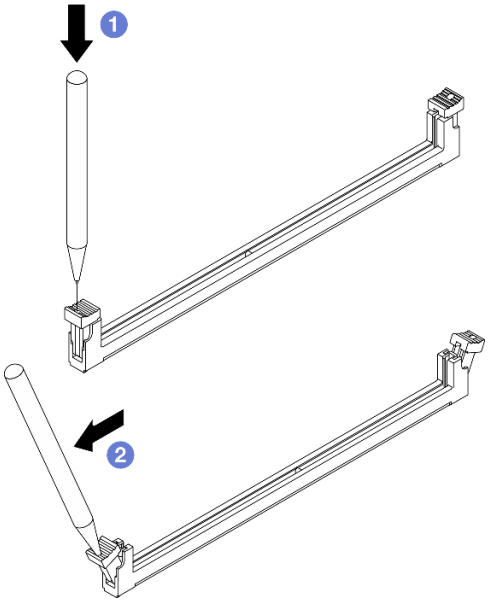

Step 3. Install the memory module into the slot.

a. ❶ Make sure the retaining clips are in the fully open position.

b. ❷ Align the memory module with the slot, and gently place the memory module on the slot with both hands.

c. ❸ Firmly press both ends of the memory module straight down into the slot until the retaining clips snap into the locked position.

Attention: If there is a gap between the memory module and the retaining clips, the memory module has not been correctly inserted. In this case, open the retaining clips, remove the memory module, and then reinsert it.

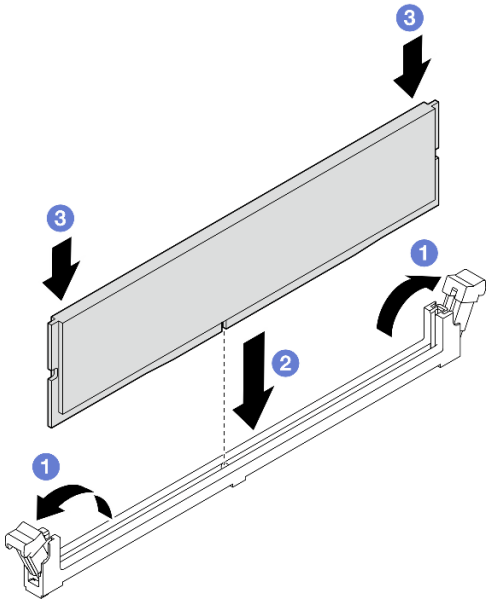

Figure 92. Memory module installation

After you finish

1. If applicable, install the optical drive cage. See “Install the optical drive cage” on page 90.
2. If applicable, install the optical drive. See “Install an optical drive” on page 86.
3. Install the server cover. See “Install the server cover” on page 157.
4. Complete the parts replacement. See “Complete the parts replacement” on page 159.

Demo video

Watch the procedure on YouTube

PCIe adapter replacement

Follow instructions in this section to remove and install a PCIe adapter.

Remove a PCIe adapter

Follow instructions in this section to remove a PCIe adapter.

About this task

S002

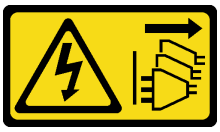

CAUTION:
The power-control button on the device and the power switch on the power supply do not turn off the electrical current supplied to the device. The device also might have more than one power cord. To remove all electrical current from the device, ensure that all power cords are disconnected from the power source.

Attention:

- Read “Installation Guidelines” on page 37 and “Safety inspection checklist” on page 38 to ensure that you work safely.
- Power off the server and peripheral devices and disconnect the power cords and all external cables. See “Power off the server” on page 43.
- If the server is in a rack, remove it from the rack. See “Remove the server from rack” on page 43.
- Remove any locking device that secures the server, such as a Kensington lock or a padlock.
- Place the server on its side with the cover up.

Notes:

- For a list of the supported PCIe adapters, see https://serverproven.lenovo.com.
- The PCIe adapter might look different from the illustration.

Procedure

Step 1. Make preparation for this task.

a. Remove the server cover. See “Remove the server cover” on page 154.

Attention: The heat sinks and processor could be very hot. To avoid burning yourself, wait for a few minutes after turning off the server before you remove the server cover.

Step 2. Disconnect all PCIe adapter cables from the system board. See Chapter 6 “Internal cable routing” on page 161.

Attention: To avoid damaging the system board, make sure to follow the instructions in Chapter 6 “Internal cable routing” on page 161 when disconnecting cables from the system board.

Step 3. Remove the PCIe adapter.

a. ❶ Rotate the PCIe adapter retainer clip to the open position.

b. ❷ Hold the PCIe adapter by both edges, and gently lift it out from the PCIe slot.

Note: The PCIe adapter might be clamped by the slot tightly. In this case, gently and evenly shake the PCIe adapter until the clamping force from the connector is significantly reduced and the adapter becomes easily removable.

Figure 93. Removing a PCIe adapter

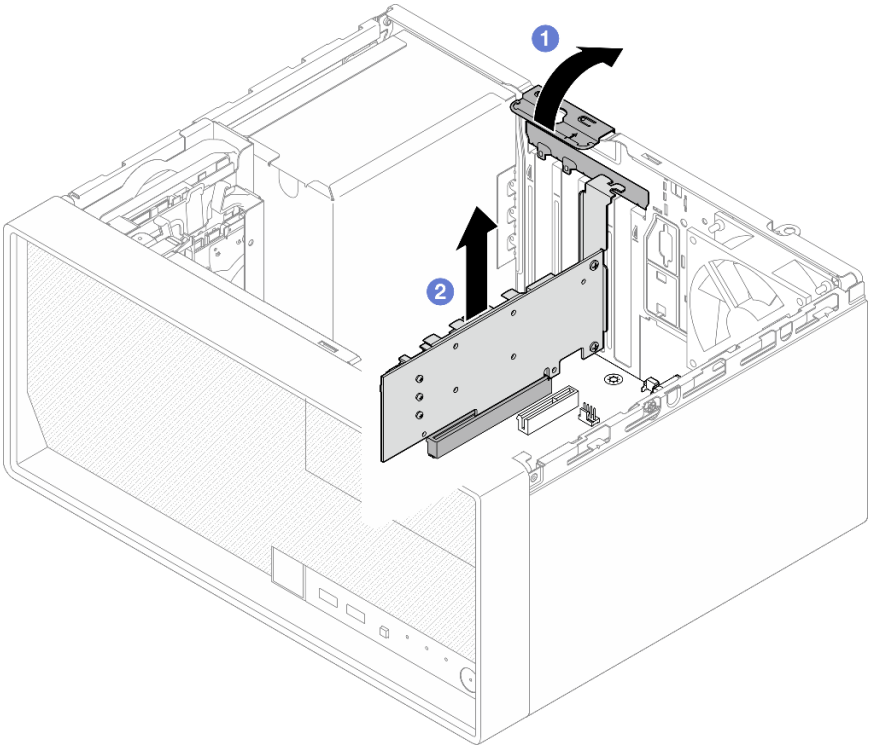

After you finish

1. Install another PCIe adapter if necessary. See “Install a PCIe adapter” on page 126. Otherwise, install a bracket to cover the vacancy on the chassis, and close the retainer.

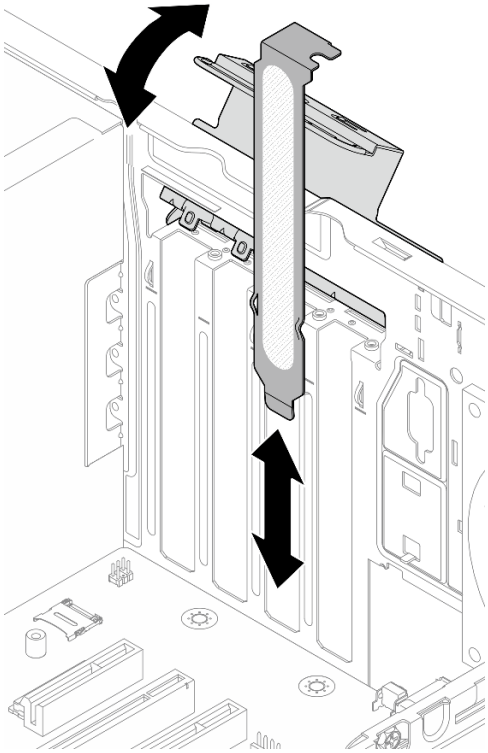

Figure 94. Installing a PCIe adapter bracket

2. If you are instructed to return the component or optional device, follow all packaging instructions, and use any packaging materials for shipping that are supplied to you.

Demo video

Watch the procedure on YouTube

Install a PCIe adapter

Follow instructions in this section to install a PCIe adapter.

About this task

S002

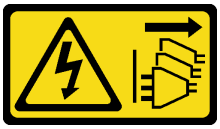

CAUTION:
The power-control button on the device and the power switch on the power supply do not turn off the electrical current supplied to the device. The device also might have more than one power cord. To remove all electrical current from the device, ensure that all power cords are disconnected from the power source.

Attention:

- Read “Installation Guidelines” on page 37 and “Safety inspection checklist” on page 38 to ensure that you work safely.
- Touch the static-protective package that contains the component to any unpainted metal surface on the server; then, remove it from the package and place it on a static-protective surface.

Notes:

- For a list of the supported PCIe adapters, see https://serverproven.lenovo.com.
- The PCIe adapter might look different from the illustration.

Procedure

Step 1. Make preparation for this task.

a. If a bracket is installed in the chassis, open the PCIe adapter retainer bracket and remove the bracket from the chassis. Keep the bracket for future use.

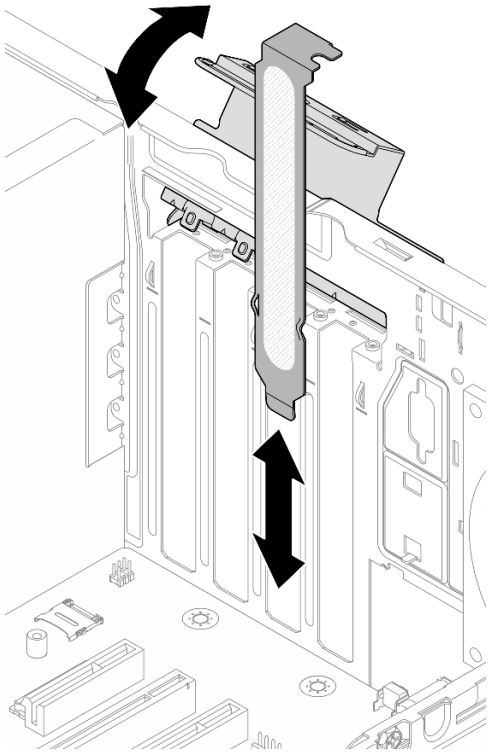

Figure 95. Removing a PCIe adapter bracket

b. Locate the applicable PCIe slot. For more information about the PCIe slots, see “Technical specifications” on page 3.

Step 2. Install the PCIe adapter.

a. ❶ Align the PCIe adapter to the slot; then, gently press both ends of the PCIe adapter until it is securely seated in the slot.

b. ❷ Rotate the PCIe adapter retainer towards the chassis until it snaps into locked position.

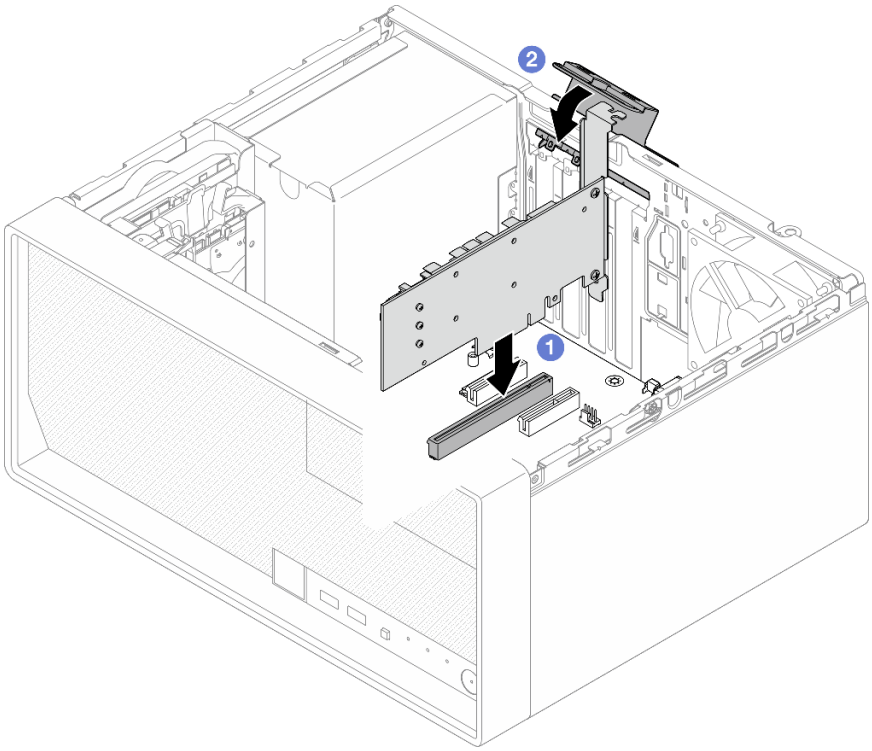

Figure 96. Installing a PCIe adapter

Step 3. Connect the PCIe adapter cables. For more information on RAID adapter cable routing, see Chapter 6 “Internal cable routing” on page 161.

After you finish

1. Install the server cover. See “Install the server cover” on page 157.
2. Complete the parts replacement. See “Complete the parts replacement” on page 159.

Demo video

Watch the procedure on YouTube

Power supply unit replacement

Follow instructions in this section to remove and install the power supply unit.

Remove the power supply unit

Follow instructions in this section to remove the power supply unit.

About this task

S001

DANGER

Electrical current from power, telephone, and communication cables is hazardous.
To avoid a shock hazard:

- **Connect all power cords to a properly wired and grounded electrical outlet/source.**
- **Connect any equipment that will be attached to this product to properly wired outlets/sources.**
- **When possible, use one hand only to connect or disconnect signal cables.**
- **Never turn on any equipment when there is evidence of fire, water, or structural damage.**
- **The device might have more than one power cord, to remove all electrical current from the device, ensure that all power cords are disconnected from the power source.**

S002

CAUTION:
The power-control button on the device and the power switch on the power supply do not turn off the electrical current supplied to the device. The device also might have more than one power cord. To remove all electrical current from the device, ensure that all power cords are disconnected from the power source.

S035

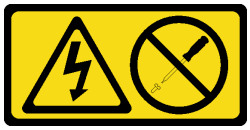

CAUTION:
Never remove the cover on a power supply or any part that has this label attached. Hazardous voltage, current, and energy levels are present inside any component that has this label attached. There are no serviceable parts inside these components. If you suspect a problem with one of these parts, contact a service technician.

Attention:

- Read "Installation Guidelines" on page 37 and "Safety inspection checklist" on page 38 to ensure that you work safely.
- Power off the server and peripheral devices and disconnect the power cords and all external cables. See "Power off the server" on page 43.
- If the server is in a rack, remove it from the rack. See "Remove the server from rack" on page 43.
- Remove any locking device that secures the server, such as a Kensington lock or a padlock.
- Place the server on its side with the cover up.

Procedure

Step 1. Make preparation for this task.

a. Remove the server cover. See "Remove the server cover" on page 154.

Attention: The heat sinks and processor could be very hot. To avoid burning yourself, wait for a few minutes after turning off the server before you remove the server cover.

b. If applicable, remove the simple-swap drive (bay 0-1). See "Remove a simple-swap drive (bay 0-1)" on page 53.

c. If applicable, remove the simple-swap drive cage (bay 0-1). See "Remove the drive cage (bay 0-1)" on page 61.

Step 2. Disconnect the processor power cable and system power cable from the system board. See Chapter 6 "Internal cable routing" on page 161.

Step 3. From the outside of the chassis, remove the four screws that secure the power supply unit to the chassis.

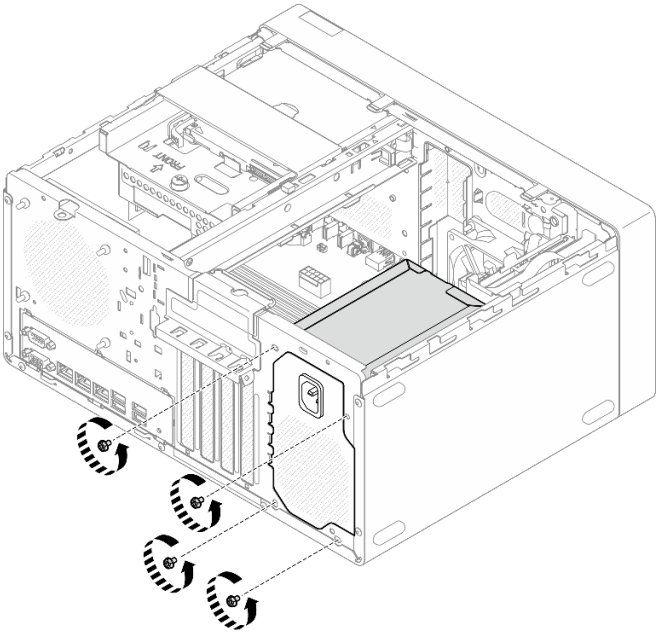

Figure 97. Removing the screws securing the power supply unit to chassis

Step 4. Remove the power supply unit from the chassis.

a. ❶ Press the release tab to disengage the power supply unit from the chassis.

b. ❶ Slide out the power supply unit; then, lift it out of the chassis.

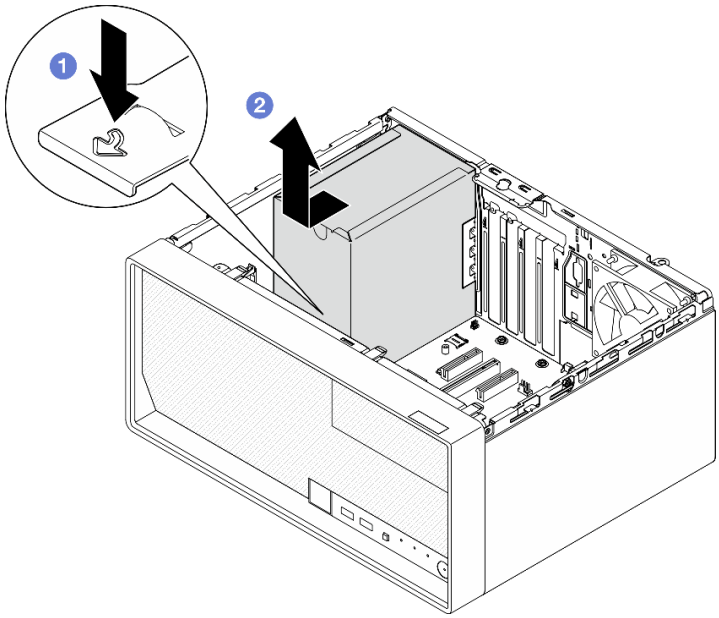

Figure 98. Removing the power supply unit

After you finish

1. Install a replacement unit. See "Install the power supply unit" on page 131.
2. If you are instructed to return the component or optional device, follow all packaging instructions, and use any packaging materials for shipping that are supplied to you.

Demo video

Watch the procedure on YouTube

Install the power supply unit

Follow instructions in this section to install the power supply unit.

About this task

S001

DANGER

Electrical current from power, telephone, and communication cables is hazardous.
To avoid a shock hazard:

- **Connect all power cords to a properly wired and grounded electrical outlet/source.**
- **Connect any equipment that will be attached to this product to properly wired outlets/sources.**
- **When possible, use one hand only to connect or disconnect signal cables.**
- **Never turn on any equipment when there is evidence of fire, water, or structural damage.**
- **The device might have more than one power cord, to remove all electrical current from the device, ensure that all power cords are disconnected from the power source.**

S002

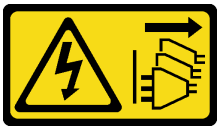

CAUTION:
The power-control button on the device and the power switch on the power supply do not turn off the electrical current supplied to the device. The device also might have more than one power cord. To remove all electrical current from the device, ensure that all power cords are disconnected from the power source.

S035

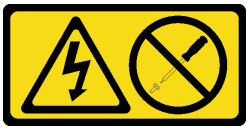

CAUTION:
Never remove the cover on a power supply or any part that has this label attached. Hazardous voltage, current, and energy levels are present inside any component that has this label attached. There are no serviceable parts inside these components. If you suspect a problem with one of these parts, contact a service technician.

Attention:

- Read "Installation Guidelines" on page 37 and "Safety inspection checklist" on page 38 to ensure that you work safely.
- Touch the static-protective package that contains the component to any unpainted metal surface on the server; then, remove it from the package and place it on a static-protective surface.
- Make sure the type of power supply is applicable to server drive configuration. See "Mechanical specifications" on page 6 for more information.

Procedure

Step 1. Lower the power supply unit into the chassis, and slide it toward the opening on the rear side of chassis until the release tab snaps into place.

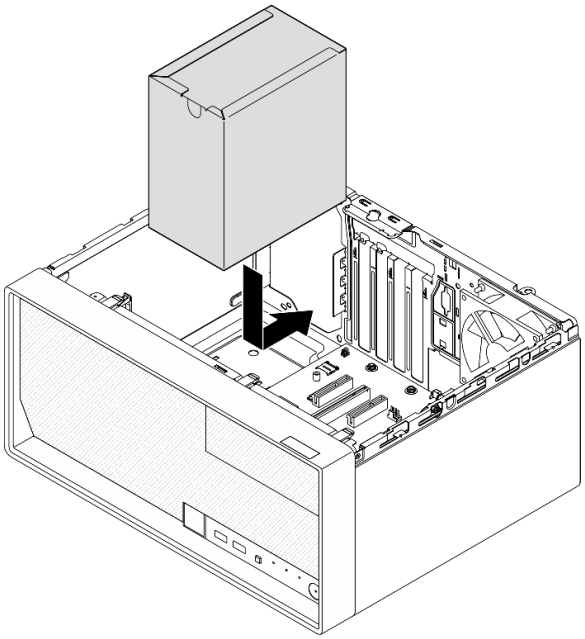

Figure 99. Installing the power supply unit to the chassis

Step 2. From outside of the chassis, fasten the four screws to secure the power supply unit to the chassis.

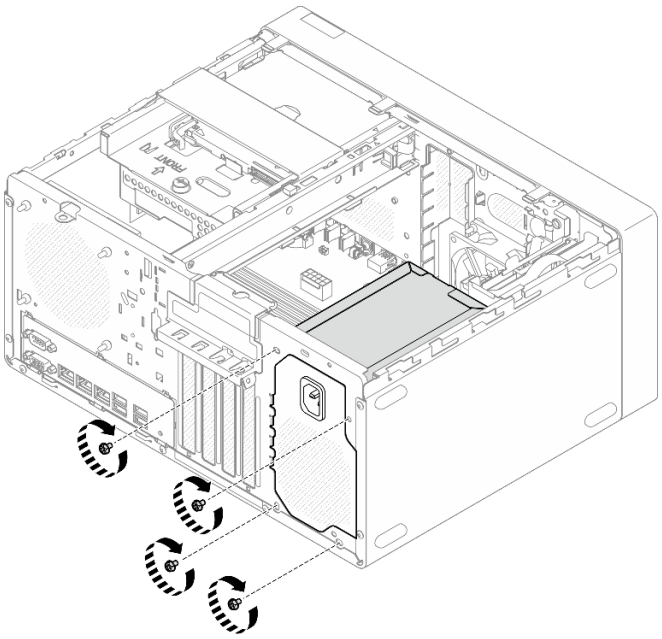

Figure 100. Securing the power supply unit to the chassis

Step 3. Connect the processor power cable and system power cable to the system board. See Chapter 6 “Internal cable routing” on page 161.

After you finish

1. Install the drive cage and the drive. See “Simple-swap drive and drive cage replacement (bay 0-1)” on page 53.

2. Install the server cover. See “Install the server cover” on page 157.
3. Complete the parts replacement. See “Complete the parts replacement” on page 159.

Demo video

Watch the procedure on YouTube

Processor replacement (trained technician only)

Follow instructions in this section to remove and install the processor.

Important: This task must be operated by trained technicians that are certified by Lenovo Service. Do not attempt to remove or install the part without proper training and qualification.

Attention: Before reusing a processor or heat sink, make sure you use Lenovo proven alcohol cleaning pad and thermal grease.

Remove the processor (trained technician only)

Follow instructions in this section to remove the processor. The procedure must be executed by a trained technician.

About this task

S002

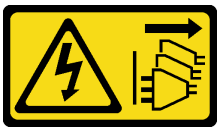

CAUTION:
The power-control button on the device and the power switch on the power supply do not turn off the electrical current supplied to the device. The device also might have more than one power cord. To remove all electrical current from the device, ensure that all power cords are disconnected from the power source.

Attention:

- Read “Installation Guidelines” on page 37 and “Safety inspection checklist” on page 38 to ensure that you work safely.
- Power off the server and peripheral devices and disconnect the power cords and all external cables. See “Power off the server” on page 43.
- If the server is in a rack, remove it from the rack. See “Remove the server from rack” on page 43.
- Remove any locking device that secures the server, such as a Kensington lock or a padlock.
- Place the server on its side with the cover up.

Procedure

Step 1. Make preparation for this task.

a. Remove the server cover. See “Remove the server cover” on page 154.

Attention: The heat sinks and processor could be very hot. To avoid burning yourself, wait for a few minutes after turning off the server before you remove the server cover.

b. If applicable, remove the optical drive. See “Remove an optical drive” on page 83.

c. If applicable, remove the optical drive cage. See “Remove an optical drive cage” on page 89.

d. Remove the heat sink and fan module. See “Remove the heat sink and fan module (trained technician only)” on page 99.

Step 2. Remove the processor.

a. ❶ Gently pull the handle away from the processor retainer.

b. ❷ Lift the handle.

c. ❸ Lift the socket retainer to the fully open position as illustrated.

d. ❹ Hold the processor by both sides and gently lift it away from the processor socket.

Notes:

1. Do not touch the gold contacts on the bottom of the processor.
2. Keep the processor socket clean from any object to prevent possible damages.

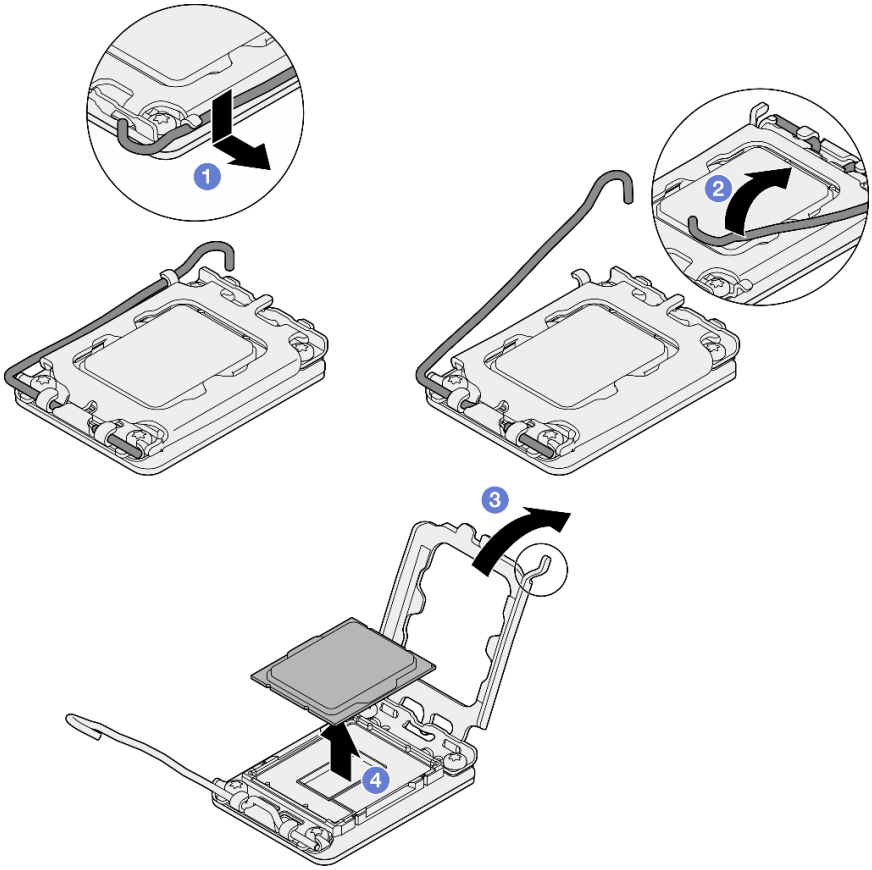

Figure 101. Removing the processor

After you finish

After removing the processor, perform one of the following tasks immediately:

- Install the replacement processor.
  1. Install the replacement processor to the system board. See “Install the processor (trained technician only)” on page 136.

2. Package the defective processor that was removed, and return it to Lenovo. To prevent any shipping damage, reuse the packaging of the new processor, and follow all available packaging instructions.

- Install the processor that you removed to the replacement system board.
  1. Install the removed processor to the replacement system board. See "Install the processor (trained technician only)" on page 136.
  2. Package the defective system board, and return it to Lenovo. To prevent any shipping damage, reuse the packaging of the new system board, and follow all available packaging instructions.

Demo video

Watch the procedure on YouTube

Install the processor (trained technician only)

Follow instructions in this section to install the processor. The procedure must be executed by a trained technician.

About this task

S002

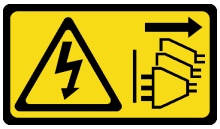

CAUTION:
The power-control button on the device and the power switch on the power supply do not turn off the electrical current supplied to the device. The device also might have more than one power cord. To remove all electrical current from the device, ensure that all power cords are disconnected from the power source.

Attention:

- Read "Installation Guidelines" on page 37 and "Safety inspection checklist" on page 38 to ensure that you work safely.
- Touch the static-protective package that contains the component to any unpainted metal surface on the server; then, remove it from the package and place it on a static-protective surface.
- Before reusing a processor that was removed from another system board, wipe the thermal grease from the processor with an alcohol cleaning pad, and dispose of the cleaning pad after all of the thermal grease is removed.

  Note: If you are applying new thermal grease on the top of the processor, make sure to do it after the alcohol has fully evaporated.
- Apply the thermal grease on the top of the processor with syringe by forming four uniformly spaced dots, while each dot consists of about 0.1 ml of thermal grease.

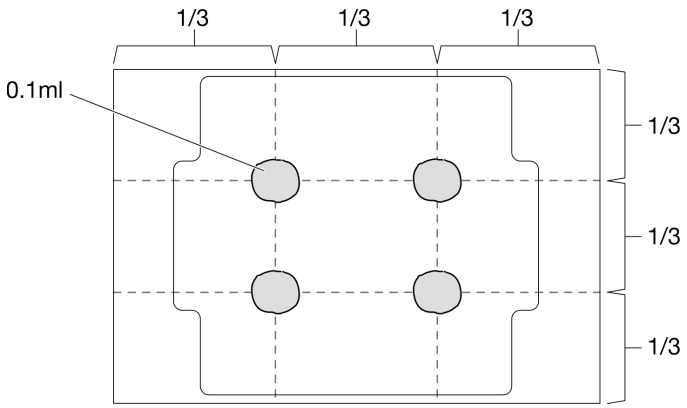

Figure 102. Proper shape of the thermal grease

Procedure

Step 1. Hold the processor by both sides, and align the following:

1. Align 1 the small notches on the processor to 2 the tabs on the socket.
2. Align 3 the small triangle of the processor to 4 the beveled corner on the socket.

Then, gently lower the processor evenly into the socket.

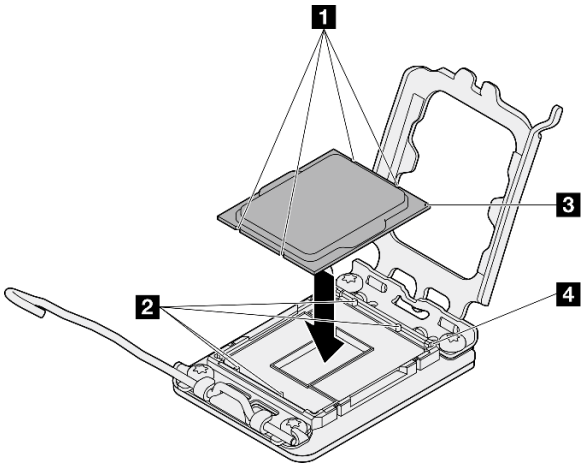

Figure 103. Installing the processor

Step 2. Close the processor retainer, and push the handle to the locked position.

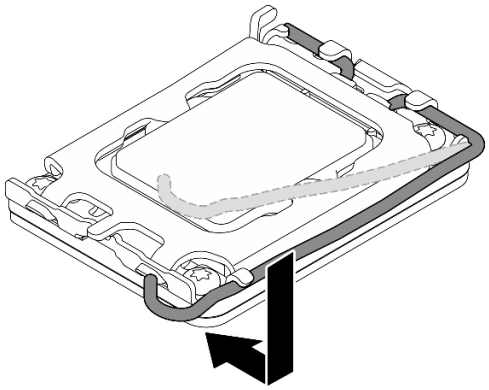

Figure 104. Closing the processor retainer

After you finish

1. Install the heat sink and the fan module. See "Install the heat sink and fan module (trained technician only)" on page 103.
2. If applicable, install the optical drive cage. See "Install the optical drive cage" on page 90.
3. If applicable, install the optical drive. See "Install an optical drive" on page 86.
4. Install the server cover. See "Install the server cover" on page 157.
5. Complete the parts replacement. See "Complete the parts replacement" on page 159.

Demo video

Watch the procedure on YouTube

System board replacement (trained technician only)

Follow instructions in this section to remove and install the system board.

Important: This task must be operated by trained technicians that are certified by Lenovo Service. Do not attempt to remove or install the part without proper training and qualification.

CAUTION:
Hazardous moving parts. Keep fingers and other body parts away.

CAUTION:

The heat sinks and processors might be very hot. Turn off the server and wait several minutes to let the server cool before removing the server cover.

Remove the firmware and RoT security module

Follow instructions in this section to remove the ThinkSystem V3 Firmware and Root of Trust Security Module (firmware and RoT security module). The procedure must be executed by a trained technician.

About this task

S002

CAUTION:
The power-control button on the device and the power switch on the power supply do not turn off the electrical current supplied to the device. The device also might have more than one power cord. To remove all electrical current from the device, ensure that all power cords are disconnected from the power source.

Important: This task must be operated by trained technicians that are certified by Lenovo Service. Do no attempt to remove or install the part without proper training and qualification.

Attention:

- Read "Installation Guidelines" on page 37 and "Safety inspection checklist" on page 38 to ensure that you work safely.
- Power off the server and peripheral devices and disconnect the power cords and all external cables. See "Power off the server" on page 43.
- If the server is in a rack, remove it from the rack. See "Remove the server from rack" on page 43.
- Remove any locking device that secures the server, such as a Kensington lock or a padlock.
- Place the server on its side with the cover up.
- Prevent exposure to static electricity, which might lead to system halt and loss of data, by keeping static-sensitive components in their static-protective packages until installation, and handling these devices with an electrostatic-discharge wrist strap or other grounding system.
- After replacing the firmware and RoT security module, update the firmware to the specific version supported by the server. Make sure that you have the required firmware or a copy of the pre-existing firmware before you proceed.

Procedure

Step 1. Make preparation for this task.

a. Perform OneCLI commands or XCC actions to back up the UEFI and XCC settings. See https://pubs.lenovo.com/lxce-onecli/config_backup or https://pubs.lenovo.com/xcc2/NN1ia_c_backupthexcc.html.

b. Remove the server cover. See "Remove the server cover" on page 154.

Attention: The heat sinks and processor could be very hot. To avoid burning yourself, wait for a few minutes after turning off the server before you remove the server cover.

c. If applicable, remove the drive cage (bay 3). See "Remove the drive cage (bay 3)" on page 79.

d. If applicable, remove the PCIe adapter in slot 3. See "Remove a PCIe adapter" on page 124.

e. If applicable, remove the M.2 boot adapter. See "Remove the M.2 boot adapter" on page 109.

Step 2. Remove the firmware and RoT security module.

a. ❶ Loosen the two screws on the firmware and RoT security module.

b. ❷ Lift the firmware and RoT security module out of the system board.

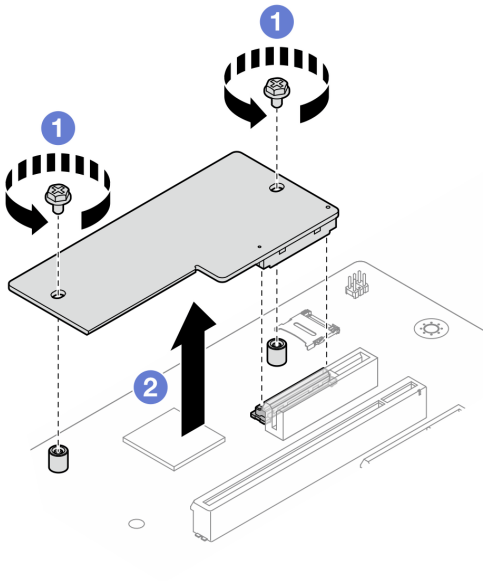

Figure 105. Firmware and RoT security module removal

After you finish

1. Install a replacement unit. See "Install the firmware and RoT security module" on page 140.
2. If you are instructed to return the component or optional device, follow all packaging instructions, and use any packaging materials for shipping that are supplied to you.

Demo video

Watch the procedure on YouTube

Install the firmware and RoT security module

Follow instructions in this section to install the ThinkSystem V3 Firmware and Root of Trust Security Module (firmware and RoT security module). The procedure must be executed by a trained technician.

About this task

Important: This task must be operated by trained technicians that are certified by Lenovo Service. Do no attempt to remove or install the part without proper training and qualification.

Attention:

- Read "Installation Guidelines" on page 37 and "Safety inspection checklist" on page 38 to ensure that you work safely.
- Power off the server and peripheral devices and disconnect the power cords and all external cables. See "Power off the server" on page 43.
- Prevent exposure to static electricity, which might lead to system halt and loss of data, by keeping static-sensitive components in their static-protective packages until installation, and handling these devices with an electrostatic-discharge wrist strap or other grounding system.

Firmware and driver download: You might need to update the firmware or driver after replacing a component.

- Go to https://datacentersupport.lenovo.com/tw/en/products/servers/thinksystem/st50v3/7df3/downloads/driver-list/ to see the latest firmware and driver updates for your server.
- Go to "Update the firmware" on page 178 for more information on firmware updating tools.

Procedure

Step 1. Touch the static-protective package that contains the component to any unpainted metal surface on the server; then, remove it from the package and place it on a static-protective surface.

Step 2. Install the firmware and RoT security module.

a. ❶ Lower the firmware and RoT security module onto the system board and ensure that the connector on the module is correctly inserted into the slot on the system board.

b. ❷ Tighten the two screws to secure the firmware and RoT security module in place.

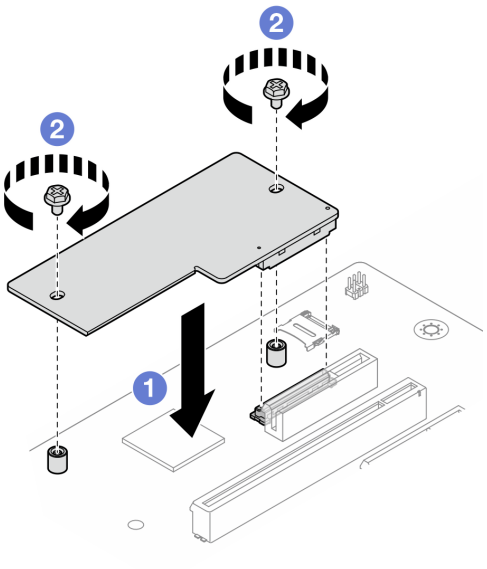

Figure 106. Firmware and RoT security module installation

After you finish

1. If applicable, install the drive cage (bay 3). See "Install the drive cage (bay 3)" on page 81.
2. If applicable, install the M.2 boot adapter. See "Install the M.2 boot adapter" on page 111
3. Install the PCIe adapter. See "Install a PCIe adapter" on page 126.
4. Reconnect all the cables that were removed. See Chapter 6 "Internal cable routing" on page 161.
5. Install the server cover. See "Install the server cover" on page 157.
6. Complete the parts replacement. See "Complete the parts replacement" on page 159.
7. Update the UEFI, XCC and LXPM firmware to the specific version supported by the server. See https://support.lenovo.com/us/en/solutions/TT3485.
8. Perform OneCLI commands or XCC actions to restore the UEFI and XCC settings. See https://pubs.lenovo.com/lxce-onecli/onecli_r_restore_command or https://pubs.lenovo.com/xcc2/NN1ia_c_restorethexcc.html.
9. Optionally, do the following if needed:

- Hide TPM. See “Hide/observe TPM” on page 142.
- Update the TPM firmware. See “Update the TPM firmware” on page 143.
- Enable UEFI Secure Boot. See “Enable UEFI Secure Boot” on page 143.

Demo video

Watch the procedure on YouTube

Hide/observe TPM

TPM is enabled by default to encrypt data transfer for system operation. Optionally, you can disable TPM using Unified Extensible Firmware Interface (UEFI) or Lenovo XClarity Essentials OneCLI.

Using UEFI

For details, see “Hide TPM from OS” in *UEFI User Guide* at https://pubs.lenovo.com/uefi-overview/.

Using Lenovo XClarity Essentials OneCLI

To disable TPM, do the following:

1. Download and install Lenovo XClarity Essentials OneCLI.

   To download Lenovo XClarity Essentials OneCLI, go to the following site:

   https://datacentersupport.lenovo.com/solutions/HT116433

2. Run the following command:

   `OneCli.exe config set TrustedComputingGroup.HideTPMfromOS "Yes" -bmc <userid>:<password>@<ip_address>`

   where:

   - *<userid>:<password>* are the credentials used to access the BMC (Lenovo XClarity Controller interface) of your server. The default user ID is USERID, and the default password is PASSW0RD (zero, not an uppercase o)
   - *<ip_address>* is the IP address of the BMC.

   Example:

```
D:\onecli>OneCli.exe config set UEFI.TrustedComputingGroup_TPMDevice "Disabled" --bmc USERID:PASSWORD@10.245.38.64
[1s]Certificate check finished [100%][==============================================================================>]
Start to connect BMC at 10.245.38.64 to apply config set
Invoking SET command ...
UEFI.TrustedComputingGroup_TPMDevice=Disabled
Changes completed successfully, but these changes will not take effect until next reboot.
Succeed.
```

3. Reboot the system.

If you want to enable TPM again, run the following command and reboot the system:
`OneCli.exe config set TrustedComputingGroup.HideTPMfromOS "No" -bmc <userid>:<password>@<ip_address>`

Example:

```
D:\onecli>OneCli.exe config set UEFI.TrustedComputingGroup_TPMDevice "Enabled" --bmc USERID:PASSWORD@10.245.38.64
[1s]Certificate check finished [100%][==============================================================================>]
Start to connect BMC at 10.245.38.64 to apply config set
Invoking SET command ...
UEFI.TrustedComputingGroup_TPMDevice=Enabled
Changes completed successfully, but these changes will not take effect until next reboot.
Succeed.
```

Update the TPM firmware

Optionally, you can update the TPM firmware using Lenovo XClarity Essentials OneCLI.

Note: TPM firmware update is irreversible. After update, the TPM firmware cannot be downgraded to earlier versions.

TPM firmware version

Follow the procedure below to see the TPM firmware version:

From Lenovo XClarity Provisioning Manager

1. Start the server and press the key specified in the on-screen instructions to display the Lenovo XClarity Provisioning Manager interface. (For more information, see the “Startup” section in the LXPM documentation compatible with your server at https://pubs.lenovo.com/lxpm-overview/.)
2. If the power-on Administrator password is required, enter the password.
3. From the UEFI Setup page, click **System Settings → Security → Trusted Platform Module → TPM 2.0 → TPM Firmware Version**.

Update the TPM firmware

To update the TPM firmware, do the following:

1. Download and install Lenovo XClarity Essentials OneCLI.

   To download Lenovo XClarity Essentials OneCLI, go to the following site:

   https://datacentersupport.lenovo.com/solutions/HT116433

2. Run the following command:
   `OneCli.exe config set TrustedComputingGroup.DeviceOperation "Update to TPM 2.0 firmware version <x.x.x.x>" --bmc <userid>:<password>@<ip_address>`

   where:

   - *<x.x.x.x>* is the target TPM version.

     e.g. TPM 2.0 (7.2.1.0) -> TPM 2.0 (7.2.2.0):

     `OneCli.exe config set TrustedComputingGroup.DeviceOperation "Update to TPM 2.0 firmware version 7.2.2.0" --bmc <userid>:<password>@<ip_address>`

   - *<userid>:<password>* are the credentials used to access the BMC (Lenovo XClarity Controller interface) of your server. The default user ID is USERID, and the default password is PASSW0RD (zero, not an uppercase o).
   - *<ip_address>* is the IP address of the BMC.

Enable UEFI Secure Boot

Optionally, you can enable UEFI Secure Boot.

There are two methods available to enable UEFI Secure Boot:

- From Lenovo XClarity Provisioning Manager

  To enable UEFI Secure Boot from Lenovo XClarity Provisioning Manager:

  1. Start the server and press the key specified in the on-screen instructions to display the Lenovo XClarity Provisioning Manager interface. (For more information, see the “Startup” section in the LXPM documentation compatible with your server at https://pubs.lenovo.com/lxpm-overview/.)
  2. If the power-on Administrator password is required, enter the password.

3. From the UEFI Setup page, click **System Settings → Security → Secure Boot Configuration → Secure Boot Setting**.
4. Enable Secure Boot and save the settings.

Note: If disabling UEFI secure boot is needed, select Disable in step 4.

- From Lenovo XClarity Essentials OneCLI

  To enable UEFI Secure Boot from Lenovo XClarity Essentials OneCLI:

  1. Download and install Lenovo XClarity Essentials OneCLI.

     To download Lenovo XClarity Essentials OneCLI, go to the following site:

     https://datacentersupport.lenovo.com/solutions/HT116433

  2. Run the following command to enable Secure Boot:
     `OneCli.exe config set UEFI.SecureBootConfiguration_SecureBootSetting Enabled --bmc` *<userid>:<password>@<ip_address>*

     where:

     – *<userid>:<password>* are the credentials used to access the BMC (Lenovo XClarity Controller interface) of your server. The default user ID is USERID, and the default password is PASSW0RD (zero, not an uppercase o)

     – *<ip_address>* is the IP address of the BMC.

     For more information about the Lenovo XClarity Essentials OneCLI `set` command, see:

     https://pubs.lenovo.com/lxce-onecli/onecli_r_set_command

Note: If disabling UEFI secure boot is needed, run the following command:
`OneCli.exe config set UEFI.SecureBootConfiguration_SecureBootSetting Disabled --bmc` *<userid>:<password>@<ip_address>*

Remove the system board

Follow instructions in this section to remove the system board. The procedure must be executed by a trained technician.

About this task

S002

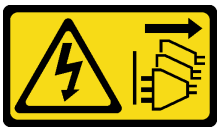

CAUTION:
The power-control button on the device and the power switch on the power supply do not turn off the electrical current supplied to the device. The device also might have more than one power cord. To remove all electrical current from the device, ensure that all power cords are disconnected from the power source.

Important:

- This task must be operated by trained technicians that are certified by Lenovo Service. Do no attempt to remove or install the part without proper training and qualification.

- When removing the memory modules, label the slot number on each memory module, remove all the memory modules from the system board, and set them aside on a static-protective surface for reinstallation.
- **When disconnecting cables, make a list of each cable and record the connectors the cable is connected to, and use the record as a cabling checklist after installing the new system board.**

Attention:

- Read "Installation Guidelines" on page 37 and "Safety inspection checklist" on page 38 to ensure that you work safely.
- Power off the server and peripheral devices and disconnect the power cords and all external cables. See "Power off the server" on page 43.
- If the server is in a rack, remove it from the rack. See "Remove the server from rack" on page 43.
- Remove any locking device that secures the server, such as a Kensington lock or a padlock.
- Place the server on its side with the cover up.

Procedure

Step 1. Make preparation for this task.

a. Record all system configuration information, such as Lenovo XClarity Controller IP addresses, vital product data, and the machine type, model number, serial number, Universally Unique Identifier, and asset tag of the server.

b. Save the system configuration to an external device with Lenovo XClarity Essentials.

c. Save the system event log to external media.

d. Remove the server cover. See "Remove the server cover" on page 154.

e. Remove the front bezel. See "Remove the front bezel" on page 97.

f. If applicable, remove the optical drive. See "Remove an optical drive" on page 83.

g. If applicable, remove the optical drive cage. See "Remove an optical drive cage" on page 89.

h. Remove the cage bar. See step 3 in "Remove the server cover" on page 154.

i. Remove the intrusion switch. See "Remove the intrusion switch" on page 106.

j. If applicable, remove the drive cage (bay 3). See "Remove the drive cage (bay 3)" on page 79.

k. Remove the rear system fan. See "Remove the fan (front and rear)" on page 92.

l. Remove the heat sink and fan module. See "Remove the heat sink and fan module (trained technician only)" on page 99.

m. Remove the M.2 boot adapter. See "Remove the M.2 boot adapter" on page 109.

n. Remove the PCIe adapters. See "Remove a PCIe adapter" on page 124.

o. Remove the memory modules. See "Remove a memory module" on page 118.

p. Remove the processor. See "Remove the processor (trained technician only)" on page 134.

q. Remove the firmware and RoT security module. See "Remove the firmware and RoT security module" on page 139.

Step 2. Remove the front I/O bracket.

a. Remove the screw the secures the front I/O bracket to the chassis.

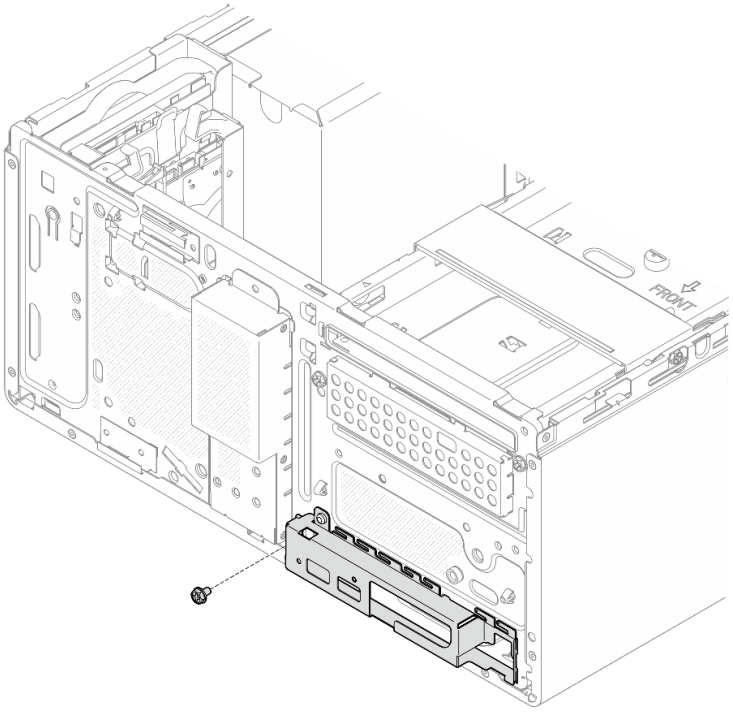

Figure 107. Removing the screw that secures the front I/O bracket to the chassis

b. ❶ Rotate the left end of the front I/O bracket away from the chassis.

c. ❷ Remove the front I/O bracket from the chassis.

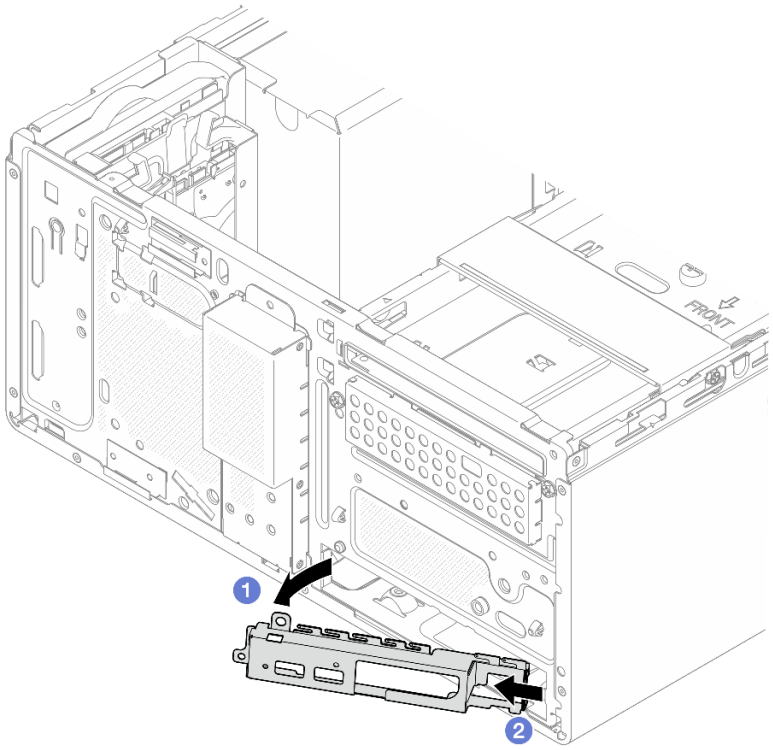

Figure 108. Removing the front I/O bracket from the chassis

Step 3. Disconnect all the cables connected to the system board.

Attention: To avoid damaging the system board, make sure to follow the instructions in Chapter 6 “Internal cable routing” on page 161 when disconnecting cables from the system board.

Step 4. Remove the nine screws that secure the system board in the sequence shown on the illustration below. Keep the screws for future use.

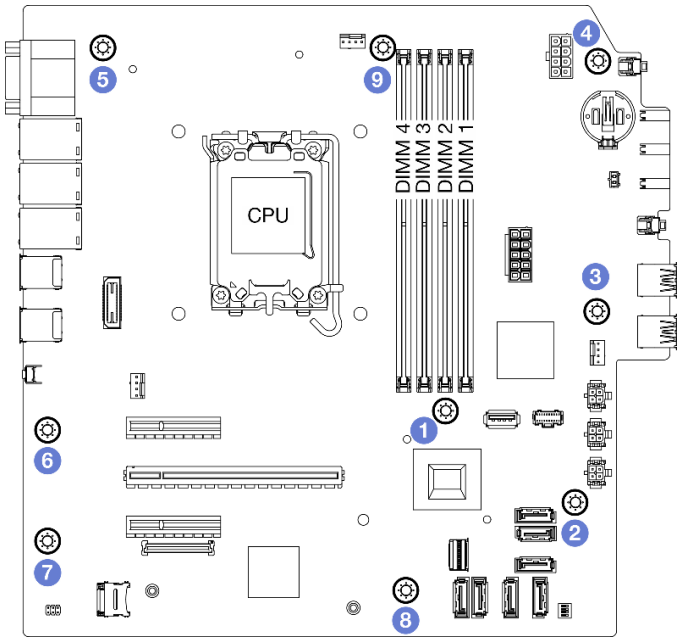

Figure 109. System-board screws removal sequence

Step 5. Remove the system board from the chassis.

a. ❶ Slide the system board toward the front of the server to release the serial port connector from the chassis.

b. ❷ Gently grasp the system board by the edges; then, tilt the system board, and remove it from the chassis.

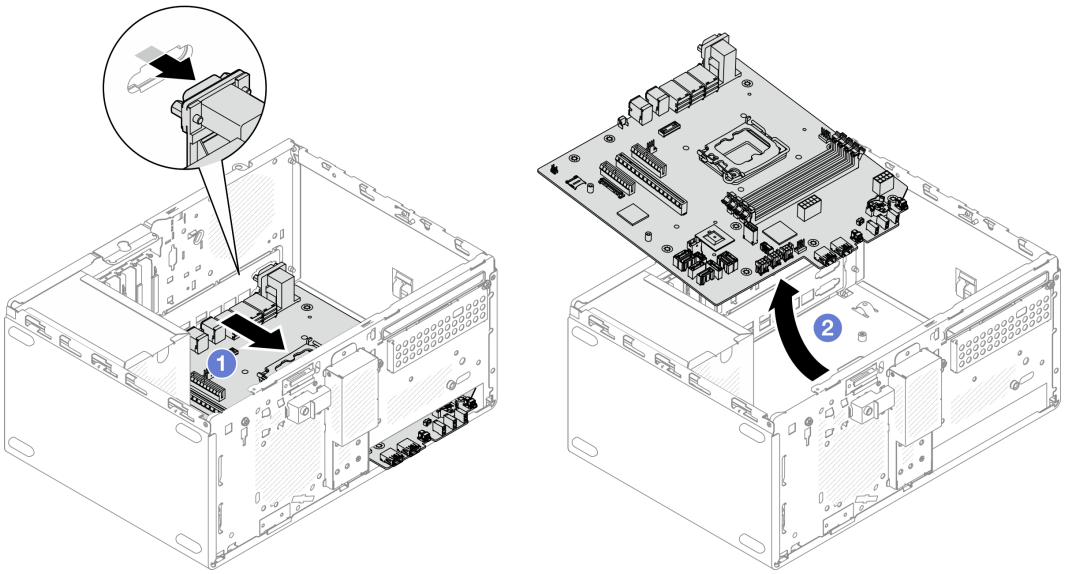

Figure 110. Removing the system board from the chassis

After you finish

- If you are instructed to return the component or optional device, follow all packaging instructions, and use any packaging materials for shipping that are supplied to you.

Important: Before you return the system board, make sure that you install the CPU socket covers from the new system board. To replace a CPU socket cover:

1. Take a socket cover from the CPU socket assembly on the new system board and orient it correctly above the CPU socket assembly on the removed system board.
2. Gently press down the socket cover legs to the CPU socket assembly, pressing on the edges to avoid damage to the socket pins. You might hear a click on the socket cover is securely attached.
3. **Make sure** that the socket cover is securely attached to the CPU socket assembly.

- If you plan to recycle the component, see "Disassemble the system board for recycle" on page 211.

Demo video

Watch the procedure on YouTube

Install the system board

Follow instructions in this section to install the system board. The procedure must be executed by a trained technician.

About this task

S002

CAUTION:
The power-control button on the device and the power switch on the power supply do not turn off the electrical current supplied to the device. The device also might have more than one power cord. To remove all electrical current from the device, ensure that all power cords are disconnected from the power source.

Attention:

- Read "Installation Guidelines" on page 37 and "Safety inspection checklist" on page 38 to ensure that you work safely.
- Touch the static-protective package that contains the drive to any unpainted metal surface on the server; then, remove the drive from the package and place it on a static-protective surface.

Firmware and driver download: You might need to update the firmware or driver after replacing a component.

- Go to https://datacentersupport.lenovo.com/tw/en/products/servers/thinksystem/st50v3/7df3/downloads/driver-list/ to see the latest firmware and driver updates for your server.
- Go to "Update the firmware" on page 178 for more information on firmware updating tools.

Procedure

Step 1. Install the system board.

a. ❶ Tilt the system board, and align the connectors with the corresponding opening on the front of the chassis. Then, gently lower the system board into the chassis, and insert the connectors into the slot on the front of the chassis.

b. ❷ Slide the system board toward the rear of the chassis until the system board is secured in place.

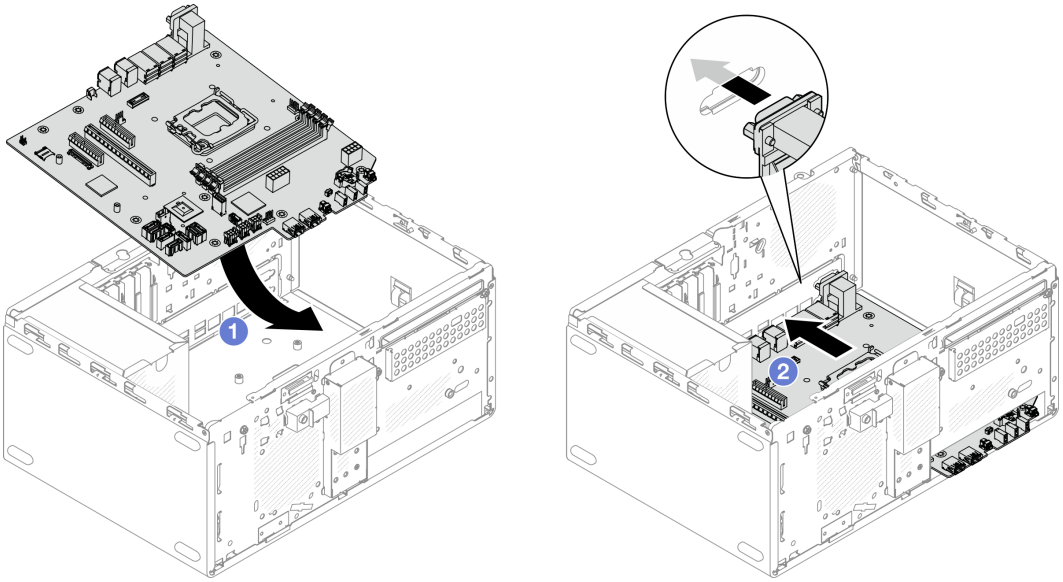

Figure 111. Installing the system board into the chassis

Step 2. Secure the system board to the chassis with nine screws in the sequence shown on the illustration below.

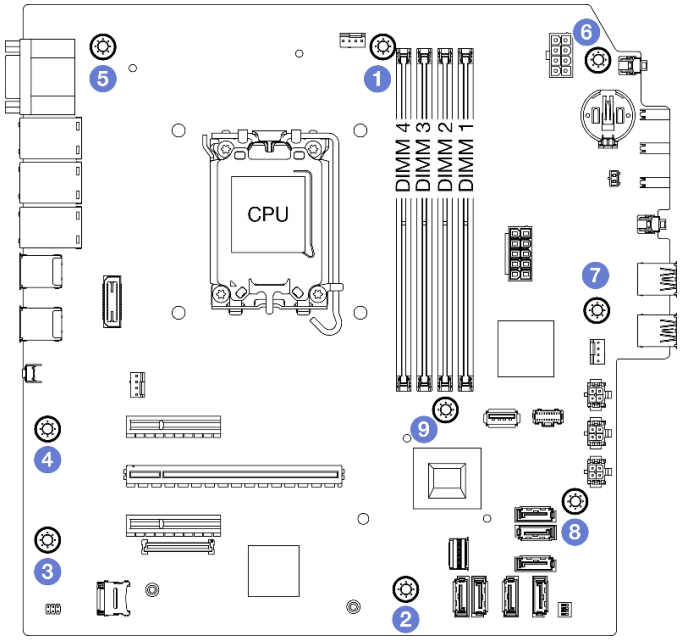

Figure 112. Installing the system board into the chassis

After you finish

Note: Make sure the CMOS battery is installed on the system board. See "Install the CMOS battery (CR2032)" on page 50.

1. Install the front I/O bracket.

a. ❶ There is a small tab on the right side of the front I/O bracket. Place the tab behind the front I/O bracket slot on the chassis.

b. ❷ Align the guide hole and screw hole on the front I/O bracket with the guide pin and screw slot on the chassis; then, install the front I/O bracket to the chassis.

Note: Make sure the small tab on the right side of the front I/O bracket is placed behind the chassis.

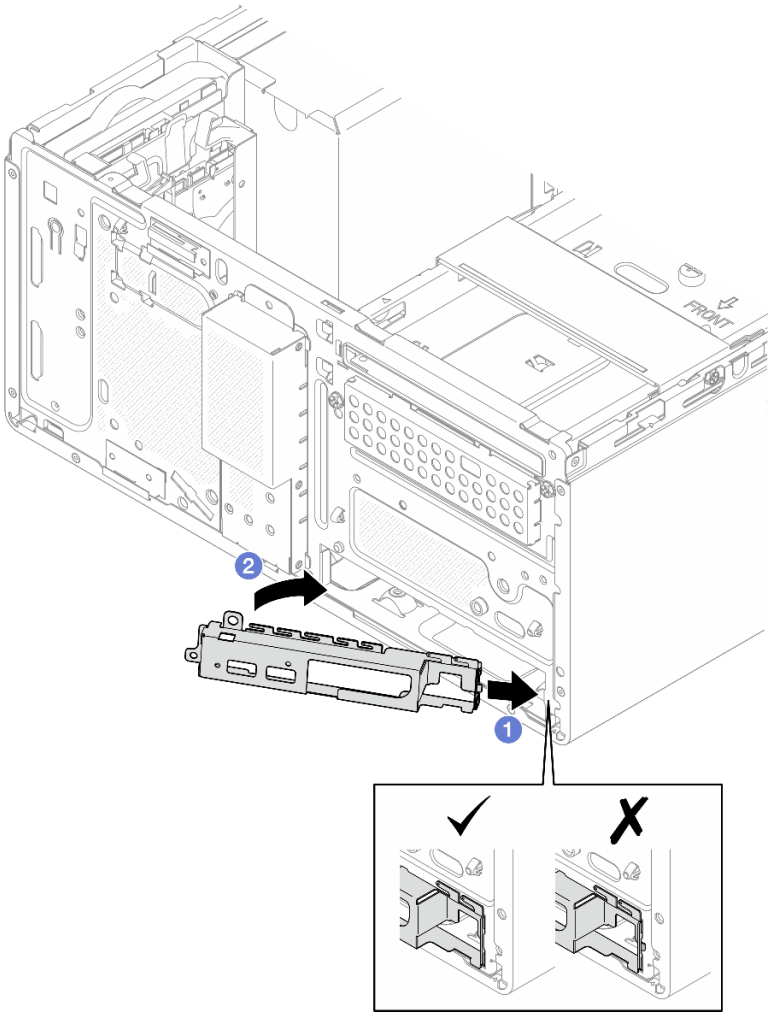

Figure 113. Installing the front I/O bracket to the chassis

c. Fasten the screw to secure the front I/O bracket to the chassis.

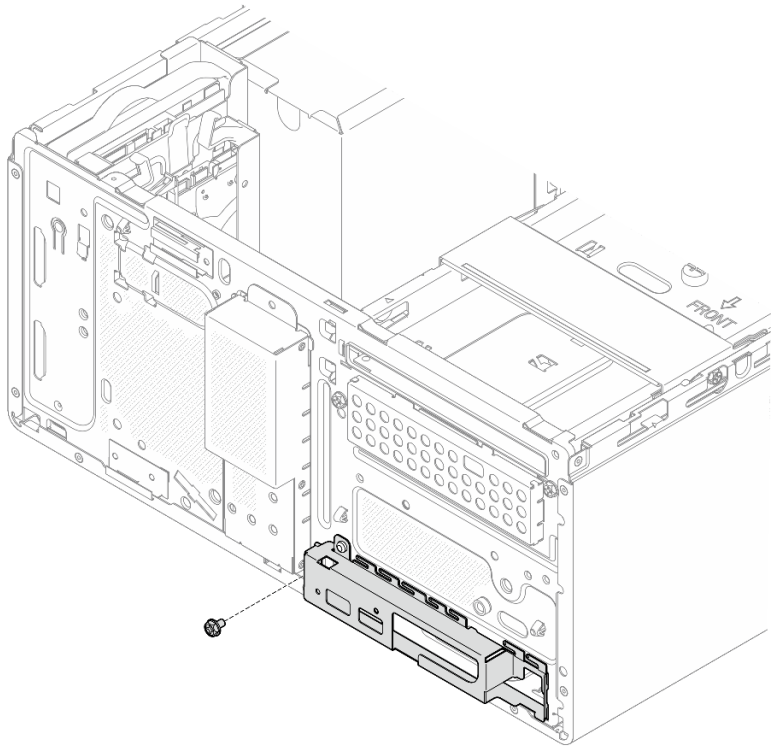

Figure 114. Securing the front I/O bracket to the chassis

2. Reconnect all the required cables to the same connectors on the system board as the defective system board.
3. Install the firmware and RoT security module. See “Install the firmware and RoT security module” on page 140.
4. Install the processor. See “Install the processor (trained technician only)” on page 136.
5. Install the memory module. See “Install a memory module” on page 121.
6. Install the PCIe adapter. See “Install a PCIe adapter” on page 126.
7. Install the M.2 boot adapter. See “Install the M.2 boot adapter” on page 111.
8. Install the heat sink and fan module. See “Install the heat sink and fan module (trained technician only)” on page 103.
9. Install the rear system fan. See “Install the fan (front and rear)” on page 95.
10. If applicable, install the drive cage (bay 3). See “Install the drive cage (bay 3)” on page 81.
11. Install the intrusion switch. See “Install the intrusion switch” on page 107.
12. Install the cage bar. See step 3 in “Install the server cover” on page 157.
13. If applicable, install the optical drive cage. See “Install the optical drive cage” on page 90.
14. If applicable, install the optical drive. See “Install an optical drive” on page 86.
15. Install the front bezel. See “Install the front bezel” on page 98.
16. Install the server cover. See “Install the server cover” on page 157.
17. Complete the parts replacement. See “Complete the parts replacement” on page 159.
18. Update the vital product data (VPD). See “Update the Vital Product Data (VPD)” on page 153. Machine type number and serial number can be found on the ID label. See “Identify the server and access the Lenovo XClarity Controller” on page 31.

19. Optionally, enable UEFI Secure Boot. See "Enable UEFI Secure Boot" on page 143.

Demo video

Watch the procedure on YouTube

Update the Vital Product Data (VPD)

Use this topic to update the Vital Product Data (VPD).

- **(Required)** Machine type
- **(Required)** Serial number
- **(Required)** System model
- (Optional) Asset tag
- (Optional) UUID

Recommended tools:

- Lenovo XClarity Provisioning Manager
- Lenovo XClarity Essentials OneCLI commands

Using Lenovo XClarity Provisioning Manager

Steps:

1. Start the server and press the key according to the on-screen instructions. The Lenovo XClarity Provisioning Manager interface is displayed by default.
2. Click ⚙ on the top right corner of the Lenovo XClarity Provisioning Manager main interface.
3. Click **Update VPD**; then, follow on-screen instructions to update the VPD.

Using Lenovo XClarity Essentials OneCLI commands

- Updating **machine type**
  `onecli config set SYSTEM_PROD_DATA.SysInfoProdName` *<m/t_model> [access_method]*
- Updating **serial number**
  `onecli config set SYSTEM_PROD_DATA.SysInfoSerialNum` *<s/n> [access_method]*
- Updating **system model**

  `onecli config set SYSTEM_PROD_DATA.SysInfoProdIdentifier` *<system model>* `[access_method]`
- Updating **asset tag**
  `onecli config set SYSTEM_PROD_DATA.SysEncloseAssetTag` *<asset_tag> [access_method]*
- Updating **UUID**
  `onecli config createuuid SYSTEM_PROD_DATA.SysInfoUUID` *[access_method]*

Variable	Description
<m/t_model>	The server machine type and model number. Type `xxxxyyyyyy`, where `xxxx` is the machine type and `yyyyyy` is the server model number.
<s/n>	The serial number on the server. Type `zzzzzzzz` (length 8-10 characters), where `zzzzzzzz` is the serial number.

<system model>	The system model on the server. Type `system yyyyyyyy`, where *yyyyyyyy* is the product identifier.
<asset_tag>	The server asset tag number. Type `aaaaaaaaaaaaaaaaaaaaaaaaaaaaaaaa`, where `aaaaaaaaaaaaaaaaaaaaaaaaaaaaaaaa` is the asset tag number.
[access_method]	The access method that you select to access the target server. • Online KCS (unauthenticated and user restricted): You can directly delete *[access_method]* from the command. • Online authenticated LAN: In this case, specify below LAN account information at the end of the OneCLI command: `--bmc-username` *<user_id>* `--bmc-password` *<password>* • Remote WAN/LAN: In this case, specify below XCC account information and IP address at the end of the OneCLI command: `--bmc` *<bmc_user_id>*:*<bmc_password>*@*<bmc_external_IP>* **Notes:** – *<bmc_user_id>* The BMC account name (1 of 12 accounts). The default value is USERID. – *<bmc_password>* The BMC account password (1 of 12 accounts).

Server cover replacement

Follow instructions in this section to remove and install the server cover.

Remove the server cover

Follow instructions in this section to remove the server cover.

About this task

S002

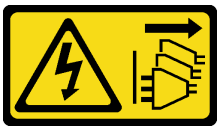

CAUTION:
The power-control button on the device and the power switch on the power supply do not turn off the electrical current supplied to the device. The device also might have more than one power cord. To remove all electrical current from the device, ensure that all power cords are disconnected from the power source.

S014

CAUTION:
Hazardous voltage, current, and energy levels might be present. Only a qualified service technician is authorized to remove the covers where the label is attached.

S033

CAUTION:
Hazardous energy present. Voltages with hazardous energy might cause heating when shorted with metal, which might result in spattered metal, burns, or both.

Attention:

- Read "Installation Guidelines" on page 37 and "Safety inspection checklist" on page 38 to ensure that you work safely.
- Power off the server and peripheral devices and disconnect the power cords and all external cables. See "Power off the server" on page 43.
- If the server is in a rack, remove it from the rack. See "Remove the server from rack" on page 43.
- Remove any locking device that secures the server, such as a Kensington lock or a padlock.
- Place the server on its side with the cover up.

Procedure

Step 1. ❶ Use a screwdriver to remove the two screws that secure the server cover to the chassis.

Step 2. ❷ Slide the server cover away from the front bezel, and lift it up from the chassis. Reserve the screws to be used for reinstalling the server cover.

Attention:

- The heat sinks and processor could be very hot. To avoid burning yourself, wait for a few minutes after turning off the server before you remove the server cover.
- For proper cooling, always install the server cover before powering on the server. Operating the server without the cover properly installed might result in server component damage.

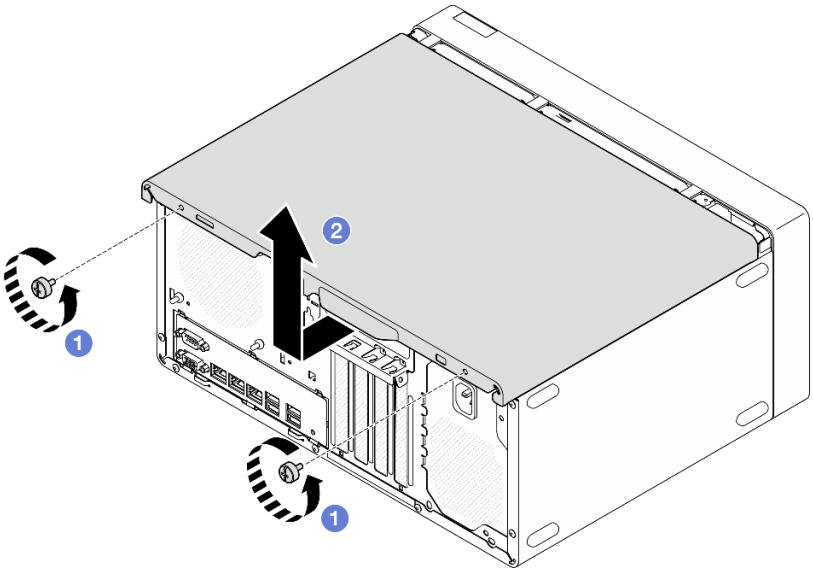

Figure 115. Server cover removal

Step 3. **(Optional)** Remove the optical drive cage first. See "Remove an optical drive cage" on page 89. Then, remove the cage bar.

a. ❶ Push the latch on the cage bar until the cage bar is disengaged from the chassis.

b. ❷ Rotate the cage bar and remove it from the chassis.

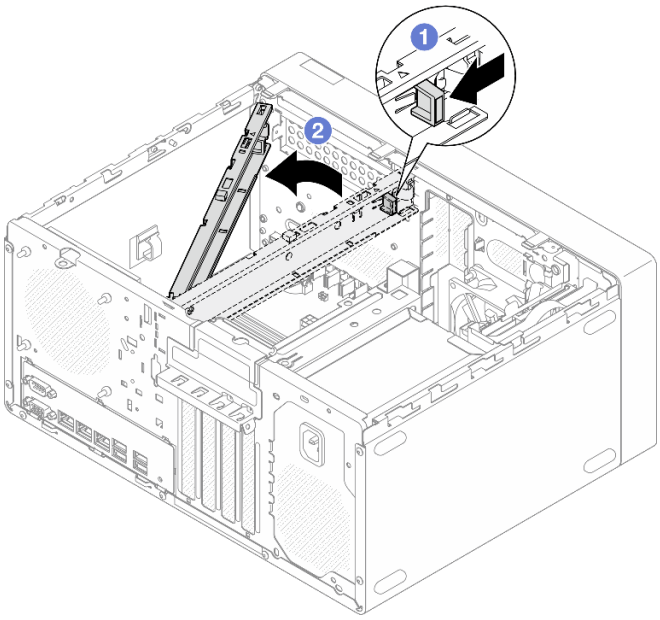

Figure 116. Removing the cage bar

After you finish

1. Install a replacement unit. See "Install the server cover" on page 157.
2. If you are instructed to return the component or optional device, follow all packaging instructions, and use any packaging materials for shipping that are supplied to you.

Demo video

Watch the procedure on YouTube

Install the server cover

Follow instructions in this section to install the server cover.

About this task

S002

CAUTION:
The power-control button on the device and the power switch on the power supply do not turn off the electrical current supplied to the device. The device also might have more than one power cord. To remove all electrical current from the device, ensure that all power cords are disconnected from the power source.

S014

CAUTION:
Hazardous voltage, current, and energy levels might be present. Only a qualified service technician is authorized to remove the covers where the label is attached.

S033

CAUTION:
Hazardous energy present. Voltages with hazardous energy might cause heating when shorted with metal, which might result in spattered metal, burns, or both.

Attention:

- Read “Installation Guidelines” on page 37 and “Safety inspection checklist” on page 38 to ensure that you work safely.
- Ensure that all adapters and other components are installed and seated correctly, and that you have not left loose tools or parts inside the server.
- Ensure that all internal cables are correctly route. See Chapter 6 “Internal cable routing” on page 161 for more information.
- If you are installing a new server cover, attach the service label to the inside of the new server cover if necessary.

Note: A new server cover comes without a service label attached. If you need a service label, order it together with the new server cover. The service label is free of charge.

Procedure

Step 1. (Optional) Install the cage bar.

a. ❶ Insert the tabs on cage bar to the slots on the rear side of the chassis.

b. ❷ Align the tabs on the other end of the cage bar to the slots on the front side of the chassis, and rotate the cage bar toward the front of the chassis until the cage bar is secured in place.

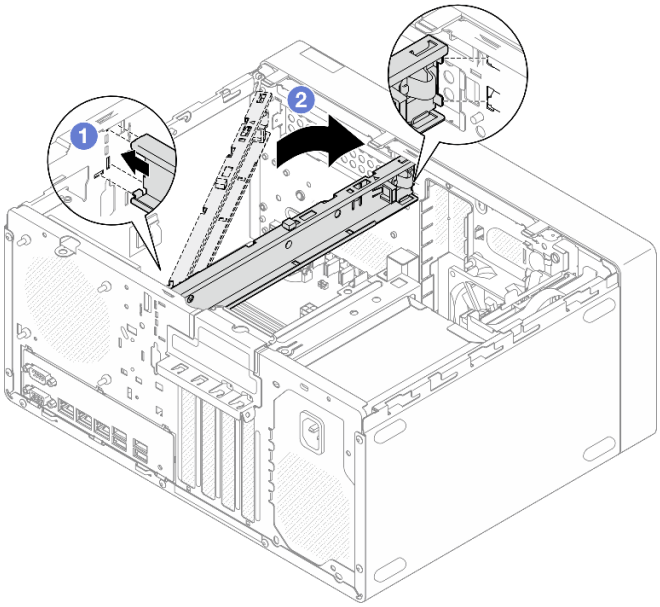

Figure 117. Installing the cage bar

Step 2. Install the server cover.

a. ❶ Align the server cover to the slots on the side of the chassis. Ensure that all the tabs on the cover align are engaged with chassis properly; then, slide the cover towards the front bezel until it snaps in place.

b. ❷ Use a screwdriver to fasten the two screws to secure the cover to the chassis.

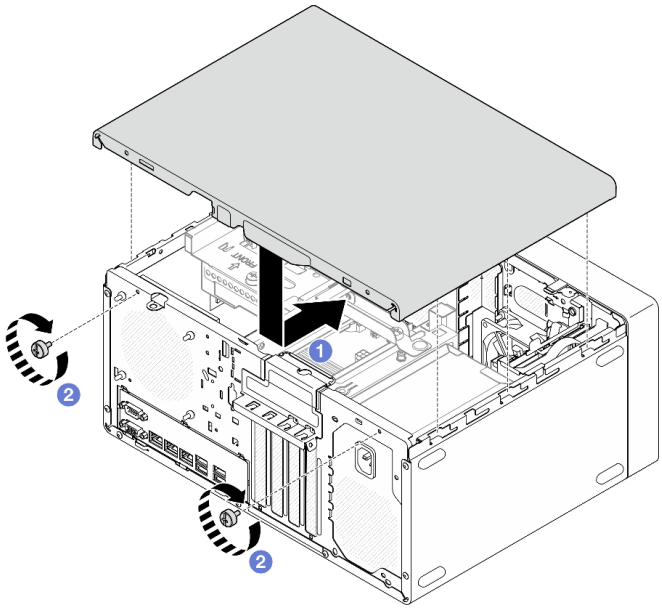

Figure 118. Installing the server cover

After you finish

Complete the parts replacement. See "Complete the parts replacement" on page 159.

Demo video

Watch the procedure on YouTube

Complete the parts replacement

Go through the checklist to complete parts replacement

To complete the parts replacement, do the following:

1. Ensure that all components have been reassembled correctly and that no tools or loose screws are left inside your server.
2. Ensure that the CMOS battery is installed on the system board. See "Install the CMOS battery (CR2032)" on page 50.
3. Properly route and secure the cables in the server. Refer to the cable connecting and routing information for each component.
4. Reinstall the server cover. See "Install the server cover" on page 157.
5. Reconnect the power cords and any cables that you removed.

   Note: To avoid component damage, connect all the other cables before connecting the power cords.
6. Power on the server and any peripheral devices. See "Power on the server" on page 42.
7. Update the server configuration.
   - Download and install the latest device drivers: http://datacentersupport.lenovo.com.
   - Update the system firmware. See "Update the firmware" on page 178.
   - Update the UEFI configuration. See https://pubs.lenovo.com/uefi-overview/.

- Reconfigure the disk arrays if you have installed or removed a hot-swap drive or a RAID adapter. See https://pubs.lenovo.com/lxpm-overview/ for the LXPM documentation compatible with your server.

Chapter 6. Internal cable routing

Some of the components in the server come with internal cables meant for specific connectors.

Cable routing guidelines

Before connecting the cables, read the following guidelines carefully:

- Turn off the server before you connect or disconnect any internal cables.
- Refer to the documentation that comes with any external devices for additional cabling instructions.
- Make use of the identifiers printed on the cables to locate the proper connectors.
- Ensure that the cable is not pinched and does not cover any connectors or obstruct any components on the system board.

Attention: Strictly observe the following instructions to avoid damaging cable sockets on the system board. Any damage to the cable sockets might require replacing the system board.

- Connect cable connectors vertically or horizontally in alignment with the orientations of the corresponding cable sockets, avoiding any tilt.
- To disconnect cables from the system board, do as follows:
  1. Press and hold all latches, release tabs, or locks on cable connectors to release the cable connectors.
  2. Remove the cable connectors vertically or horizontally in alignment with the orientations of the corresponding cable sockets, avoiding any tilt.

     Note: The cable connectors might look different from those in the illustration, but the removal procedure is the same.

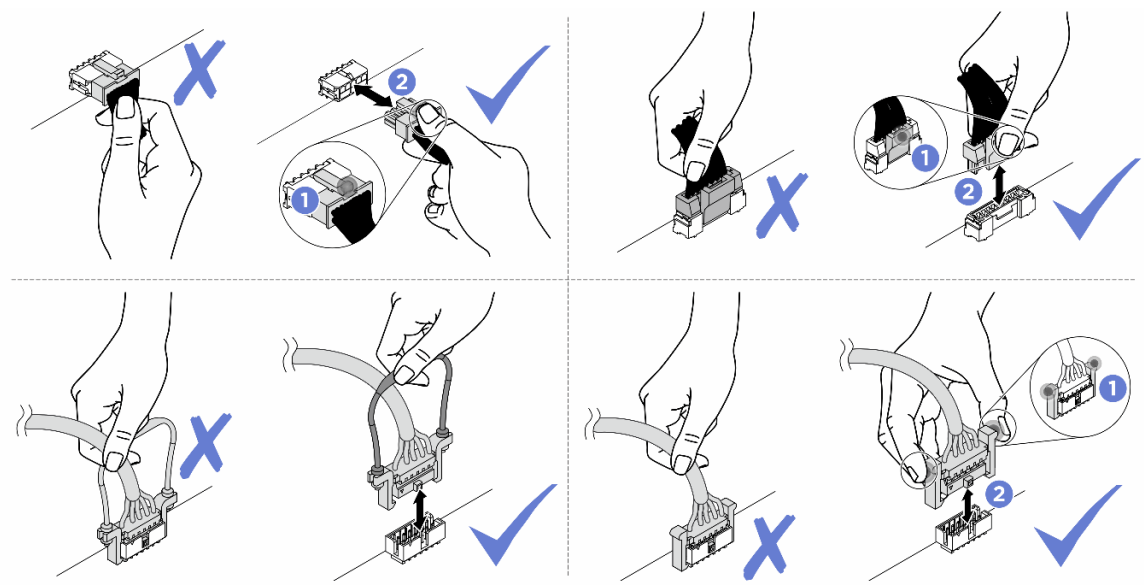

System-board connectors for cable routing

The following illustrations show the internal connectors on the system board that are used for internal cable routing.

© Copyright Lenovo 2024, 2025

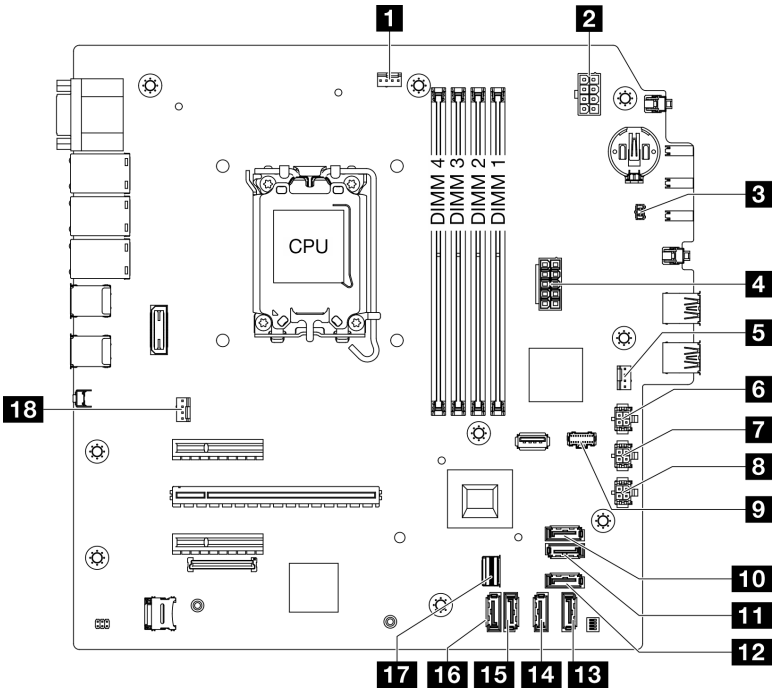

Figure 119. System-board connectors

Table 8. System-board connectors

1 Processor fan connector	**10** SATA 7 connector (M.2 kit)
2 Processor power connector	**11** SATA 6 connector (M.2 kit)
3 Intrusion switch connector	**12** SATA 4 connector (Slim ODD)
4 System power connector	**13** SATA 3 connector (Bay 3)
5 Front fan connector	**14** SATA 2 connector (Bay 2)
6 SATA power 3 connector	**15** SATA 1 connector (Bay 1)
7 SATA power 2 connector	**16** SATA 0 connector (Bay 0)
8 SATA power 1 connector	**17** M.2 Slimline connector
9 M.2 power connector	**18** Rear fan connector

Cable routing for drive bay 0 and bay 1

Follow the instructions in this section to learn how to do cable routing for the drives in bay 0 and bay 1.

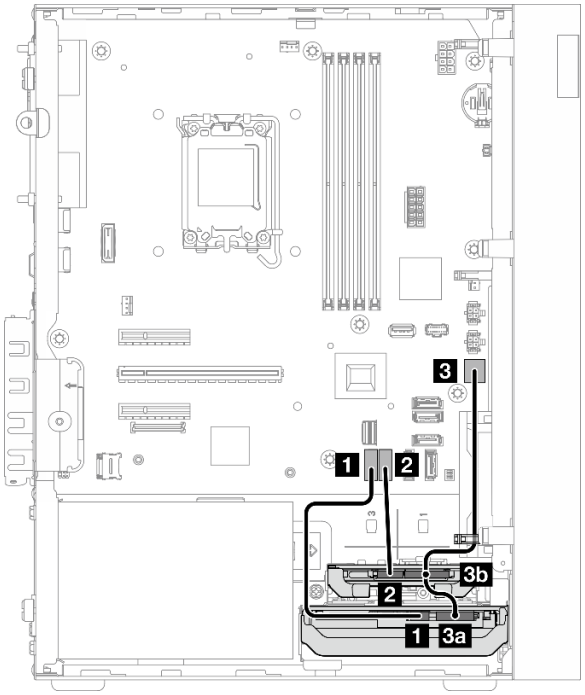

Figure 120. Cable routing for drive bay 0 and bay 1

Table 9. Cable routing for drive bay 0 and bay 1

From	To (system board)	Cable
1 Bay 0 drive signal connector	1 SATA 0 connector	7pin SATA to 7pin RA SATA cable, 185 mm
2 Bay 1 drive signal connector	2 SATA 1 connector	7pin SATA to 7pin RA SATA cable, 185 mm
3a Bay 0 drive power connector 3b Bay 1 drive power connector	3 SATA power 1 connector	4pin power cable, 300 mm/80 mm
Note: When no bay 1 drive is installed, cable connector 3b is left unused.		

For the system-board connector locations, see "System-board connectors for cable routing" on page 161.

Cable routing for drive bay 2

Follow the instructions in this section to learn how to do cable routing for the drive in bay 2.

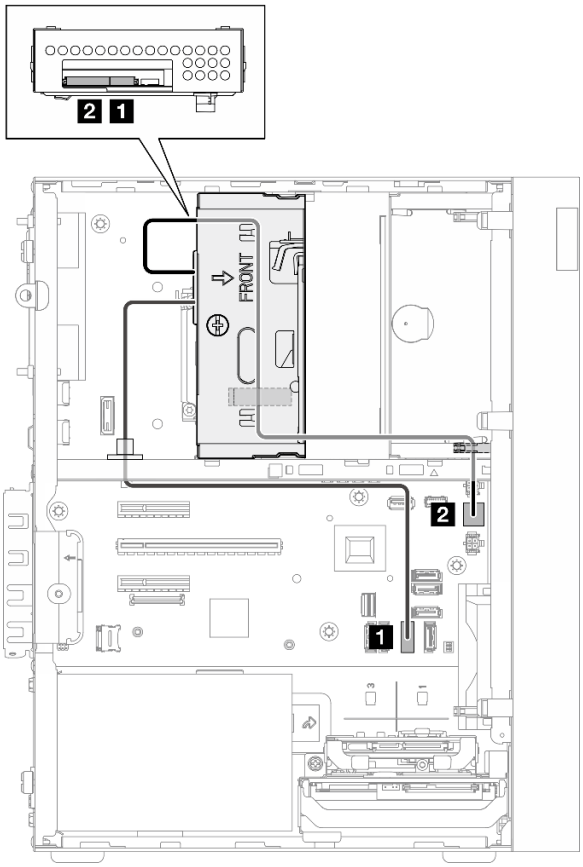

Figure 121. Cable routing for drive bay 2

Table 10. Cable routing for drive bay 2

From	To (system board)	Cable
1 Bay 2 drive signal connector	1 SATA 2 connector	7pin SATA to 7pin Slim ODD SATA, 520 mm
2 Bay 2 drive power connector	2 SATA power 2 connector	4pin power to HDD&Slim ODD, 300 mm/330 mm/120 mm

For the system-board connector locations, see "System-board connectors for cable routing" on page 161.

Cable routing for drive bay 3

Follow the instructions in this section to learn how to do cable routing for the drive in bay 3.

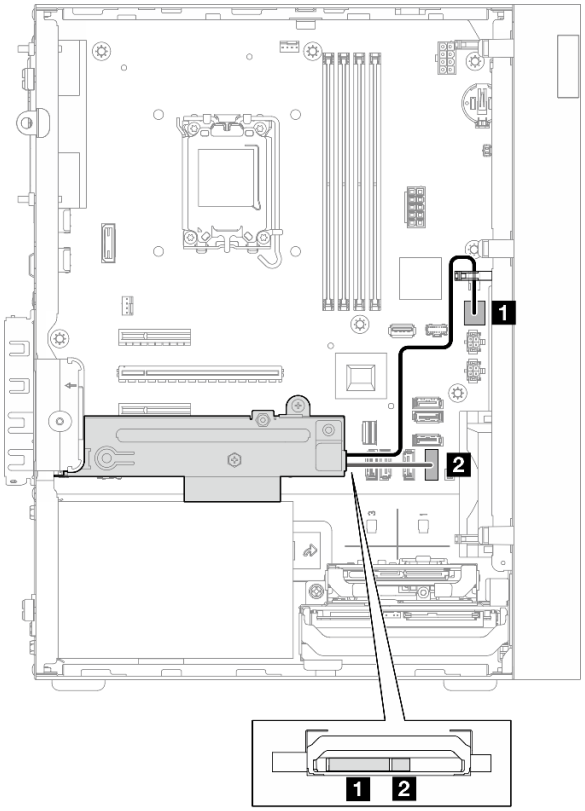

Figure 122. Cable routing for drive bay 3

Table 11. Cable routing for drive bay 3

From	To (system board)	Cable
1 Bay 3 drive power connector	1 SATA power 3 connector	4pin power cable, 380 mm
2 Bay 3 drive signal connector	2 SATA 3 connector	7pin SATA to 7pin RA SATA cable, 185 mm

For the system-board connector locations, see "System-board connectors for cable routing" on page 161.

Cable routing for optical disk drive

Follow the instructions in this section to learn how to do cable routing for the optical disk drive (ODD).

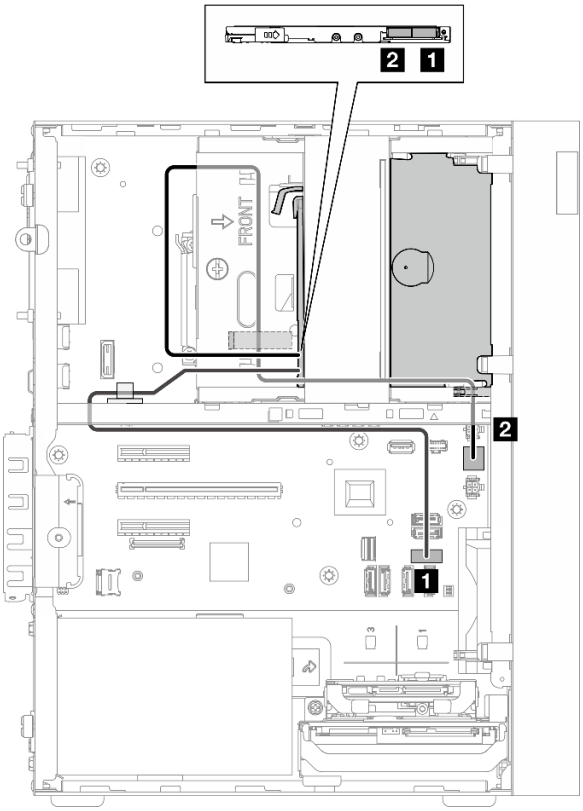

Figure 123. Cable routing for optical disk drive

Table 12. Cable routing for optical disk drive

From (ODD)	To (system board)	Cable
1 Signal connector	1 SATA 4 connector	7pin SATA to 7pin Slim ODD SATA, 520 mm
2 Power connector	2 SATA power 2 connector	4pin power to HDD&Slim ODD, 300 mm/330 mm/120 mm

For the system-board connector locations, see "System-board connectors for cable routing" on page 161.

Cable routing for the M.2 boot adapter

Follow the instructions in this section to learn how to do cable routing for the M.2 boot adapter.

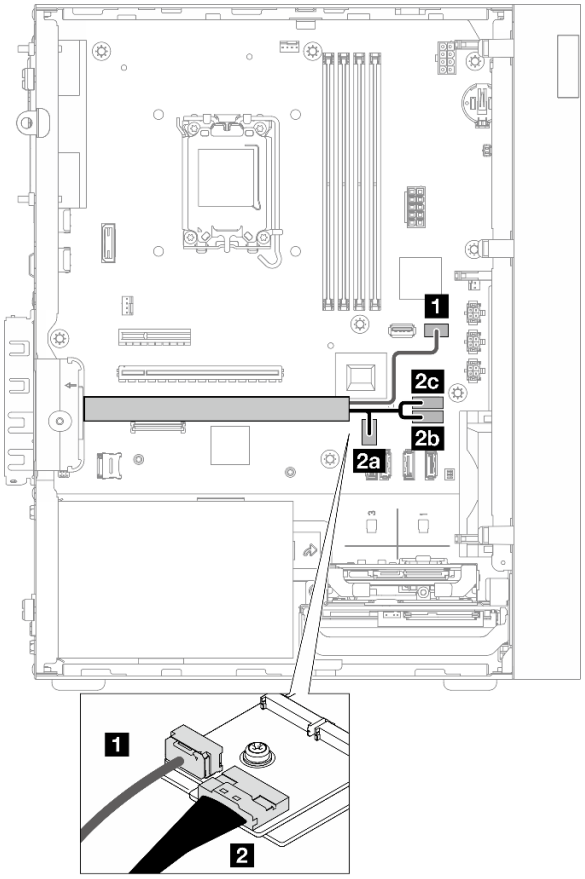

Figure 124. Cable routing for the M.2 boot adapter

Table 13. Cable routing for the M.2 boot adapter

From (M.2 boot adapter)	To (system board)	Cable
1 Power connector	1 M.2 power connector	M.2 power cable, 130 mm
2 Signal connector	2a M.2 Slimline connector 2b SATA 6 connector 2c SATA 7 connector	SLM x8- MB 2X SATA+LP SLMx4, 150mm/160mm/100mm

For the system-board connector locations, see "System-board connectors for cable routing" on page 161.

Cable routing for the RAID adapter and drives

Follow the instructions in this section to learn how to do cable routing for the RAID adapter and drives.

RAID adapter cable

The break lines indicate that part of the cable is hidden in the illustration.

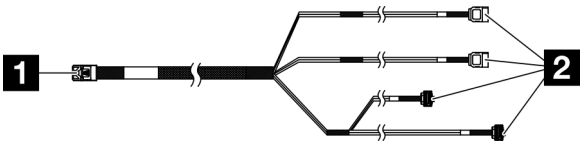

Figure 125. Cable for 5350-8i or 4350-8i

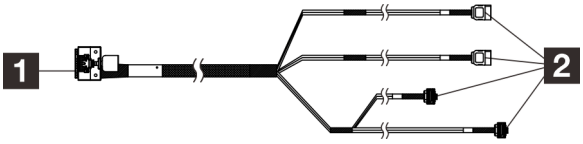

Figure 126. Cable for 545-8i

1 Connector for the RAID adapter (connector C0)	2 Connectors for the drives

Power cable routing

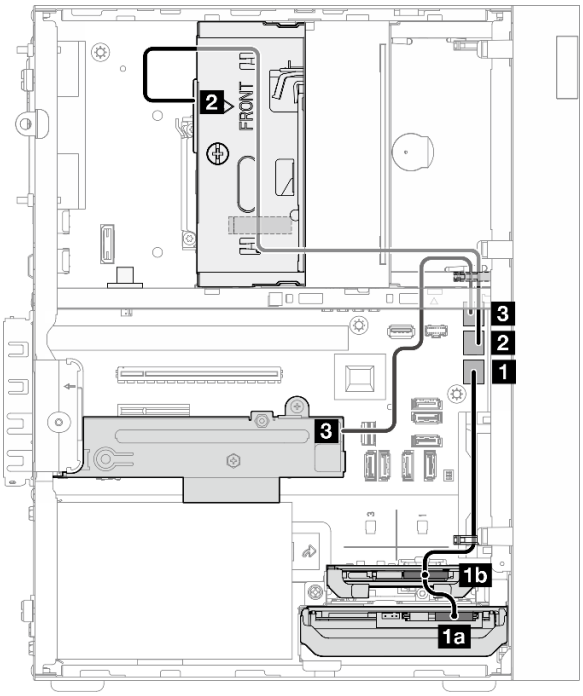

Figure 127. Power cable routing

Table 14. Power cable routing

From (drive bay 0/1/2/3)	To (system board)	Cable
1a Bay 0 drive power connector 1b Bay 1 drive power connector	1 SATA power 1 connector	4pin power cable, 300 mm/80 mm
2 Bay 2 drive power connector	2 SATA power 2 connector	4pin power to HDD&Slim ODD, 300 mm/330 mm/120 mm
3 Bay 3 drive power connector	3 SATA power 3 connector	4pin power cable, 380 mm

Signal cable routing

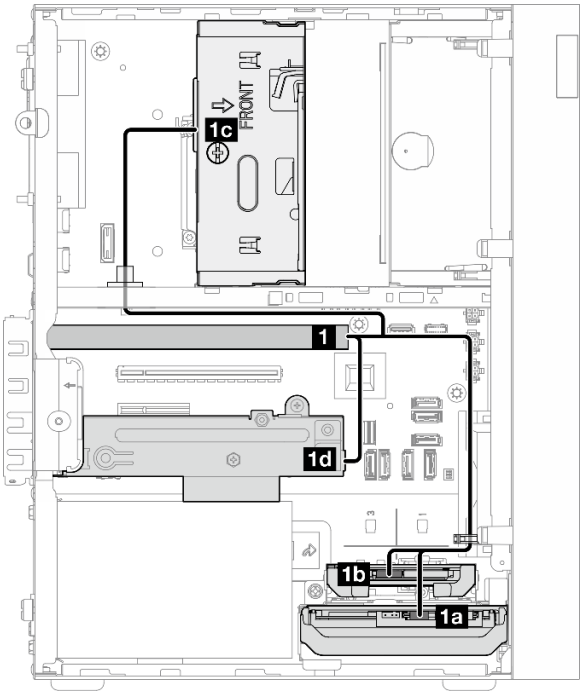

Figure 128. Signal cable routing

Table 15. Cable routing for four drives with the RAID adapter

From	To	Cable	
1 C0 connector on the RAID adapter	1a Bay 0 drive signal connector	cable labeled as “0”	• For 5350-8i or 4350-8i: Mini SAS HD X4 Vertical to VT SATA7P x2 + RA SATA 7P x2, 460 mm/ 420 mm/440 mm/440 mm • For 545-8i: SlimSASX8 to SATA7P ST*2 + SATA7P RA*2, 460 mm/ 420 mm/440 mm/440 mm
	1b Bay 1 drive signal connector	cable labeled as “1”	
	1c Bay 2 drive signal connector	cable labeled as “2”	
	1d Bay 3 drive signal connector	cable labeled as “3”	
Note: When no bay 1/2/3 drive is installed, the cable labeled as 1/2/3 is left unused.			

For the system-board connector locations, see “System-board connectors for cable routing” on page 161.

Cable routing for the power supply unit

Follow the instructions in this section to learn how to do cable routing for the power supply unit (PSU).

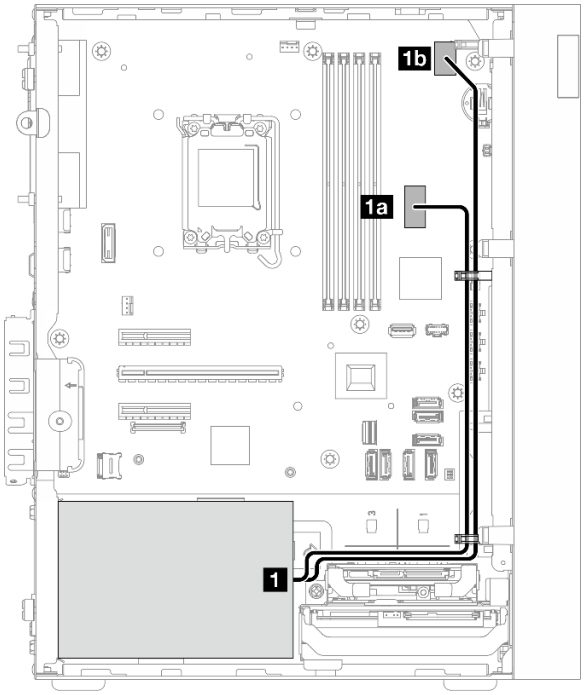

Figure 129. Cable routing for PSU

Table 16. Cable routing for PSU

From (PSU)		To (system board)
1	Micro-fit to 1X15P and 1X4P Y-splitter power cable (4-pin or 8-pin SATA connector for processor power)	1a System power connector
	Micro-fit to 1X15P and 1X4P Y-splitter power cable (15-pin connector for system power)	1b Processor power connector

For the system-board connector locations, see "System-board connectors for cable routing" on page 161.

Cable routing for the front fan and rear fan

Follow the instructions in this section to learn how to do cable routing for the front fan and rear fan.

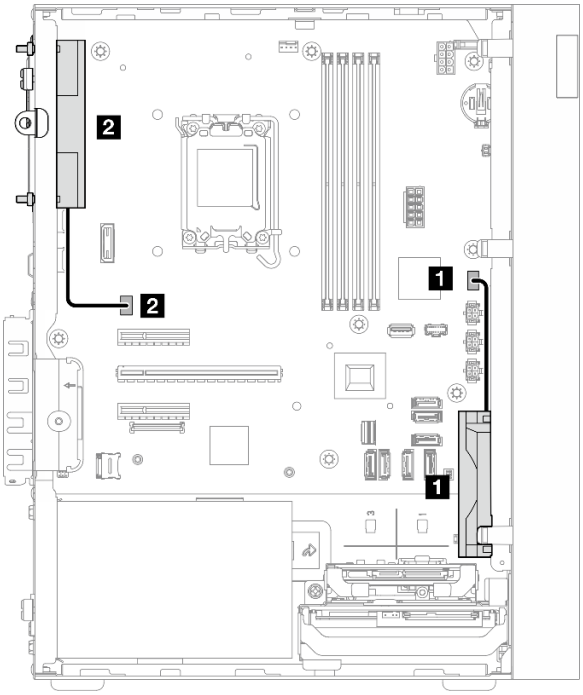

Figure 130. Cable routing for the front fan and rear fan

Table 17. Cable routing for the front fan and rear fan

From (fan)	To (system board)
1 Front fan cable	1 Front fan connector
2 Rear fan cable	2 Rear fan connector

For the system-board connector locations, see "System-board connectors for cable routing" on page 161.

Cable routing for the heat sink and fan module

Follow the instructions in this section to learn how to do cable routing for the heat sink and fan module.

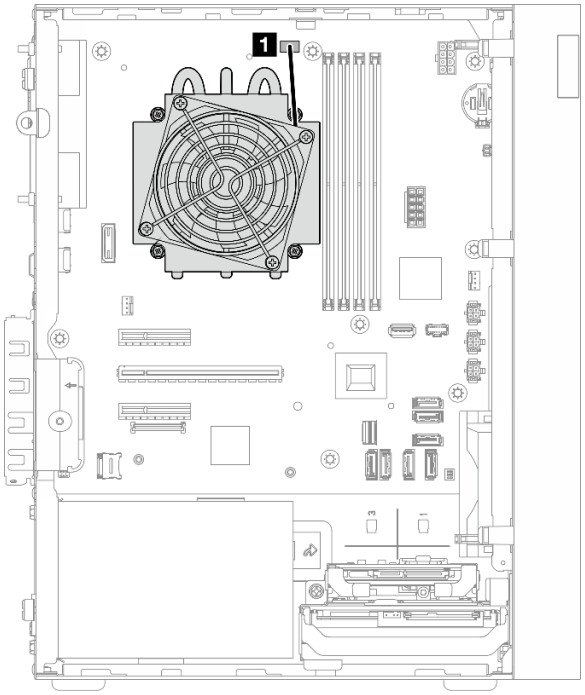

Figure 131. Cable routing for the heat sink and fan module for processor with TDP lower than 95W

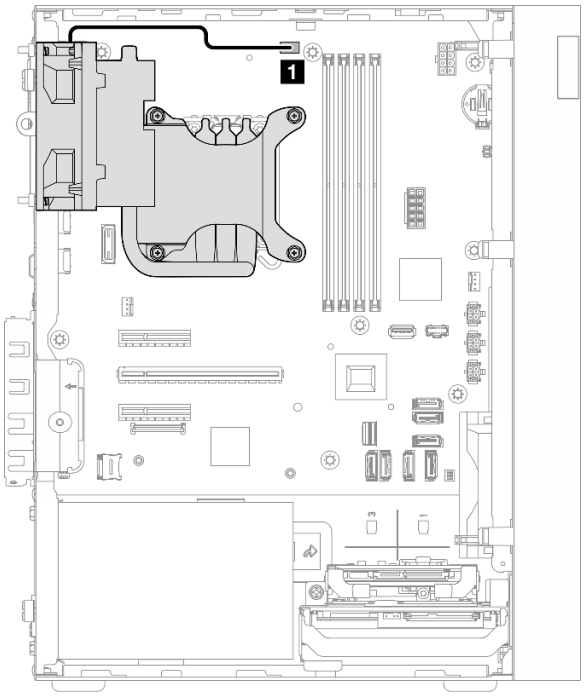

Figure 132. Cable routing for the heat sink and fan module for processor with 95W TDP

Table 18. Cable routing for the heat sink and fan module

From	To
1 Heat sink and fan module cable	Processor fan connector on the system board

For the system-board connector locations, see “System-board connectors for cable routing” on page 161.

Cable routing for the intrusion switch

Follow the instructions in this section to learn how to do cable routing for the intrusion switch.

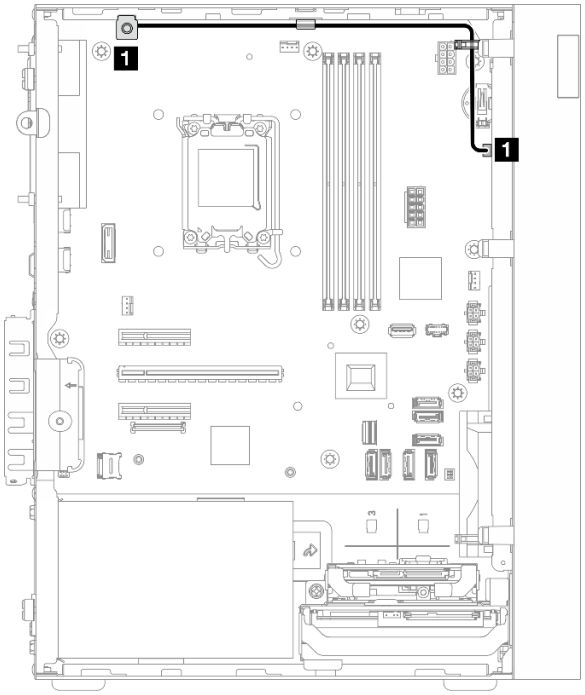

Figure 133. Cable routing for the intrusion switch

Table 19. Cable routing for the intrusion switch

From	To
1 Intrusion switch cable	1 Intrusion switch connector on the system board

For the system-board connector locations, see "System-board connectors for cable routing" on page 161.

Chapter 7. System configuration

Complete these procedures to configure your system.

Set the network connection for the Lenovo XClarity Controller

Before you can access the Lenovo XClarity Controller over your network, you need to specify how Lenovo XClarity Controller will connect to the network. Depending on how the network connection is implemented, you might need to specify a static IP address as well.

The following methods are available to set the network connection for the Lenovo XClarity Controller if you are not using DHCP:

- If a monitor is attached to the server, you can use Lenovo XClarity Provisioning Manager to set the network connection.

  Complete the following steps to connect the Lenovo XClarity Controller to the network using the Lenovo XClarity Provisioning Manager.

  1. Start the server.
  2. Press the key specified in the on-screen instructions to display the Lenovo XClarity Provisioning Manager interface. (For more information, see the “Startup” section in the LXPM documentation compatible with your server at https://pubs.lenovo.com/lxpm-overview/.)
  3. Go to **LXPM → UEFI Setup → BMC Settings** to specify how the Lenovo XClarity Controller will connect to the network.
     - If you choose a static IP connection, make sure that you specify an IPv4 or IPv6 address that is available on the network.
     - If you choose a DHCP connection, make sure that the MAC address for the server has been configured in the DHCP server.
  4. Click **OK** to apply the setting and wait for two to three minutes.
  5. Use an IPv4 or IPv6 address to connect Lenovo XClarity Controller.

     Important: The Lenovo XClarity Controller is set initially with a user name of USERID and password of PASSW0RD (with a zero, not the letter O). This default user setting has Supervisor access. It is required to change this user name and password during your initial configuration for enhanced security.

Set USB port for Lenovo XClarity Controller connection

Before you can access the Lenovo XClarity Controller through the USB port, you need to configure the USB port for Lenovo XClarity Controller connection.

Server support

To see if your server supports accessing Lenovo XClarity Controller through the USB port, check one of the following:

- Refer to Chapter 2 “Server components” on page 15.

© Copyright Lenovo 2024, 2025

- If there is a wrench icon on the USB port of your server, you can set the management USB port to connect to Lenovo XClarity Controller. It is also the only USB port that supports USB automation update of the system I/O board (or firmware and RoT security module).

Setting the USB port for Lenovo XClarity Controller connection

You can switch the USB port between normal and Lenovo XClarity Controller management operation by performing one of the following steps.

- Hold the ID button for at least 3 seconds until its LED flashes slowly (once every couple of seconds). See Chapter 2 “Server components” on page 15 for ID button location.
- From the Lenovo XClarity Controller management controller CLI, run the `usbfp` command. For information about using the Lenovo XClarity Controller CLI, see the “Command-line interface” section in the XCC documentation compatible with your server at https://pubs.lenovo.com/lxcc-overview/.
- From the Lenovo XClarity Controller management controller web interface, click **BMC Configuration → Network → USB Management Port Assignment**. For information about Lenovo XClarity Controller web interface functions, see the “Description of XClarity Controller functions on web interface” section in the XCC documentation compatible with your server at https://pubs.lenovo.com/lxcc-overview/.

Checking USB port current setting

You can also check the current setting of the USB port using the Lenovo XClarity Controller management controller CLI (`usbfp` command) or the Lenovo XClarity Controller management controller web interface (**BMC Configuration → Network → USB Management Port Assignment**). See the “Command-line interface” and “Description of XClarity Controller functions on web interface” sections in the XCC documentation compatible with your server at https://pubs.lenovo.com/lxcc-overview/.

Update the firmware

Several options are available to update the firmware for the server.

You can use the tools listed here to update the most current firmware for your server and the devices that are installed in the server.

- Best practices related to updating firmware is available at the following site:
  - https://lenovopress.lenovo.com/lp0656-lenovo-thinksystem-firmware-and-driver-update-best-practices
- The latest firmware can be found at the following site:
  - https://datacentersupport.lenovo.com/tw/en/products/servers/thinksystem/st50v3/7df3/downloads/driver-list/
- You can subscribe to product notification to stay up to date on firmware updates:
  - https://datacentersupport.lenovo.com/solutions/ht509500

Update Bundles (Service Packs)

Lenovo typically releases firmware in bundles called Update Bundles (Service Packs). To ensure that all of the firmware updates are compatible, you should update all firmware at the same time. If you are updating firmware for both the Lenovo XClarity Controller and UEFI, update the firmware for Lenovo XClarity Controller first.

Update method terminology

- **In-band update**. The installation or update is performed using a tool or application within an operating system that is executing on the server's core CPU.
- **Out-of-band update**. The installation or update is performed by the Lenovo XClarity Controller collecting the update and then directing the update to the target subsystem or device. Out-of-band updates have no dependency on an operating system executing on the core CPU. However, most out-of-band operations do require the server to be in the S0 (Working) power state.
- **On-Target update.** The installation or update is initiated from an installed operating system executing on the target server itself.
- **Off-Target update.** The installation or update is initiated from a computing device interacting directly with the server's Lenovo XClarity Controller.
- **Update Bundles (Service Packs)**. Update Bundles (Service Packs) are bundled updates designed and tested to provide the interdependent level of functionality, performance, and compatibility. Update Bundles (Service Packs) are server machine-type specific and are built (with firmware and device driver updates) to support specific Windows Server, Red Hat Enterprise Linux (RHEL) and SUSE Linux Enterprise Server (SLES) operating system distributions. Machine-type-specific firmware-only Update Bundles (Service Packs) are also available.

Firmware updating tools

See the following table to determine the best Lenovo tool to use for installing and setting up the firmware:

Tool	Update Methods Supported	Core System Firmware Updates	I/O Devices Firmware Updates	Drive Firmware Updates	Graphical user interface	Command line interface	Supports Update Bundles (Service Packs)
Lenovo XClarity Provisioning Manager (LXPM)	In-band[2] On-Target	√			√		
Lenovo XClarity Controller (XCC)	In-band[4] Out-of-band Off-Target	√	Selected I/O devices	√[3]	√		√
Lenovo XClarity Essentials OneCLI (OneCLI)	In-band Out-of-band On-Target Off-Target	√	All I/O devices	√[3]		√	√
Lenovo XClarity Essentials UpdateXpress (LXCE)	In-band Out-of-band On-Target Off-Target	√	All I/O devices		√		√

Tool	Update Methods Supported	Core System Firmware Updates	I/O Devices Firmware Updates	Drive Firmware Updates	Graphical user interface	Command line interface	Supports Update Bundles (Service Packs)
Lenovo XClarity Essentials Bootable Media Creator (BoMC)	In-band Out-of-band Off-Target	√	All I/O devices		√ (BoMC application)	√ (BoMC application)	√
Lenovo XClarity Administrator (LXCA)	In-band[1] Out-of-band[2] Off-Target	√	All I/O devices	√	√		√
Lenovo XClarity Integrator (LXCI) for VMware vCenter	Out-of-band Off-Target	√	Selected I/O devices		√		
Lenovo XClarity Integrator (LXCI) for Microsoft Windows Admin Center	In-band Out-of-band On-Target Off-Target	√	All I/O devices		√		√

Notes:

1. For I/O firmware updates.
2. For BMC and UEFI firmware updates.
3. Drive firmware update is only supported by the tools and methods below:
   - XCC Bare Metal Update (BMU): In-band, and requires system reboot.
   - Lenovo XClarity Essentials OneCLI:
     - For OneCLI version earlier than 5.0.0:
       - For drives supported by ThinkSystem V2 and V3 products (legacy drives): In-band, and does not require system reboot.
       - For drives supported only by ThinkSystem V3 products (new drives): Staging to XCC and complete the update with XCC BMU (In-band, and requires system reboot.).
     - For OneCLI 5.0.0 and later versions: In-band, and does not require system reboot.
4. Bare Metal Update (BMU) only.

- **Lenovo XClarity Provisioning Manager**

  From Lenovo XClarity Provisioning Manager, you can update the Lenovo XClarity Controller firmware, the UEFI firmware, and the Lenovo XClarity Provisioning Manager software.

  Note: By default, the Lenovo XClarity Provisioning Manager Graphical User Interface is displayed when you start the server and press the key specified in the on-screen instructions. If you have changed that default to be the text-based system setup, you can bring up the Graphical User Interface from the text-based system setup interface.

For additional information about using Lenovo XClarity Provisioning Manager to update firmware, see:

"Firmware Update" section in the LXPM documentation compatible with your server at https://pubs.lenovo.com/lxpm-overview/

- **Lenovo XClarity Controller**

  If you need to install a specific update, you can use the Lenovo XClarity Controller interface for a specific server.

  Notes:

  – To perform an in-band update through Windows or Linux, the operating system driver must be installed and the Ethernet-over-USB (sometimes called LAN over USB) interface must be enabled.

    For additional information about configuring Ethernet over USB, see:

    "Configuring Ethernet over USB" section in the XCC documentation version compatible with your server at https://pubs.lenovo.com/lxcc-overview/

  – If you update firmware through the Lenovo XClarity Controller, make sure that you have downloaded and installed the latest device drivers for the operating system that is running on the server.

  For additional information about using Lenovo XClarity Controller to update firmware, see:

  "Updating Server Firmware" section in the XCC documentation compatible with your server at https://pubs.lenovo.com/lxcc-overview/

- **Lenovo XClarity Essentials OneCLI**

  Lenovo XClarity Essentials OneCLI is a collection of command line applications that can be used to manage Lenovo servers. Its update application can be used to update firmware and device drivers for your servers. The update can be performed within the host operating system of the server (in-band) or remotely through the BMC of the server (out-of-band).

  For additional information about using Lenovo XClarity Essentials OneCLI to update firmware, see:

  https://pubs.lenovo.com/lxce-onecli/onecli_c_update

- **Lenovo XClarity Essentials UpdateXpress**

  Lenovo XClarity Essentials UpdateXpress provides most of OneCLI update functions through a graphical user interface (GUI). It can be used to acquire and deploy Update Bundles (Service Packs) update packages and individual updates. Update Bundles (Service Packs) contain firmware and device driver updates for Microsoft Windows and for Linux.

  You can obtain Lenovo XClarity Essentials UpdateXpress from the following location:

  https://datacentersupport.lenovo.com/solutions/lnvo-xpress

- **Lenovo XClarity Essentials Bootable Media Creator**

  You can use Lenovo XClarity Essentials Bootable Media Creator to create bootable media that is suitable for firmware updates, VPD updates, inventory and FFDC collection, advanced system configuration, FoD Keys management, secure erase, RAID configuration, and diagnostics on supported servers.

  You can obtain Lenovo XClarity Essentials BoMC from the following location:

  https://datacentersupport.lenovo.com/solutions/lnvo-bomc

- **Lenovo XClarity Administrator**

  If you are managing multiple servers using the Lenovo XClarity Administrator, you can update firmware for all managed servers through that interface. Firmware management is simplified by assigning firmware-compliance policies to managed endpoints. When you create and assign a compliance policy to managed

endpoints, Lenovo XClarity Administrator monitors changes to the inventory for those endpoints and flags any endpoints that are out of compliance.

For additional information about using Lenovo XClarity Administrator to update firmware, see:

https://pubs.lenovo.com/lxca/update_fw

- **Lenovo XClarity Integrator offerings**

  Lenovo XClarity Integrator offerings can integrate management features of Lenovo XClarity Administrator and your server with software used in a certain deployment infrastructure, such as VMware vCenter, Microsoft Admin Center, or Microsoft System Center.

  For additional information about using Lenovo XClarity Integrator to update firmware, see:

  https://pubs.lenovo.com/lxci-overview/

Configure the firmware

Several options are available to install and set up the firmware for the server.

Note: UEFI **Legacy Mode** is not supported by ThinkSystem V4 products.

- **Lenovo XClarity Provisioning Manager (LXPM)**

  From Lenovo XClarity Provisioning Manager, you can configure the UEFI settings for your server.

  Notes: The Lenovo XClarity Provisioning Manager provides a Graphical User Interface to configure a server. The text-based interface to system configuration (the Setup Utility) is also available. From Lenovo XClarity Provisioning Manager, you can choose to restart the server and access the text-based interface. In addition, you can choose to make the text-based interface the default interface that is displayed when you start LXPM. To do this, go to **Lenovo XClarity Provisioning Manager → UEFI Setup → System Settings → <F1>Start Control → Text Setup**. To start the server with Graphic User Interface, select **Auto** or **Tool Suite**.

  See the following documentations for more information:

  - Search for the LXPM documentation version compatible with your server at https://pubs.lenovo.com/lxpm-overview/
  - *UEFI User Guide* at https://pubs.lenovo.com/uefi-overview/

- **Lenovo XClarity Essentials OneCLI**

  You can use the config application and commands to view the current system configuration settings and make changes to Lenovo XClarity Controller and UEFI. The saved configuration information can be used to replicate or restore other systems.

  For information about configuring the server using Lenovo XClarity Essentials OneCLI, see:

  https://pubs.lenovo.com/lxce-onecli/onecli_c_settings_info_commands

- **Lenovo XClarity Administrator**

  You can quickly provision and pre-provision all of your servers using a consistent configuration. Configuration settings (such as local storage, I/O adapters, boot settings, firmware, ports, and Lenovo XClarity Controller and UEFI settings) are saved as a server pattern that can be applied to one or more managed servers. When the server patterns are updated, the changes are automatically deployed to the applied servers.

  Specific details about configuring the server using Lenovo XClarity Administrator are available at:

https://pubs.lenovo.com/lxca/server_configuring

- **Lenovo XClarity Controller**

  You can configure the management processor for the server through the Lenovo XClarity Controller Web interface, the command-line interface, or Redfish API.

  For information about configuring the server using Lenovo XClarity Controller, see:

  "Configuring the Server" section in the XCC documentation compatible with your server at https://pubs.lenovo.com/lxcc-overview/

Memory module configuration

Memory performance depends on several variables, such as memory mode, memory speed, memory ranks, memory population and processor.

Information about optimizing memory performance and configuring memory is available at the Lenovo Press website:

https://lenovopress.lenovo.com/servers/options/memory

In addition, you can take advantage of a memory configurator, which is available at the following site:

https://dcsc.lenovo.com/#/memory_configuration

RAID configuration

Using a Redundant Array of Independent Disks (RAID) to store data remains one of the most common and cost-efficient methods to increase server's storage performance, availability, and capacity.

RAID increases performance by allowing multiple drives to process I/O requests simultaneously. RAID can also prevent data loss in case of a drive failure by reconstructing (or rebuilding) the missing data from the failed drive using the data from the remaining drives.

RAID array (also known as RAID drive group) is a group of multiple physical drives that uses a certain common method to distribute data across the drives. A virtual drive (also known as virtual disk or logical drive) is a partition in the drive group that is made up of contiguous data segments on the drives. Virtual drive is presented up to the host operating system as a physical disk that can be partitioned to create OS logical drives or volumes.

An introduction to RAID is available at the following Lenovo Press website:

https://lenovopress.lenovo.com/lp0578-lenovo-raid-introduction

Detailed information about RAID management tools and resources is available at the following Lenovo Press website:

https://lenovopress.lenovo.com/lp0579-lenovo-raid-management-tools-and-resources

Intel VROC

Enabling Intel VROC

Before setting up RAID for NVMe drives, follow the below steps to enable VROC:

1. Restart the system. Before the operating system starts up, press the key specified in the on-screen instructions to enter the Setup Utility. (For more information, see the “Startup” section in the LXPM documentation compatible with your server at https://pubs.lenovo.com/lxpm-overview/.)
2. Go to **System settings → Devices and I/O Ports → Onboard SATA Mode → RAID** and enable the option.
3. Save the changes and reboot the system.

Intel VROC configurations

Intel offers various VROC configurations with different RAID level and SSD support. See the following for more details.

Notes:
- Supported RAID levels varies by model. For the RAID level supported by ST50 V3, see “Technical specifications” on page 3.
- For more information about acquiring and installing the activation key, see https://fod.lenovo.com/lkms.

Intel VROC configurations for SATA SSDs	Requirements
Intel VROC SATA RAID	• Supports RAID levels 0, 1, and 5.

Deploy the operating system

Several options are available to deploy an operating system on the server.

Available operating systems

- Microsoft Windows Server
- VMware ESXi
- Red Hat Enterprise Linux
- SUSE Linux Enterprise Server

Complete list of available operating systems: https://lenovopress.lenovo.com/osig.

Tool-based deployment

- **Multi-server**

  Available tools:

  – Lenovo XClarity Administrator

  https://pubs.lenovo.com/lxca/compute_node_image_deployment
- **Single-server**

  Available tools:

  – Lenovo XClarity Provisioning Manager

  “OS Installation” section in the LXPM documentation compatible with your server at https://pubs.lenovo.com/lxpm-overview/

Manual deployment

If you cannot access the above tools, follow the instructions below, download the corresponding *OS Installation Guide*, and deploy the operating system manually by referring to the guide.

1. Go to https://datacentersupport.lenovo.com/solutions/server-os.
2. Select an operating system from the navigation pane and click **Resources**.
3. Locate the “OS Install Guides” area and click the installation instructions. Then, follow the instructions to complete the operation system deployment task.

Back up the server configuration

After setting up the server or making changes to the configuration, it is a good practice to make a complete backup of the server configuration.

Make sure that you create backups for the following server components:

- **Management processor**

  You can back up the management processor configuration through the Lenovo XClarity Controller interface. For details about backing up the management processor configuration, see:

  “Backing up the BMC configuration” section in the XCC documentation compatible with your server at https://pubs.lenovo.com/lxcc-overview/.

  Alternatively, you can use the `backup` command from Lenovo XClarity Essentials OneCLI to create a backup of all configuration settings. For more information about the `backup` command, see:

  https://pubs.lenovo.com/lxce-onecli/config_backup

- **Operating system**

  Use your backup methods to back up the operating system and user data for the server.

Chapter 8. Problem determination

Use the information in this section to isolate and resolve issues that you might encounter while using your server.

Lenovo servers can be configured to automatically notify Lenovo Support if certain events are generated. You can configure automatic notification, also known as Call Home, from management applications, such as the Lenovo XClarity Administrator. If you configure automatic problem notification, Lenovo Support is automatically alerted whenever a server encounters a potentially significant event.

To isolate a problem, you should typically begin with the event log of the application that is managing the server:

- If you are managing the server from the Lenovo XClarity Administrator, begin with the Lenovo XClarity Administrator event log.
- If you are using some other management application, begin with the Lenovo XClarity Controller event log.

Web resources

- **Tech tips**

  Lenovo continually updates the support website with the latest tips and techniques that you can use to solve issues that your server might encounter. These Tech Tips (also called retain tips or service bulletins) provide procedures to work around issues or solve problems related to the operation of your server.

  To find the Tech Tips available for your server:

  1. Go to http://datacentersupport.lenovo.com and navigate to the support page for your server.
  2. Click on **How To's** from the navigation pane.
  3. Click **Article Type → Solution** from the drop-down menu.

     Follow the on-screen instructions to choose the category for the problem that you are having.
- **Lenovo Data Center Forum**
  - Check https://forums.lenovo.com/t5/Datacenter-Systems/ct-p/sv_eg to see if someone else has encountered a similar problem.

Event logs

An *alert* is a message or other indication that signals an event or an impending event. Alerts are generated by the Lenovo XClarity Controller or by UEFI in the servers. These alerts are stored in the Lenovo XClarity Controller Event Log. If the server is managed by the Chassis Management Module 2 or by the Lenovo XClarity Administrator, alerts are automatically forwarded to those management applications.

Note: For a listing of events, including user actions that might need to be performed to recover from an event, see the *Messages and Codes Reference*, which is available at https://pubs.lenovo.com/st50-v3/pdf_files.html.

Lenovo XClarity Administrator event log

If you are using Lenovo XClarity Administrator to manage server, network, and storage hardware, you can view the events from all managed devices through the XClarity Administrator.

© Copyright Lenovo 2024, 2025

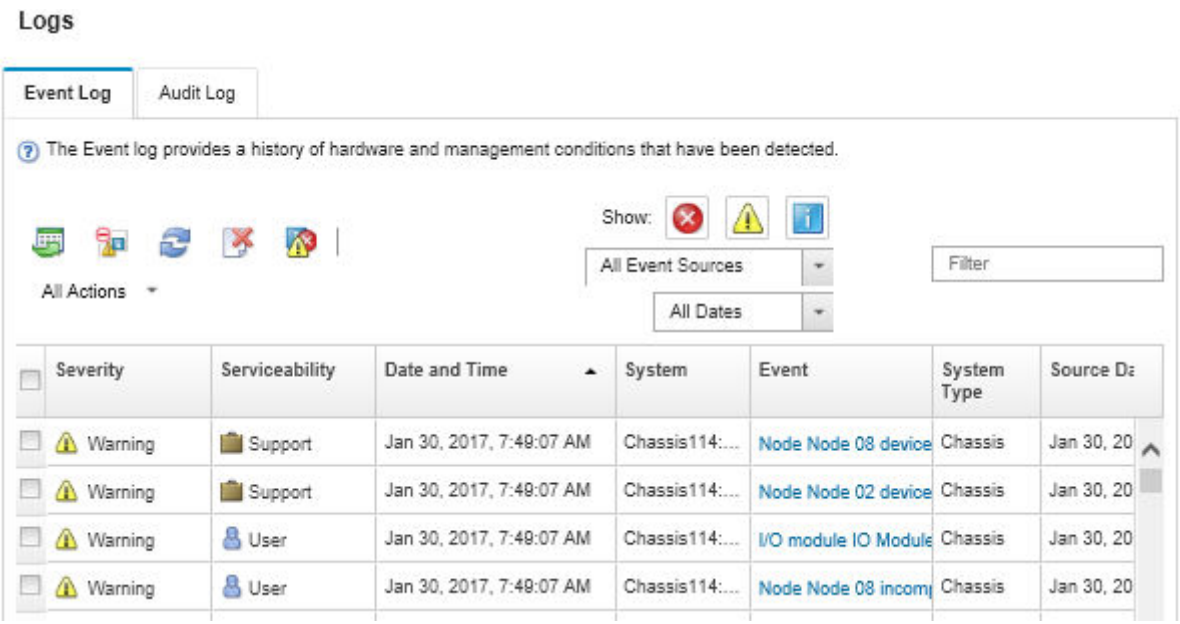

Figure 134. Lenovo XClarity Administrator event log

For more information about working with events from XClarity Administrator, see:

https://pubs.lenovo.com/lxca/events_vieweventlog

Lenovo XClarity Controller event log

The Lenovo XClarity Controller monitors the physical state of the server and its components using sensors that measure internal physical variables such as temperature, power-supply voltages, fan speeds, and component status. The Lenovo XClarity Controller provides various interfaces to systems management software and to system administrators and users to enable remote management and control of a server.

The Lenovo XClarity Controller monitors all components of the server and posts events in the Lenovo XClarity Controller event log.

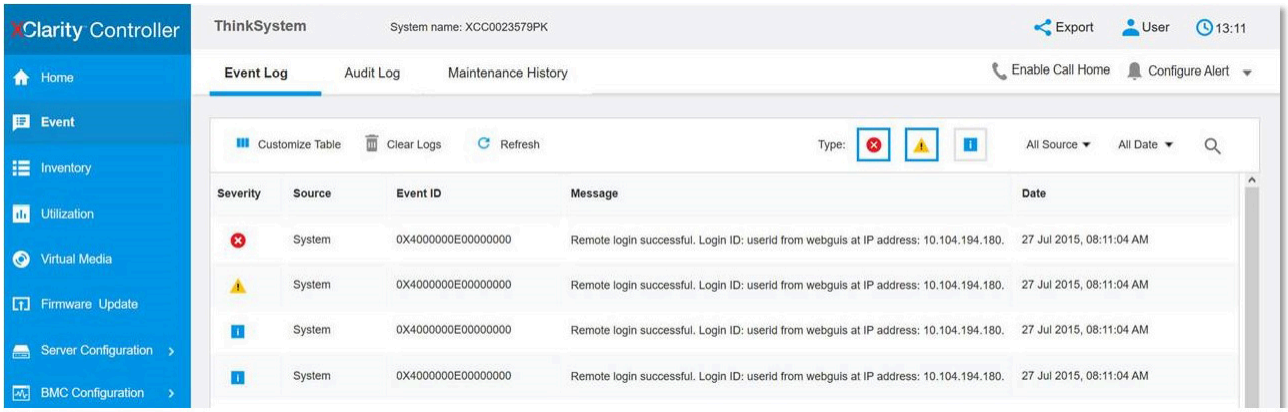

Figure 135. Lenovo XClarity Controller event log

For more information about accessing the Lenovo XClarity Controller event log, see:

“Viewing Event Logs” section in the XCC documentation compatible with your server at https://pubs.lenovo.com/lxcc-overview/

Troubleshooting by LEDs

See the following section for information on available LEDs.

Firmware and RoT security module LEDs

This topic provides information on LEDs of the ThinkSystem V3 Firmware and Root of Trust Security Module (firmware and RoT security module)

The following table describes the problems that are indicated by LEDs on the firmware and RoT security module.

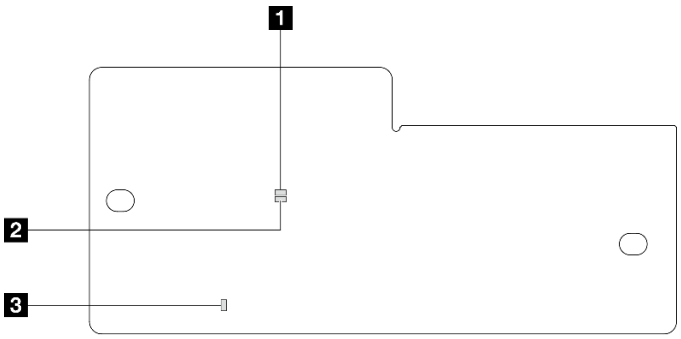

Figure 136. Firmware and RoT security module LEDs

1 AP0 LED (Green)	2 AP1 LED (Green)	3 Fatal Error LED (Amber)

Table 20. LEDs description

Scenario	AP0 LED	AP1 LED	Fatal Error LED	FPGA heart-beat LED[note]	XCC heart-beat LED[note]	Actions
RoT security module fatal firmware failure	Off	Off	On	N/A	N/A	Replace the firmware and RoT security module.
	Blink	N/A	On	N/A	N/A	Replace the firmware and RoT security module.
	Blink	N/A	On	On	N/A	Replace the firmware and RoT security module.
No system power (FPGA heartbeat LED off)	Off	Off	Off	Off	Off	If the AC power is on, but the system board does not have power, then: 1. Check the power supply unit (PSU) or power distribution board (PDB) if any. If the PSU or PDB has any error, replace it. 2. If the PSU or PDB is good, replace the system board.

Table 20. LEDs description (continued)

Scenario	AP0 LED	AP1 LED	Fatal Error LED	FPGA heart-beat LED[note]	XCC heart-beat LED[note]	Actions
XCC firmware recoverable error	Blink	N/A	Off	N/A	N/A	Information only. No action is required.
XCC firmware is recovered from error	Blink	N/A	Off	N/A	N/A	Information only. No action is required.
UEFI firmware authentication failure	N/A	Blink	Off	N/A	N/A	Information only. No action is required.
UEFI firmware is recovered from authentication failure	N/A	On	Off	N/A	N/A	Information only. No action is required.
System is OK (FPGA heartbeat LED is On)	On	On	Off	On	On	Information only. No action is required.

System-board LEDs

The following illustrations show the light-emitting diodes (LEDs) on the system board.

Press the power button to light the LEDs on the system board when the power source has been removed from the server.

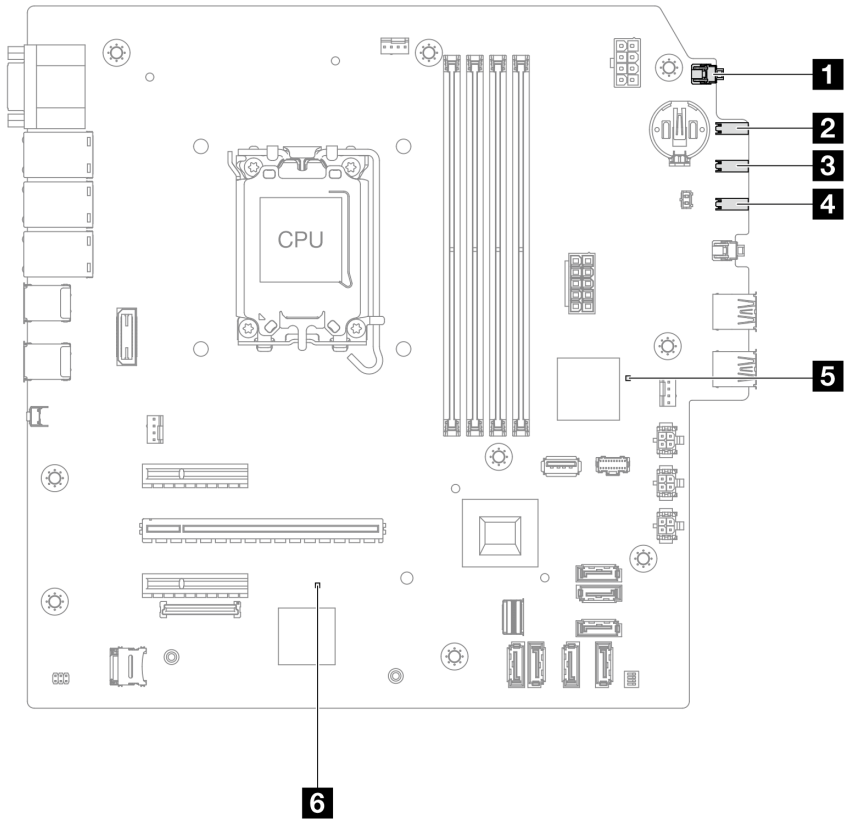

Figure 137. System-board LEDs

Table 21. System-board-assembly LEDs

LED	Description	Action
1 System power LED (green)	The system power LED helps you determine the system power status.	The states of the system power LED are as follows: • Off: No power supply is properly installed, or the LED itself has failed. • Flashing rapidly (four times per second): The server is turned off and is not ready to be turned on. The power button is disabled. This will last approximately 5 to 10 seconds. • Flashing slowly (once per second): The server is turned off and is ready to be turned on. Press the power button to turn on the server. • On: The server is turned on.
2 Drive activity LED (green)	This LED indicates the activity of the drives. • Blinking: The drives are active. • Off: The drives are not active.	N/A

Table 21. System-board-assembly LEDs (continued)

LED	Description	Action
3 Network activity LED (green)	The network activity LED helps you identify the network connectivity and activity. • Blinking: The network is connected and active. • Off: The server is disconnected from the network.	N/A
4 System error LED (yellow)	The system error LED helps you determine if there are any system errors. • On: An error has been detected on the server. • Off: The server is off or the server is on and is working correctly.	Check system logs or internal error LEDs to identify the failed part. For more information, see "System error LED" on page 16.

Table 21. System-board-assembly LEDs (continued)

LED	Description	Action
5 FPGA heartbeat LED	The FPGA heartbeat LED helps you identify the FPGA status. • Blinking (about one flash per second): FPGA is working normally. • On or off: FPGA is not working.	If the FPGA heartbeat LED is always off or always on, do the following: 1. Replace the system board. 2. If the problem remains, contact Lenovo Support.
6 XCC heartbeat LED (green)	The XCC heartbeat LED helps you identify the XCC status. • Blinking (about one flash per second) : XCC is working normally. • Blinking at other speeds or always on: XCC is at the initial phase or is working abnormally. • Off: XCC is not working.	• If the XCC heartbeat LED is always off or always on, do the following: – If XCC cannot be accessed: 1. Re-plug the power cord. 2. Check and ensure that the system board and the firmware and RoT security module are installed correctly. (Trained technician only) Reinstall them if needed. 3. (Trained technician only) Replace the firmware and RoT security module. 4. (Trained technician only) Replace the system board. – If XCC can be accessed, replace the system board. • If the XCC heartbeat LED is always blinking fast over 5 minutes, do the following: 1. Re-plug the power cord. 2. Check and ensure that the system board and the firmware and RoT security module are installed correctly. (Trained technician only) Reinstall them if needed. 3. (Trained technician only) Replace the firmware and RoT security module. 4. (Trained technician only) Replace the system board. • If the XCC heartbeat LED is always blinking slow over 5 minutes, do the following: 1. Re-plug the power cord. 2. Check and ensure that the system board and the firmware and RoT security module are installed correctly. (Trained technician only) Reinstall them if needed. 3. If the problem remains, contact Lenovo Support.

XCC system management port (10/100/1000 Mbps RJ-45) LEDs

This topic provides information on LEDs of XCC system management port (10/100/1000 Mbps RJ-45).

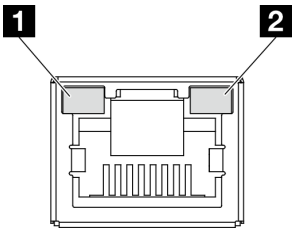

Figure 138. XCC system management port (10/100/1000 Mbps RJ-45) LEDs

LED	Description
1 XCC system management port (10/100/1000 Mbps RJ-45) link LED	Use this green LED to distinguish the network connectivity status: • Off: The network link is disconnected. • Green: The network link is established.
2 XCC system management port (10/100/1000 Mbps RJ-45) activity LED	Use this green LED to distinguish the network activity status: • Off: No data is being transmitted. • Blink: Data is being transmitted.

General problem determination procedures

Use the information in this section to resolve problems if the event log does not contain specific errors or the server is inoperative.

If you are not sure about the cause of a problem and the power supplies are working correctly, complete the following steps to attempt to resolve the problem:

1. Power off the server.
2. Make sure that the server is cabled correctly.
3. Remove or disconnect the following devices if applicable, one at a time, until you find the failure. Power on and configure the server each time you remove or disconnect a device.
   - Any external devices.
   - Surge-suppressor device (on the server).
   - Printer, mouse, and non-Lenovo devices.
   - Each adapter.
   - Hard disk drives.
   - Memory modules until you reach the minimal configuration for debugging that is supported for the server.

     To determine the minimal configuration for your server, see “Minimal configuration for debugging” in “Technical specifications” on page 3.
4. Power on the server.

If the problem is solved when you remove an adapter from the server, but the problem recurs when you install the same adapter again, suspect the adapter. If the problem recurs when you replace the adapter with a different one, try a different PCIe slot.

If the problem appears to be a networking problem and the server passes all system tests, suspect a network cabling problem that is external to the server.

Resolving suspected power problems

Power problems can be difficult to solve. For example, a short circuit can exist anywhere on any of the power distribution buses. Usually, a short circuit will cause the power subsystem to shut down because of an overcurrent condition.

Complete the following steps to diagnose and resolve a suspected power problem.

Step 1. Check the event log and resolve any errors related to the power.

Note: Start with the event log of the application that is managing the server. For more information about event logs, see "Event logs" on page 187.

Step 2. Check for short circuits, for example, if a loose screw is causing a short circuit on a circuit board.

Step 3. Remove the adapters and disconnect the cables and power cords to all internal and external devices until the server is at the minimal configuration for debugging that is required for the server to start. To determine the minimal configuration for your server, see "Minimal configuration for debugging" in "Technical specifications" on page 3.

Step 4. Reconnect all AC power cords and turn on the server. If the server starts successfully, reseat the adapters and devices one at a time until the problem is isolated.

If the server does not start from the minimal configuration, replace the components in the minimal configuration one at a time until the problem is isolated.

Resolving suspected Ethernet controller problems

The method that you use to test the Ethernet controller depends on which operating system you are using. See the operating-system documentation for information about Ethernet controllers, and see the Ethernet controller device-driver readme file.

Complete the following steps to attempt to resolve suspected problems with the Ethernet controller.

Step 1. Make sure that the correct device drivers, which come with the server are installed and that they are at the latest level.

Step 2. Make sure that the Ethernet cable is installed correctly.

- The cable must be securely attached at all connections. If the cable is attached but the problem remains, try a different cable.
- If you set the Ethernet controller to operate at 100 Mbps or 1000 Mbps, you must use Category 5 cabling.

Step 3. Determine whether the hub supports auto-negotiation. If it does not, try configuring the integrated Ethernet controller manually to match the speed and duplex mode of the hub.

Step 4. Check the Ethernet controller LEDs on the server. These LEDs indicate whether there is a problem with the connector, cable, or hub.

Ethernet controller LED locations are specified in "Troubleshooting by LEDs" on page 189.

- The Ethernet link status LED is lit when the Ethernet controller receives a link pulse from the hub. If the LED is off, there might be a defective connector or cable or a problem with the hub.
- The Ethernet transmit/receive activity LED is lit when the Ethernet controller sends or receives data over the Ethernet network. If the Ethernet transmit/receive activity is off, make sure that the hub and network are operating and that the correct device drivers are installed.

Step 5. Check the Network activity LED on the server. The Network activity LED is lit when data is active on the Ethernet network. If the Network activity LED is off, make sure that the hub and network are operating and that the correct device drivers are installed.

Network activity LED location is specified in “Troubleshooting by LEDs” on page 189.

Step 6. Check for operating-system-specific causes of the problem, and also make sure that the operating system drivers are installed correctly.

Step 7. Make sure that the device drivers on the client and server are using the same protocol.

If the Ethernet controller still cannot connect to the network but the hardware appears to be working, the network administrator must investigate other possible causes of the error.

Troubleshooting by symptom

Use this information to find solutions to problems that have identifiable symptoms.

To use the symptom-based troubleshooting information in this section, complete the following steps:

1. Check the event log of the application that is managing the server and follow the suggested actions to resolve any event codes.
   - If you are managing the server from the Lenovo XClarity Administrator, begin with the Lenovo XClarity Administrator event log.
   - If you are using some other management application, begin with the Lenovo XClarity Controller event log.

   For more information about event logs (see “Event logs” on page 187).
2. Review this section to find the symptoms that you are experiencing and follow the suggested actions to resolve the issue.
3. If the problem persists, contact support (see “Contacting Support” on page 217).

Intermittent problems

Use this information to solve intermittent problems.

- “Intermittent external device problems” on page 196
- “Intermittent KVM problems” on page 196
- “Intermittent unexpected reboots” on page 197

Intermittent external device problems

Complete the following steps until the problem is solved.

1. Update the UEFI and XCC firmware to the latest versions.
2. Make sure that the correct device drivers are installed. See the manufacturer's website for documentation.
3. For a USB device:
   a. Make sure that the device is configured correctly.

      Restart the server and press the key according to the on-screen instructions to display the LXPM system setup interface. (For more information, see the “Startup” section in the LXPM documentation compatible with your server at https://pubs.lenovo.com/lxpm-overview/.) Then, click **System Settings → Devices and I/O Ports → USB Configuration**.

   b. Connect the device to another port. If using a USB hub, remove the hub and connect the device directly to the server. Make sure that the device is configured correctly for the port.

Intermittent KVM problems

Complete the following steps until the problem is solved.

Video problems:

1. Make sure that all cables and the console breakout cable are properly connected and secure.
2. Make sure that the monitor is working properly by testing it on another server.
3. Test the console breakout cable on a working server to ensure that it is operating properly. Replace the console breakout cable if it is defective.

Keyboard problems:

Make sure that all cables and the console breakout cable are properly connected and secure.

Mouse problems:

Make sure that all cables and the console breakout cable are properly connected and secure.

Intermittent unexpected reboots

Note: Some uncorrectable errors require that the server reboot so that it can disable a device, such as a memory DIMM or a processor to allow the machine to boot up properly.

1. If the reset occurs during POST and the POST watchdog timer is enabled, make sure that sufficient time is allowed in the watchdog timeout value (POST Watchdog Timer).

   To check the POST watchdog time, restart the server and press the key according to the on-screen instructions to display the LXPM system setup interface. (For more information, see the "Startup" section in the LXPM documentation compatible with your server at https://pubs.lenovo.com/lxpm-overview/.) Then, click **BMC Settings → POST Watchdog Timer**.
2. If the reset occurs after the operating system starts, do one of the followings:
   - Enter the operating system when the system operates normally and set up operating system kernel dump process (Windows and Linux base operating systems will be using different method). Enter the UEFI setup menus and disable the feature, or disable it with the following OneCli command.
     `OneCli.exe config set SystemRecovery.RebootSystemOnNMI Disable --bmc XCC_USER:XCC_PASSWORD@XCC_IPAddress`
   - Disable any automatic server restart (ASR) utilities, such as the Automatic Server Restart IPMI Application for Windows, or any ASR devices that are installed.
3. See the management controller event log to check for an event code that indicates a reboot. See "Event logs" on page 187 for information about viewing the event log. If you are using Linux base operating system, then capture all logs back to Lenovo support for further investigation.

Keyboard, mouse, KVM switch or USB-device problems

Use this information to solve problems related to a keyboard, mouse, KVM switch or USB-device problems.

- "All or some keys on the keyboard do not work" on page 197
- "Mouse does not work" on page 198
- "KVM switch problems" on page 198
- "USB-device does not work" on page 198

All or some keys on the keyboard do not work

1. Make sure that:
   - The keyboard cable is securely connected.
   - The server and the monitor are turned on.
2. If you are using a USB keyboard, run the Setup Utility and enable keyboardless operation.

3. If you are using a USB keyboard and it is connected to a USB hub, disconnect the keyboard from the hub and connect it directly to the server.
4. Replace the keyboard.

Mouse does not work

1. Make sure that:
   - The mouse cable is securely connected to the server.
   - The mouse device drivers are installed correctly.
   - The server and the monitor are turned on.
   - The mouse option is enabled in the Setup Utility.
2. If you are using a USB mouse and it is connected to a USB hub, disconnect the mouse from the hub and connect it directly to the server.
3. Replace the mouse.

KVM switch problems

1. Make sure that the KVM switch is supported by your server.
2. Make sure that the KVM switch is powered on correctly.
3. If the keyboard, mouse or monitor can be operated normally with direct connection to the server, then replace the KVM switch.

USB-device does not work

1. Make sure that:
   - The correct USB device driver is installed.
   - The operating system supports USB devices.
2. Make sure that the USB configuration options are set correctly in system setup.

   Restart the server and press the key according to the on-screen instructions to display the LXPM system setup interface. (For more information, see the "Startup" section in the LXPM documentation compatible with your server at https://pubs.lenovo.com/lxpm-overview/.) Then, click **System Settings → Devices and I/O Ports → USB Configuration**.
3. If you are using a USB hub, disconnect the USB device from the hub and connect it directly to the server.

Memory problems

See this section to resolve issues related to memory.

Common memory problems

- "Multiple memory modules in a channel identified as failing" on page 198
- "Displayed system memory is less than installed physical memory" on page 199
- "Invalid memory population detected" on page 200

Multiple memory modules in a channel identified as failing

Note: Each time you install or remove a memory module, you must disconnect the server from the power source; then, wait 10 seconds before restarting the server.

Complete the following procedure to solve the problem.

1. Reseat the memory modules; then, restart the server.

2. Remove the highest-numbered memory module of those that are identified and replace it with an identical known good memory module; then, restart the server. Repeat as necessary. If the failures continue after all identified memory modules are replaced, go to step 4.
3. Return the removed memory modules, one at a time, to their original connectors, restarting the server after each memory module, until a memory module fails. Replace each failing memory module with an identical known good memory module, restarting the server after each memory module replacement. Repeat step 3 until you have tested all removed memory modules.
4. Replace the highest-numbered memory module of those identified; then, restart the server. Repeat as necessary.
5. Reverse the memory modules between the channels (of the same processor), and then restart the server. If the problem is related to a memory module, replace the failing memory module.
6. (Trained technician only) Install the failing memory module into a memory module connector for processor 2 (if installed) to verify that the problem is not the processor or the memory module connector.
7. (Trained technician only) Replace the system board (system board assembly).

Displayed system memory is less than installed physical memory

Complete the following procedure to solve the problem.

Note: Each time you install or remove a memory module, you must disconnect the server from the power source; then, wait 10 seconds before restarting the server.

1. Make sure that:
   - No error LEDs are lit. See "Troubleshooting by LEDs" on page 189.
   - No memory module error LEDs are lit on the system board (system board assembly).
   - Memory mirrored channel does not account for the discrepancy.
   - The memory modules are seated correctly.
   - You have installed the correct type of memory module (see "Memory module installation rules and order" on page 41 for requirements).
   - After changing or replacing a memory module, memory configuration is updated accordingly in the Setup Utility.
   - All banks of memory are enabled. The server might have automatically disabled a memory bank when it detected a problem, or a memory bank might have been manually disabled.
   - There is no memory mismatch when the server is at the minimum memory configuration.
2. Reseat the memory modules, and then restart the server.
3. Check the POST error log:
   - If a memory module was disabled by a systems-management interrupt (SMI), replace the memory module.
   - If a memory module was disabled by the user or by POST, reseat the memory module; then, run the Setup Utility and enable the memory module.
4. Run memory diagnostics. When you start a solution and press the key according to the on-screen instructions, the LXPM interface is displayed by default. (For more information, see the "Startup" section in the LXPM documentation compatible with your server at https://pubs.lenovo.com/lxpm-overview/.) You can perform memory diagnostics with this interface. From the Diagnostic page, go to **Run Diagnostic → Memory test → Advanced Memory Test**.
5. Reverse the modules between the channels (of the same processor), and then restart the server. If the problem is related to a memory module, replace the failing memory module.
6. Re-enable all memory modules using the Setup Utility, and then restart the server.

7. (Trained technician only) Install the failing memory module into a memory module connector for processor 2 (if installed) to verify that the problem is not the processor or the memory module connector.
8. (Trained technician only) Replace the system board (system board assembly).

Invalid memory population detected

If this warning message appears, complete the following steps:

```
Invalid memory population (unsupported DIMM population) detected. Please verify memory configuration is valid.
```

1. See "Memory module installation rules and order" on page 41 to make sure the present memory module population sequence is supported.
2. If the present sequence is indeed supported, see if any of the modules is displayed as "disabled" in Setup Utility.
3. Reseat the module that is displayed as "disabled," and reboot the system.
4. If the problem persists, replace the memory module.

Monitor and video problems

Use this information to solve problems related to a monitor or video.

- "Incorrect characters are displayed" on page 200
- "Screen is blank" on page 200
- "Screen goes blank when you start some application programs" on page 201
- "The monitor has screen jitter, or the screen image is wavy, unreadable, rolling, or distorted" on page 201
- "The wrong characters appear on the screen" on page 201

Incorrect characters are displayed

Complete the following steps:

1. Verify that the language and locality settings are correct for the keyboard and operating system.
2. If the wrong language is displayed, update the server firmware to the latest level. See "Update the firmware" on page 178.

Screen is blank

Note: Make sure that the expected boot mode has not been changed from the UEFI to Legacy or vice versa.

1. If the server is attached to a KVM switch, bypass the KVM switch to eliminate it as a possible cause of the problem: connect the monitor cable directly to the correct connector on the rear of the server.
2. The management controller remote presence function is disabled if you install an optional video adapter. To use the management controller remote presence function, remove the optional video adapter.
3. If the server is installed with the graphical adapters while turning on the server, the Lenovo logo is displayed on the screen after approximately 3 minutes. This is normal operation while the system loads.
4. Make sure that:
   - The server is turned on and there is power supplied to the server.
   - The monitor cables are connected correctly.
   - The monitor is turned on and the brightness and contrast controls are adjusted correctly.
5. Make sure that the correct server is controlling the monitor, if applicable.
6. Make sure that the video output is not affected by corrupted server firmware; See "Update the firmware" on page 178.
7. If the problem remains, contact Lenovo Support.

Screen goes blank when you start some application programs

1. Make sure that:
   - The application program is not setting a display mode that is higher than the capability of the monitor.
   - You installed the necessary device drivers for the application.

The monitor has screen jitter, or the screen image is wavy, unreadable, rolling, or distorted

1. If the monitor self-tests show that the monitor is working correctly, consider the location of the monitor. Magnetic fields around other devices (such as transformers, appliances, fluorescents, and other monitors) can cause screen jitter or wavy, unreadable, rolling, or distorted screen images. If this happens, turn off the monitor.

   Attention: Moving a color monitor while it is turned on might cause screen discoloration.

   Move the device and the monitor at least 305 mm (12 in.) apart, and turn on the monitor.

   Notes:

   a. To prevent diskette drive read/write errors, make sure that the distance between the monitor and any external diskette drive is at least 76 mm (3 in.).

   b. Non-Lenovo monitor cables might cause unpredictable problems.
2. Reseat the monitor cable.
3. Replace the components listed in step 2 one at a time, in the order shown, restarting the server each time:

   a. Monitor cable

   b. Video adapter (if one is installed)

   c. Monitor

   d. (Trained technician only) System board (system board assembly)

The wrong characters appear on the screen

Complete the following steps until the problem is solved:

1. Verify that the language and locality settings are correct for the keyboard and operating system.
2. If the wrong language is displayed, update the server firmware to the latest level. See "Update the firmware" on page 178.

Network problems

Use this information to resolve issues related to networking.

- "Cannot wake server using Wake on LAN" on page 201
- "Could not log in using LDAP account with SSL enabled" on page 202

Cannot wake server using Wake on LAN

Complete the following steps until the problem is resolved:

1. If you are using the dual-port network adapter and the server is connected to the network using Ethernet 5 connector, check the system-error log or IMM2 system event log (see "Event logs" on page 187), make sure:

   a. The room temperature is not too high (see "Specifications" on page 3).

   b. The air vents are not blocked.

   c. The air baffle is installed securely.

2. Reseat the dual-port network adapter.
3. Turn off the server and disconnect it from the power source; then, wait 10 seconds before restarting the server.
4. If the problem still remains, replace the dual-port network adapter.

Could not log in using LDAP account with SSL enabled

Complete the following steps until the problem is resolved:

1. Make sure that the license key is valid.
2. Generate a new license key and log in again.

Observable problems

Use this information to solve observable problems.

- "Server hangs during the UEFI boot process" on page 202
- "The server immediately displays the POST Event Viewer when it is turned on" on page 202
- "Server is unresponsive (POST is complete and operating system is running)" on page 203
- "Server is unresponsive (POST failed and cannot start System Setup)" on page 203
- "Voltage planar fault is displayed in the event log" on page 203
- "Unusual smell" on page 204
- "Server seems to be running hot" on page 204
- "Cannot enter legacy mode after installing a new adapter" on page 204
- "Cracked parts or cracked chassis" on page 204

Server hangs during the UEFI boot process

If the system hangs during the UEFI boot process with the message `UEFI: DXE INIT` on the display, make sure that Option ROMs were not configured with a setting of **Legacy**. You can remotely view the current settings for Option ROMs by running the following command using the Lenovo XClarity Essentials OneCLI:

```
onecli config show EnableDisableAdapterOptionROMSupport --bmc xcc_userid:xcc_password@xcc_ipaddress
```

To recover a system that hangs during the boot process with Legacy Option ROM settings, see the following Tech Tip:

https://datacentersupport.lenovo.com/solutions/ht506118

If legacy Option ROMs must be used, do not set slot Option ROMs to **Legacy** on the Devices and I/O Ports menu. Instead, set slot Option ROMs to **Auto** (the default setting), and set the System Boot Mode to **Legacy Mode**. Legacy option ROMs will be invoked shortly before the system boots.

The server immediately displays the POST Event Viewer when it is turned on

Complete the following steps until the problem is solved.

1. Correct any errors that are indicated by the system LEDs and diagnostics display.
2. Make sure that the server supports all the processors and that the processors match in speed and cache size.

   You can view processor details from system setup.

   To determine if the processor is supported for the server, see https://serverproven.lenovo.com.

3. (Trained technician only) Make sure that processor 1 is seated correctly.
4. (Trained technician only) Remove processor 2 and restart the server.
5. Replace the following components one at a time, in the order shown, restarting the server each time:
   a. (Trained technician only) Processor
   b. (Trained technician only) System board (system board assembly)

Server is unresponsive (POST is complete and operating system is running)

Complete the following steps until the problem is solved.

- If you are in the same location as the compute node, complete the following steps:
  1. If you are using a KVM connection, make sure that the connection is operating correctly. Otherwise, make sure that the keyboard and mouse are operating correctly.
  2. If possible, log in to the compute node and verify that all applications are running (no applications are hung).
  3. Restart the compute node.
  4. If the problem remains, make sure that any new software has been installed and configured correctly.
  5. Contact your place of purchase of the software or your software provider.
- If you are accessing the compute node from a remote location, complete the following steps:
  1. Make sure that all applications are running (no applications are hung).
  2. Attempt to log out of the system and log back in.
  3. Validate the network access by pinging or running a trace route to the compute node from a command line.
     a. If you are unable to get a response during a ping test, attempt to ping another compute node in the enclosure to determine whether it is a connection problem or compute node problem.
     b. Run a trace route to determine where the connection breaks down. Attempt to resolve a connection issue with either the VPN or the point at which the connection breaks down.
  4. Restart the compute node remotely through the management interface.
  5. If the problem remains, verify that any new software has been installed and configured correctly.
  6. Contact your place of purchase of the software or your software provider.

Server is unresponsive (POST failed and cannot start System Setup)

Configuration changes, such as added devices or adapter firmware updates, and firmware or application code problems can cause the server to fail POST (the power-on self-test).

If this occurs, the server responds in either of the following ways:

- The server restarts automatically and attempts POST again.
- The server hangs, and you must manually restart the server for the server to attempt POST again.

After a specified number of consecutive attempts (automatic or manual), the server reverts to the default UEFI configuration and starts System Setup so that you can make the necessary corrections to the configuration and restart the server. If the server is unable to successfully complete POST with the default configuration, there might be a problem with the system board (system board assembly).

Voltage planar fault is displayed in the event log

Complete the following steps until the problem is solved.

1. Revert the system to the minimum configuration. See "Specifications" on page 3 for the minimally required number of processors and DIMMs.

2. Restart the system.
   - If the system restarts, add each of the removed items one at a time and restart the system each time until the error occurs. Replace the item for which the error occurs.
   - If the system does not restart, suspect the system board (system board assembly).

Unusual smell

Complete the following steps until the problem is solved.

1. An unusual smell might be coming from newly installed equipment.
2. If the problem remains, contact Lenovo Support.

Server seems to be running hot

Complete the following steps until the problem is solved.

Multiple compute nodes or chassis:

1. Make sure that the room temperature is within the specified range (see "Specifications" on page 3).
2. Make sure that the fans are installed correctly.
3. Update the UEFI and XCC to the latest versions.
4. Make sure that the fillers in the server are installed correctly (see Chapter 5 "Hardware replacement procedures" on page 37 for detailed installation procedures).
5. Use the IPMI command to ramp up the fan speed to the full fan speed to see whether the issue can be resolved.

   Note: The IPMI raw command should only be used by trained technician and each system has its own specific IPMI raw command.
6. Check the management processor event log for rising temperature events. If there are no events, the compute node is running within normal operating temperatures. Note that you can expect some variation in temperature.

Cannot enter legacy mode after installing a new adapter

Complete the following procedure to solve the problem.

1. Go to **UEFI Setup → Devices and I/O Ports → Set Option ROM Execution Order**.
2. Move the RAID adapter with operation system installed to the top of the list.
3. Select **Save**.
4. Reboot the system and auto boot to operation system.

Cracked parts or cracked chassis

Contact Lenovo Support.

Optional-device problems

Use this information to solve problems related to optional devices.

- "External USB device is not recognized" on page 205
- "PCIe adapter is not recognized or is not functioning" on page 205
- "Insufficient PCIe resources are detected." on page 205
- "A Lenovo optional device that was just installed does not work." on page 205
- "A Lenovo optional device that worked previously does not work now" on page 206

External USB device is not recognized

Complete the following steps until the problem is resolved:

1. Update the UEFI firmware to the latest version.
2. Make sure that the proper drivers are installed on the compute node. See the product documentation for the USB device for information about device drivers.
3. Use the Setup Utility to make sure that the device is configured correctly.
4. If the USB device is plugged into a hub or the console breakout cable, unplug the device and plug it directly into the USB port on the front of the compute node.

PCIe adapter is not recognized or is not functioning

Complete the following steps until the problem is resolved:

1. Update the UEFI firmware to the latest version.
2. Check the event log and resolve any issues related to the device.
3. Validate that the device is supported for the server (see https://serverproven.lenovo.com). Make sure that the firmware level on the device is at the latest supported level and update the firmware if applicable.
4. Make sure that the adapter is installed in a correct slot.
5. Make sure that the proper device drivers are installed for the device.
6. Resolve any resource conflicts if running legacy mode (UEFI). Check legacy ROM boot orders and modify the UEFI setting for MM config base.

   Note: Ensure that you modify the ROM boot order associated with the PCIe adapter to the first execution order.
7. Check http://datacentersupport.lenovo.com for any tech tips (also known as retain tips or service bulletins) that might be related to the adapter.
8. Ensure any adapter external connections are correct and that the connectors are not physically damaged.
9. Make sure that the PCIe adapter is installed with the supported operating system.

Insufficient PCIe resources are detected.

If you see an error message stating “Insufficient PCI Resources Detected,” complete the following steps until the problem is resolved:

1. Press Enter to access System Setup Utility.
2. Select **System Settings → Devices and I/O Ports → PCI 64–Bit Resource Allocation**, then; modify the setting from **Auto** to **Enable**.
3. If the Boot Device does not support MMIO above 4GB for Legacy Boot, use UEFI Boot Mode or remove/disable some PCIe devices.
4. DC cycle the system and ensure the system is enter UEFI boot menu or the operating system; then, capture the FFDC log.
5. Contact Lenovo technical support.

A Lenovo optional device that was just installed does not work.

1. Make sure that:
   - The device is supported for the server (see https://serverproven.lenovo.com).
   - You followed the installation instructions that came with the device and the device is installed correctly.
   - You have not loosened any other installed devices or cables.

- You updated the configuration information in system setup. When you start a server and press the key according to the on-screen instructions to display the Setup Utility. (For more information, see the "Startup" section in the LXPM documentation compatible with your server at https://pubs.lenovo.com/lxpm-overview/.) Whenever memory or any other device is changed, you must update the configuration.

2. Reseat the device that you have just installed.
3. Replace the device that you have just installed.
4. Reseat the cable connection and check there is no physical damage to the cable.
5. If there is any cable damage, then replace the cable.

A Lenovo optional device that worked previously does not work now

1. Make sure that all of the cable connections for the device are secure.
2. If the device comes with test instructions, use those instructions to test the device.
3. Reseat the cable connection and check if any physical parts have been damaged.
4. Replace the cable.
5. Reseat the failing device.
6. Replace the failing device.

Performance problems

Use this information to solve performance problems.

- "Network performance" on page 206
- "Operating system performance" on page 206

Network performance

Complete the following steps until the problem is solved:

1. Isolate which network is operating slowly (such as storage, data, and management). You might find it helpful to use ping tools or operating-system tools such as task manager or resource manager.
2. Check for traffic congestion on the network.
3. Update the NIC device driver, or the storage device controller device driver.
4. Use the traffic-diagnostic tools that are provided by the IO-module manufacturer.

Operating system performance

Complete the following steps until the problem is solved:

1. If you have recently made changes to the compute node (for example updated device drivers or installed software applications) remove the changes.
2. Check for any networking issues.
3. Check the operating system logs for performance related errors.
4. Check for events related to high temperatures and power issues as the compute node might be throttled to help with cooling. If it is throttled, reduce the workload on the compute node to help improve performance.
5. Check for events related to disabled DIMMs. If you do not have enough memory for the application workload, your operating system will have poor performance.
6. Ensure that the workload is not too high for the configuration.

Power on and power off problems

Use this information to resolve issues when powering on or powering off the server.

- "The power button does not work (server does not start)" on page 207
- "Server does not power on" on page 207

The power button does not work (server does not start)

Note: The power button will not function until approximately 1 to 3 minutes after the server has been connected to ac power to allow time for BMC to initialize.

Complete the following steps until the problem is resolved:

1. Make sure that the power button on the server is working correctly:
   a. Disconnect the server power cords.
   b. Reconnect the server power cords.
   c. Reseat the front operator panel cable, and then repeat steps 1a and 2b.
      - If the server starts, reseat the front operator panel.
      - If the problem remains, replace the front operator panel.
2. Make sure that:
   - The power cords are correctly connected to the server and to a working electrical outlet.
   - The LEDs on the power supply do not indicate a problem.
   - The Power button LED lights up and flash slowly.
   - The push force is enough and with button force response.
3. If the power button LED didn't light up or flash correctly, reseat all the power supplies and make sure the AC LEDs on the PSU rear side light up.
4. If you have just installed an optional device, remove it, and restart the server.
5. If the issue is still observed or without power button LED lighting up, implement the minimum configuration to check whether any specific components lock the power permission. Replace the each power supply and check the power button function after installing the each one.
6. If everything is still done and the issue cannot be resolved, collect the failure information with system logs captured to Lenovo support.

Server does not power on

Complete the following steps until the problem is resolved:

1. Check the event log for any events related to the server not powering on.
2. Check for any LEDs that are flashing amber.
3. Check the power LED on the system board (system board assembly).
4. Check if the AC power LED lights up or the amber LED lights up at the PSU rear side.
5. AC cycle the system.
6. Remove the CMOS battery for at least ten seconds, then, reinstall the CMOS battery.
7. Try to power on the system by IPMI command through XCC or by the power button.
8. Implement the minimum configuration (one processor, one DIMM and one PSU without any adapter and any drive installed).
9. Reseat all power supplies and make sure that the AC LEDs on the PSU rear side light up.
10. Replace the each power supply and check the power button function after installing the each one.

11. If the issue cannot be resolved by above actions, call service to review the issue symptom and see whether the system board (system board assembly) replacement is necessary.

Power problems

Use this information to resolve issues related to power.

System error LED is on and event log "Power supply has lost input" is displayed

To resolve the problem, ensure that:

1. The power supply is properly connected to a power cord.
2. The power cord is connected to a properly grounded electrical outlet for the server.
3. Make sure that the power supply AC source is stable within the supported range.
4. Swap the power supply to see if the issue follows the power supply, if it follows the power supply, then replace the failing one.
5. Review the event log and see how the problem it is to follow the event log actions to resolve the problems.

Serial-device problems

Use this information to solve problems with serial ports or devices.

- "Number of displayed serial ports is less than the number of installed serial ports" on page 208
- "Serial device does not work" on page 208

Number of displayed serial ports is less than the number of installed serial ports

Complete the following steps until the problem is solved.

1. Make sure that:
   - Each port is assigned a unique address in the Setup Utility and none of the serial ports is disabled.
   - The serial-port adapter (if one is present) is seated correctly.
2. Reseat the serial port adapter.
3. Replace the serial port adapter.

Serial device does not work

1. Make sure that:
   - The device is compatible with the server.
   - The serial port is enabled and is assigned a unique address.
   - The device is connected to the correct connector (see "System-board connectors" on page 23).
2. Reseat the following components:
   a. Failing serial device.
   b. Serial cable.
3. Replace the following components:
   a. Failing serial device.
   b. Serial cable.
4. (Trained technician only) Replace the system board (system board assembly).

Software problems

Use this information to solve software problems.

1. To determine whether the problem is caused by the software, make sure that:
   - The server has the minimum memory that is needed to use the software. For memory requirements, see the information that comes with the software.

     Note: If you have just installed an adapter or memory, the server might have a memory-address conflict.
   - The software is designed to operate on the server.
   - Other software works on the server.
   - The software works on another server.
2. If you receive any error messages while you use the software, see the information that comes with the software for a description of the messages and suggested solutions to the problem.
3. Contact your place of purchase of the software.

Storage drive problems

Use this information to resolve issues related to the storage drives.

- "Server cannot recognize a drive" on page 209
- "Multiple drives fail" on page 210
- "Multiple drives are offline" on page 210
- "A replacement drive does not rebuild" on page 210
- "Green drive activity LED does not represent actual state of associated drive" on page 210

Server cannot recognize a drive

Complete the following steps until the problem is solved.

1. Observe the associated yellow drive status LED. If the LED is lit, it indicates a drive fault.
2. If the status LED is lit, remove the drive from the bay, wait 45 seconds, and reinsert the drive, making sure that the drive assembly connects to the drive backplane.
3. Observe the associated green drive activity LED and the yellow status LED and perform corresponding operations in different situations:
   - If the green activity LED is flashing and the yellow status LED is not lit, the drive is recognized by the controller and is working correctly. Run the diagnostics tests for the drives. When you start a server and press the key according to the on-screen instructions, the LXPM is displayed by default. (For more information, see the "Startup" section in the LXPM documentation compatible with your server at https://pubs.lenovo.com/lxpm-overview/.) You can perform drive diagnostics from this interface. From the Diagnostic page, click **Run Diagnostic → Disk Drive Test**.
   - If the green activity LED is flashing and the yellow status LED is flashing slowly, the drive is recognized by the controller and is rebuilding.
   - If neither LED is lit or flashing, check whether the drive backplane is correctly seated. For details, go to step 4.
   - If the green activity LED is flashing and the yellow status LED is lit, replace the drive.
4. Make sure that the drive backplane is correctly seated. When it is correctly seated, the drive assemblies correctly connect to the backplane without bowing or causing movement of the backplane.
5. Reseat the backplane power cable and repeat steps 1 through 3.
6. Reseat the backplane signal cable and repeat steps 1 through 3.

7. Suspect the backplane signal cable or the backplane:
   - Replace the affected backplane signal cable.
   - Replace the affected backplane.
8. Run the diagnostics tests for the drives. When you start a server and press the key according to the on-screen instructions, the LXPM is displayed by default. (For more information, see the “Startup” section in the LXPM documentation compatible with your server at https://pubs.lenovo.com/lxpm-overview/.) You can perform drive diagnostics from this interface. From the Diagnostic page, click **Run Diagnostic → Disk Drive Test**.

   Based on those tests:
   - If the backplane passes the test but the drives are not recognized, replace the backplane signal cable and run the tests again.
   - Replace the backplane.
   - If the adapter fails the test, disconnect the backplane signal cable from the adapter and run the tests again.
   - If the adapter fails the test, replace the adapter.

Multiple drives fail

Complete the following steps until the problem is solved:

- View the Lenovo XClarity Controller event log for events related to power supplies or vibration issues and resolve those events.
- Make sure that the device drivers and firmware for the drive and server are at the latest level.

Important: Some cluster solutions require specific code levels or coordinated code updates. If the device is part of a cluster solution, verify that the latest level of code is supported for the cluster solution before you update the code.

Multiple drives are offline

Complete the following steps until the problem is solved:

- View the Lenovo XClarity Controller event log for events related to power supplies or vibration issues and resolve those events.
- View the storage subsystem log for events related to the storage subsystem and resolve those events.

A replacement drive does not rebuild

Complete the following steps until the problem is solved:

1. Make sure that the drive is recognized by the adapter (the green drive activity LED is flashing).
2. Review the SAS/SATA RAID adapter documentation to determine the correct configuration parameters and settings.

Green drive activity LED does not represent actual state of associated drive

Complete the following steps until the problem is solved:

1. If the green drive activity LED does not flash when the drive is in use, run the diagnostics tests for the drives. When you start a server and press the key according to the on-screen instructions, the LXPM is displayed by default. (For more information, see the “Startup” section in the LXPM documentation compatible with your server at https://pubs.lenovo.com/lxpm-overview/.) You can perform drive diagnostics from this interface. From the Diagnostic page, click **Run Diagnostic → Disk Drive Test**
2. If the drive passes the test, replace the backplane.
3. If the drive fails the test, replace the drive.

Appendix A. Hardware disassembling for recycle

Follow the instructions in this section to recycle components with compliance with local laws or regulations.

Disassemble the system board for recycle

Follow the instructions in this section to disassemble the system board before recycling.

About this task

Attention:

- Read "Installation Guidelines" on page 37 and "Safety inspection checklist" on page 38 to ensure that you work safely.
- Power off the server and peripheral devices and disconnect the power cords and all external cables. See "Power off the server" on page 43.
- If the server is in a rack, remove it from the rack. See "Remove the server from rack" on page 43.
- Remove any locking device that secures the server, such as a Kensington lock or a padlock.
- Place the server on its side with the cover up.

Procedure

Step 1. Remove the server cover. See "Remove the server cover" on page 154.

Step 2. Remove the front bezel. See "Remove the front bezel" on page 97.

Step 3. If applicable, remove the optical drive. See "Remove an optical drive" on page 83.

Step 4. If applicable, remove the optical drive cage. See "Remove an optical drive cage" on page 89.

Step 5. Remove the cage bar. See step 3 in "Remove the server cover" on page 154.

Step 6. Remove the intrusion switch. See "Remove the intrusion switch" on page 106.

Step 7. If applicable, remove the drive cage (bay 3). See "Remove the drive cage (bay 3)" on page 79.

Step 8. Remove all the system fan. See "Remove the fan (front and rear)" on page 92.

Step 9. Remove the heat sink and fan module. See "Remove the heat sink and fan module (trained technician only)" on page 99.

Step 10. Remove the M.2 boot adapter. See "Remove the M.2 boot adapter" on page 109.

Step 11. Remove the PCIe adapters. See "Remove a PCIe adapter" on page 124.

Step 12. Remove the memory modules. See "Remove a memory module" on page 118.

Step 13. Remove the processor. See "Remove the processor (trained technician only)" on page 134.

Step 14. Remove the firmware and RoT security module. See "Remove the firmware and RoT security module" on page 139.

Step 15. Remove the front I/O bracket.

a. Remove the screw the secures the front I/O bracket to the chassis.

© Copyright Lenovo 2024, 2025

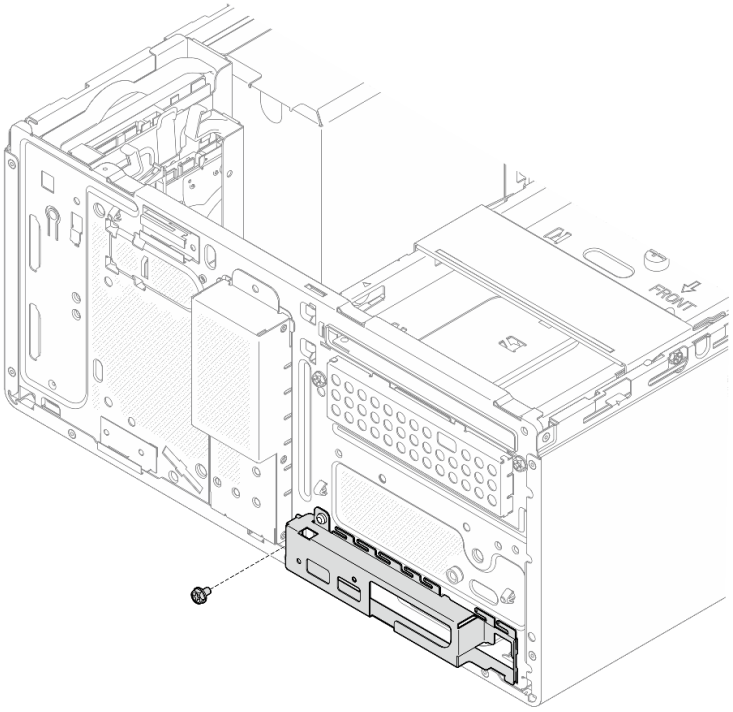

Figure 139. Removing the screw that secures the front I/O bracket to the chassis

b. ❶ Rotate the left end of the front I/O bracket away from the chassis.

c. ❷ Remove the front I/O bracket from the chassis.

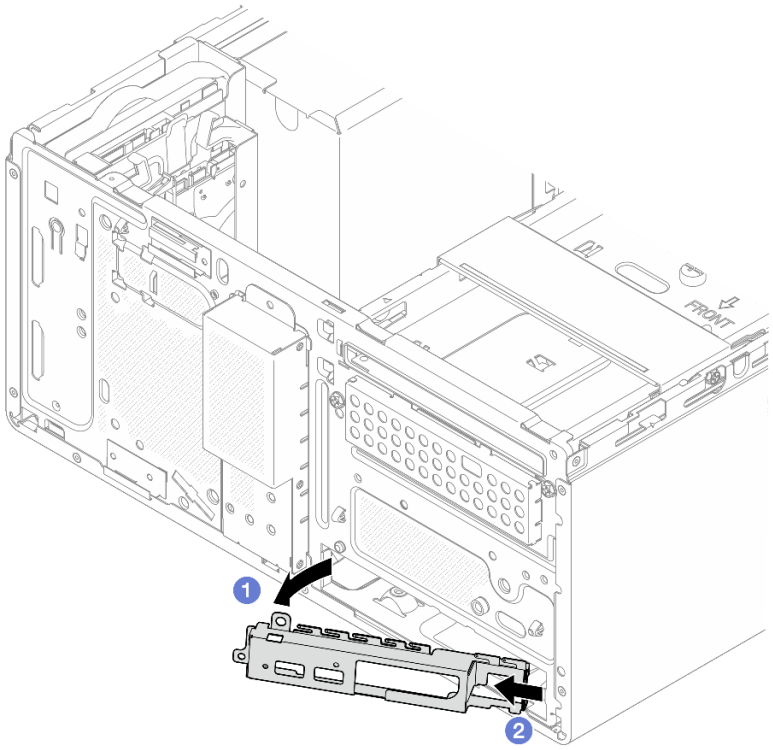

Figure 140. Removing the front I/O bracket from the chassis

Step 16. Make sure no cable is connected to the system board.

Attention: To avoid damaging the system board, make sure to follow the instructions in Chapter 6 "Internal cable routing" on page 161 when disconnecting cables from the system board.

Step 17. Remove the system board. See "Remove the system board" on page 144.

After disassembling the server, recycle the unit in compliance with local regulations.

Appendix B. Getting help and technical assistance

If you need help, service, or technical assistance or just want more information about Lenovo products, you will find a wide variety of sources available from Lenovo to assist you.

On the World Wide Web, up-to-date information about Lenovo systems, optional devices, services, and support are available at:

http://datacentersupport.lenovo.com

Note: IBM is Lenovo's preferred service provider for ThinkSystem.

Before you call

Before you call, there are several steps that you can take to try and solve the problem yourself. If you decide that you do need to call for assistance, gather the information that will be needed by the service technician to more quickly resolve your problem.

Attempt to resolve the problem yourself

You can solve many problems without outside assistance by following the troubleshooting procedures that Lenovo provides in the online help or in the Lenovo product documentation. The online help also describes the diagnostic tests that you can perform. The documentation for most systems, operating systems, and programs contains troubleshooting procedures and explanations of error messages and error codes. If you suspect a software problem, see the documentation for the operating system or program.

You can find the product documentation for your ThinkSystem products at the following location:

https://pubs.lenovo.com/

You can take these steps to try to solve the problem yourself:

- Check all cables to make sure that they are connected.
- Check the power switches to make sure that the system and any optional devices are turned on.
- Check for updated software, firmware, and operating-system device drivers for your Lenovo product. (See the following links) The Lenovo Warranty terms and conditions state that you, the owner of the Lenovo product, are responsible for maintaining and updating all software and firmware for the product (unless it is covered by an additional maintenance contract). Your service technician will request that you upgrade your software and firmware if the problem has a documented solution within a software upgrade.
  - Drivers and software downloads
    - https://datacentersupport.lenovo.com/tw/en/products/servers/thinksystem/st50v3/7df3/downloads/driver-list/
  - Operating system support center
    - https://datacentersupport.lenovo.com/solutions/server-os
  - Operating system installing instructions
    - https://pubs.lenovo.com/thinksystem#os-installation
- If you have installed new hardware or software in your environment, check https://serverproven.lenovo.com to make sure that the hardware and software are supported by your product.
- Refer to Chapter 8 “Problem determination” on page 187 for instructions on isolating and solving issues.

© Copyright Lenovo 2024, 2025

- Go to http://datacentersupport.lenovo.com and check for information to help you solve the problem.

  To find the Tech Tips available for your server:

  1. Go to http://datacentersupport.lenovo.com and navigate to the support page for your server.
  2. Click on **How To's** from the navigation pane.
  3. Click **Article Type → Solution** from the drop-down menu.

     Follow the on-screen instructions to choose the category for the problem that you are having.
- Check Lenovo Data Center Forum at https://forums.lenovo.com/t5/Datacenter-Systems/ct-p/sv_eg to see if someone else has encountered a similar problem.

Gathering information needed to call Support

If you require warranty service for your Lenovo product, the service technicians will be able to assist you more efficiently if you prepare the appropriate information before you call. You can also go to http://datacentersupport.lenovo.com/warrantylookup for more information about your product warranty.

Gather the following information to provide to the service technician. This data will help the service technician quickly provide a solution to your problem and ensure that you receive the level of service for which you might have contracted.

- Hardware and Software Maintenance agreement contract numbers, if applicable
- Machine type number (Lenovo 4-digit machine identifier). Machine type number can be found on the ID label, see "Identify the server and access the Lenovo XClarity Controller" on page 31.
- Model number
- Serial number
- Current system UEFI and firmware levels
- Other pertinent information such as error messages and logs

As an alternative to calling Lenovo Support, you can go to https://support.lenovo.com/servicerequest to submit an Electronic Service Request. Submitting an Electronic Service Request will start the process of determining a solution to your problem by making the pertinent information available to the service technicians. The Lenovo service technicians can start working on your solution as soon as you have completed and submitted an Electronic Service Request.

Collecting service data

To clearly identify the root cause of a server issue or at the request of Lenovo Support, you might need collect service data that can be used for further analysis. Service data includes information such as event logs and hardware inventory.

Service data can be collected through the following tools:

- **Lenovo XClarity Provisioning Manager**

  Use the Collect Service Data function of Lenovo XClarity Provisioning Manager to collect system service data. You can collect existing system log data or run a new diagnostic to collect new data.
- **Lenovo XClarity Controller**

  You can use the Lenovo XClarity Controller web interface or the CLI to collect service data for the server. The file can be saved and sent to Lenovo Support.

  – For more information about using the web interface to collect service data, see the "Backing up the BMC configuration" section in the XCC documentation compatible with your server at https://pubs.lenovo.com/lxcc-overview/.

- For more information about using the CLI to collect service data, see the “XCC `ffdc` command” section in the XCC documentation compatible with your server at https://pubs.lenovo.com/lxcc-overview/.

- **Lenovo XClarity Administrator**

  Lenovo XClarity Administrator can be set up to collect and send diagnostic files automatically to Lenovo Support when certain serviceable events occur in Lenovo XClarity Administrator and the managed endpoints. You can choose to send diagnostic files to Lenovo Support using Call Home or to another service provider using SFTP. You can also manually collect diagnostic files, open a problem record, and send diagnostic files to the Lenovo Support.

  You can find more information about setting up automatic problem notification within the Lenovo XClarity Administrator at https://pubs.lenovo.com/lxca/admin_setupcallhome.

- **Lenovo XClarity Essentials OneCLI**

  Lenovo XClarity Essentials OneCLI has inventory application to collect service data. It can run both in-band and out-of-band. When running in-band within the host operating system on the server, OneCLI can collect information about the operating system, such as the operating system event log, in addition to the hardware service data.

  To obtain service data, you can run the `getinfor` command. For more information about running the `getinfor`, see https://pubs.lenovo.com/lxce-onecli/onecli_r_getinfor_command.

Contacting Support

You can contact Support to obtain help for your issue.

You can receive hardware service through a Lenovo Authorized Service Provider. To locate a service provider authorized by Lenovo to provide warranty service, go to https://datacentersupport.lenovo.com/serviceprovider and use filter searching for different countries. For Lenovo support telephone numbers, see https://datacentersupport.lenovo.com/supportphonelist for your region support details.

Appendix C. Documents and supports

This section provides handy documents, driver and firmware downloads, and support resources.

Documents download

This section provides introduction and download link for handy documents.

Documents

Download the following product documentations at:

https://pubs.lenovo.com/st50-v3/pdf_files.html

- ***Rail Installation Guides***
  - Rail installation in a rack
- ***User Guide***
  - Complete overview, system configuration, hardware components replacing, and troubleshooting.

    Selected chapters from *User Guide*:
    - ***System Configuration Guide*** **:** Server overview, components identification, system LEDs and diagnostics display, product unboxing, setting up and configuring the server.
    - ***Hardware Maintenance Guide*** **:** Installing hardware components, cable routing, and troubleshooting.
- ***Messages and Codes Reference***
  - XClarity Controller, LXPM, and uEFI events
- ***UEFI Manual***
  - UEFI setting introduction

Support websites

This section provides driver and firmware downloads and support resources.

Support and downloads

- Drivers and Software download website for ThinkSystem ST50 V3
  - https://datacentersupport.lenovo.com/tw/en/products/servers/thinksystem/st50v3/7df3/downloads/driver-list/
- Lenovo Data Center Forum
  - https://forums.lenovo.com/t5/Datacenter-Systems/ct-p/sv_eg
- Lenovo Data Center Support for ThinkSystem ST50 V3
  - https://datacentersupport.lenovo.com/products/servers/thinksystem/st50v3/7df3
- Lenovo License Information Documents
  - https://datacentersupport.lenovo.com/documents/lnvo-eula
- Lenovo Press website (Product Guides/Datasheets/White papers)
  - https://lenovopress.lenovo.com/

© Copyright Lenovo 2024, 2025

- Lenovo Privacy Statement
  - https://www.lenovo.com/privacy
- Lenovo Product Security Advisories
  - https://datacentersupport.lenovo.com/product_security/home
- Lenovo Product Warranty Plans
  - http://datacentersupport.lenovo.com/warrantylookup
- Lenovo Server Operating Systems Support Center website
  - https://datacentersupport.lenovo.com/solutions/server-os
- Lenovo ServerProven website (Options compatibility lookup)
  - https://serverproven.lenovo.com
- Operating System Installation Instructions
  - https://pubs.lenovo.com/thinksystem#os-installation
- Submit an eTicket (service request)
  - https://support.lenovo.com/servicerequest
- Subscribe to Lenovo Data Center Group product notifications (Stay up to date on firmware updates)
  - https://datacentersupport.lenovo.com/solutions/ht509500

Appendix D. Notices

Lenovo may not offer the products, services, or features discussed in this document in all countries. Consult your local Lenovo representative for information on the products and services currently available in your area.

Any reference to a Lenovo product, program, or service is not intended to state or imply that only that Lenovo product, program, or service may be used. Any functionally equivalent product, program, or service that does not infringe any Lenovo intellectual property right may be used instead. However, it is the user's responsibility to evaluate and verify the operation of any other product, program, or service.

Lenovo may have patents or pending patent applications covering subject matter described in this document. The furnishing of this document is not an offer and does not provide a license under any patents or patent applications. You can send inquiries in writing to the following:

Lenovo (United States), Inc.
8001 Development Drive
Morrisville, NC 27560
U.S.A.
Attention: Lenovo Director of Licensing

LENOVO PROVIDES THIS PUBLICATION “AS IS” WITHOUT WARRANTY OF ANY KIND, EITHER EXPRESS OR IMPLIED, INCLUDING, BUT NOT LIMITED TO, THE IMPLIED WARRANTIES OF NON-INFRINGEMENT, MERCHANTABILITY OR FITNESS FOR A PARTICULAR PURPOSE. Some jurisdictions do not allow disclaimer of express or implied warranties in certain transactions, therefore, this statement may not apply to you.

This information could include technical inaccuracies or typographical errors. Changes are periodically made to the information herein; these changes will be incorporated in new editions of the publication. Lenovo may make improvements and/or changes in the product(s) and/or the program(s) described in this publication at any time without notice.

The products described in this document are not intended for use in implantation or other life support applications where malfunction may result in injury or death to persons. The information contained in this document does not affect or change Lenovo product specifications or warranties. Nothing in this document shall operate as an express or implied license or indemnity under the intellectual property rights of Lenovo or third parties. All information contained in this document was obtained in specific environments and is presented as an illustration. The result obtained in other operating environments may vary.

Lenovo may use or distribute any of the information you supply in any way it believes appropriate without incurring any obligation to you.

Any references in this publication to non-Lenovo Web sites are provided for convenience only and do not in any manner serve as an endorsement of those Web sites. The materials at those Web sites are not part of the materials for this Lenovo product, and use of those Web sites is at your own risk.

Any performance data contained herein was determined in a controlled environment. Therefore, the result obtained in other operating environments may vary significantly. Some measurements may have been made on development-level systems and there is no guarantee that these measurements will be the same on generally available systems. Furthermore, some measurements may have been estimated through extrapolation. Actual results may vary. Users of this document should verify the applicable data for their specific environment.

© Copyright Lenovo 2024, 2025

Trademarks

LENOVO, THINKSYSTEM, Flex System, System x, NeXtScale System, xArchitecture, ThinkEdge, and Neptune are trademarks of Lenovo.

Intel and Intel Xeon are trademarks of Intel Corporation in the United States, other countries, or both.

Internet Explorer, Microsoft, and Windows are trademarks of the Microsoft group of companies.

Linux is a registered trademark of Linus Torvalds.

All other trademarks are the property of their respective owners. © 2018 Lenovo.

Important notes

Processor speed indicates the internal clock speed of the processor; other factors also affect application performance.

CD or DVD drive speed is the variable read rate. Actual speeds vary and are often less than the possible maximum.

When referring to processor storage, real and virtual storage, or channel volume, KB stands for 1 024 bytes, MB stands for 1 048 576 bytes, and GB stands for 1 073 741 824 bytes.

When referring to hard disk drive capacity or communications volume, MB stands for 1 000 000 bytes, and GB stands for 1 000 000 000 bytes. Total user-accessible capacity can vary depending on operating environments.

Maximum internal hard disk drive capacities assume the replacement of any standard hard disk drives and population of all hard-disk-drive bays with the largest currently supported drives that are available from Lenovo.

Maximum memory might require replacement of the standard memory with an optional memory module.

Each solid-state memory cell has an intrinsic, finite number of write cycles that the cell can incur. Therefore, a solid-state device has a maximum number of write cycles that it can be subjected to, expressed as `total bytes written` (TBW). A device that has exceeded this limit might fail to respond to system-generated commands or might be incapable of being written to. Lenovo is not responsible for replacement of a device that has exceeded its maximum guaranteed number of program/erase cycles, as documented in the Official Published Specifications for the device.

Lenovo makes no representations or warranties with respect to non-Lenovo products. Support (if any) for the non-Lenovo products is provided by the third party, not Lenovo.

Some software might differ from its retail version (if available) and might not include user manuals or all program functionality.

Electronic emission notices

When you attach a monitor to the equipment, you must use the designated monitor cable and any interference suppression devices that are supplied with the monitor.

Additional electronic emissions notices are available at:

https://pubs.lenovo.com/important_notices/

Taiwan Region BSMI RoHS declaration

單元 Unit	限用物質及其化學符號 Restricted substances and its chemical symbols					
	鉛Lead (PB)	汞Mercury (Hg)	鎘Cadmium (Cd)	六價鉻 Hexavalent chromium (Cr^{+6})	多溴聯苯 Polybrominated biphenyls (PBB)	多溴二苯醚 Polybrominated diphenyl ethers (PBDE)
機架	○	○	○	○	○	○
外部蓋板	○	○	○	○	○	○
機械組合件	–	○	○	○	○	○
空氣傳動設備	–	○	○	○	○	○
冷卻組合件	–	○	○	○	○	○
內存模組	–	○	○	○	○	○
處理器模組	–	○	○	○	○	○
電纜組合件	–	○	○	○	○	○
電源供應器	–	○	○	○	○	○
儲備設備	–	○	○	○	○	○
印刷電路板	–	○	○	○	○	○

備考1.〝超出0.1 wt %〞及〝超出0.01 wt %〞係指限用物質之百分比含量超出百分比含量基準值。

Note1 : "exceeding 0.1wt%" and "exceeding 0.01 wt%" indicate that the percentage content of the restricted substance exceeds the reference percentage value of presence condition.

備考2.〝○〞係指該項限用物質之百分比含量未超出百分比含量基準值。

Note2 : "○"indicates that the percentage content of the restricted substance does not exceed the percentage of reference value of presence.

備考3.〝-〞係指該項限用物質為排除項目。

Note3 : The "-" indicates that the restricted substance corresponds to the exemption.

Taiwan Region import and export contact information

Contacts are available for Taiwan Region import and export information.

委製商/進口商名稱: 台灣聯想環球科技股份有限公司
進口商地址: 台北市南港區三重路 66 號 8 樓
進口商電話: 0800-000-702

China Energy Label (CEL)

本产品的中国能效标识加施在服务器产品本体上。
中国能效标识中的配置类型Type 1、Type 2、Type 3分别对应能效等级1、2、3级的产品配置。同一规格型号下产品配置会有所不同。（此描述仅适用于中国能效范围内的产品)

Lenovo