ThinkSystem SR850 V2
Setup Guide

Machine Types: 7D31 and 7D32

Note

Before using this information and the product it supports, be sure to read and understand the safety information and the safety instructions, which are available at:
https://pubs.lenovo.com/safety_documentation/

In addition, be sure that you are familiar with the terms and conditions of the Lenovo warranty for your server, which can be found at:
http://datacentersupport.lenovo.com/warrantylookup

Eleventh edition (January 2025)

© Copyright Lenovo 2020, 2025.

LIMITED AND RESTRICTED RIGHTS NOTICE: If data or software is delivered pursuant to a General Services Administration (GSA) contract, use, reproduction, or disclosure is subject to restrictions set forth in Contract No. GS-35F-05925.

Contents

Contents i

Safety iii

Safety inspection checklist iv

Chapter 1. Introduction 1

Server package contents 2

Features. 2

Specifications 4

Particulate contamination 9

Management options. 10

Chapter 2. Server components 15

Front view 17

External LCD diagnostics handset 19

Rear view 25

Identifying connectors 29

System board connectors 30

Processor and memory expansion tray connectors 32

Power backplane connectors. 33

2.5-inch 8-bay drive backplane connectors . . 33

PCIe riser card connectors. 35

Parts list. 38

Power cords 42

Chapter 3. Internal cable routing . . . 43

Cable routing for 2.5-inch drives 43

Connecting cables to the processor and memory expansion tray 46

Connecting cables to the NVMe switch cards 48

SAS/SATA backplane combinations 49

NVMe backplane combinations 62

One-AnyBay-backplane combinations 68

Two-AnyBay-backplane combinations 86

Three-AnyBay-backplane combinations . . . 98

Chapter 4. Server options 105

2.5-inch drive backplane kits. 105

2.5-inch SAS/SATA 8-bay drive backplane kit 106

2.5-inch AnyBay/NVMe 8-bay drive backplane kit 107

2.5-inch drive SAS/SATA cable kit 107

Flash power module holder kit 108

Intrusion switch cable kit 109

7mm drive cage kit 109

PCIe riser cards 111

x16/x16 (x8 lanes) FH/HL PCIe riser kit 111

x16/x16 (x8 lanes) FH/HL PCIe riser kit with 7mm drive cage bracket. 112

x16/x16/x16 PCIe riser kit 113

x16/x16 FH/HL PCIe riser kit 113

Processor and memory expansion tray kit 114

Chapter 5. Server hardware setup 117

Server setup checklist 117

Installation Guidelines 118

Safety inspection checklist. 119

System reliability guidelines 120

Working inside the server with the power on 120

Handling static-sensitive devices 120

Memory module installation order. 121

DRAM DIMMs installation order. 121

PMEM and DRAM DIMM installation order . . 126

Install hot-swap server hardware options 131

Install a 7mm drive 131

Install a 2.5-inch hot-swap drive 132

Install a hot-swap power supply unit 134

Remove the top cover 137

Remove a 7mm drive. 138

Install server hardware options in the server 139

Remove the fan cage assembly 139

Install a drive backplane. 140

Install the intrusion switch 141

Remove the PCIe riser assembly 142

Install an adapter 144

Install a flash power module and holder. . . . 147

Install the OCP Ethernet adapter 151

Install the PCIe riser assembly 152

Remove the system board air baffle 155

Remove the processor and memory expansion tray 155

Install a processor-heat-sink module. 159

Install a memory module 162

Install the 7mm drive cage 165

Install the processor and memory expansion tray 166

Install the fan cage assembly 169

Install the top cover 170

Cable the server 172

Power on the server 172

© Copyright Lenovo 2020, 2025

Validate server setup 172
Power off the server 173

Chapter 6. System configuration 175

Set the network connection for the Lenovo XClarity Controller 175
Set front USB port for Lenovo XClarity Controller connection. 176
Update the firmware 177
Configure the firmware 180
Memory configuration 181
RAID configuration 181
Deploy the operating system. 182
Back up the server configuration 183
Update the Vital Product Data (VPD) 183
Update the Universal Unique Identifier (UUID). 183
Update the asset tag 185

Chapter 7. Resolving installation issues 187

Appendix A. Getting help and technical assistance 193

Before you call 193
Collecting service data 194
Contacting Support 195

Index 197

Safety

Before installing this product, read the Safety Information.

قبل تركيب هذا المنتج، يجب قراءة الملاحظات الآمنية

Antes de instalar este produto, leia as Informações de Segurança.

在安装本产品之前，请仔细阅读 Safety Information
(安全信息)。

安裝本產品之前，請先閱讀「安全資訊」。

Prije instalacije ovog produkta obavezno pročitajte Sigurnosne Upute.

Před instalací tohoto produktu si přečtěte příručku bezpečnostních instrukcí.

Læs sikkerhedsforskrifterne, før du installerer dette produkt.

Lees voordat u dit product installeert eerst de veiligheidsvoorschriften.

Ennen kuin asennat tämän tuotteen, lue turvaohjeet kohdasta Safety Information.

Avant d'installer ce produit, lisez les consignes de sécurité.

Vor der Installation dieses Produkts die Sicherheitshinweise lesen.

Πριν εγκαταστήσετε το προϊόν αυτό, διαβάστε τις πληροφορίες ασφάλειας
(safety information).

לפני שתתקינו מוצר זה, קראו את הוראות הבטיחות.

A termék telepítése előtt olvassa el a Biztonsági előírásokat!

Prima di installare questo prodotto, leggere le Informazioni sulla Sicurezza.

製品の設置の前に、安全情報をお読みください。

본 제품을 설치하기 전에 안전 정보를 읽으십시오.

Пред да се инсталира овој продукт, прочитајте информацијата за безбедност.

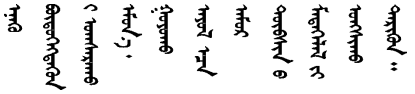

Les sikkerhetsinformasjonen (Safety Information) før du installerer dette produktet.

Przed zainstalowaniem tego produktu, należy zapoznać się
z książką "Informacje dotyczące bezpieczeństwa" (Safety Information).

Antes de instalar este produto, leia as Informações sobre Segurança.

© Copyright Lenovo 2020, 2025

Перед установкой продукта прочтите инструкции по
технике безопасности.

Pred inštaláciou tohto zariadenia si pečítaje Bezpečnostné predpisy.

Pred namestitvijo tega proizvoda preberite Varnostne informacije.

Antes de instalar este producto, lea la información de seguridad.

Läs säkerhetsinformationen innan du installerar den här produkten.

ཐོན་རྫས་འདི་བདེ་སྤྱོད་མ་བྱས་གོང་། ་སྐོར་གྱི་ཡིད་གཟབ་
བྱ་འདྲ་མིན་ཡོད་པའི་འོད་སྡེར་བལྟ་དགོས།

Bu ürünü kurmadan önce güvenlik bilgilerini okuyun.

مەزكۇر مەھسۇلاتنى ئورنىتىشتىن بۇرۇن بىخەتەرلىك ئۇچۇرلىرىنى ئوقۇپ چىقىڭ.

Youq mwngz yungh canjbinj neix gaxgonq, itdingh aeu doeg aen
canjbinj soengq cungj vahgangj ancien siusik.

Safety inspection checklist

Use the information in this section to identify potentially unsafe conditions with your server. As each machine was designed and built, required safety items were installed to protect users and service technicians from injury.

Notes:

1. The product is not suitable for use at visual display workplaces according to §2 of the Workplace Regulations.
2. The set-up of the server is made in the server room only.

CAUTION:
This equipment must be installed or serviced by trained personnel, as defined by the NEC, IEC 62368-1 & IEC 60950-1, the standard for Safety of Electronic Equipment within the Field of Audio/Video, Information Technology and Communication Technology. Lenovo assumes you are qualified in the servicing of equipment and trained in recognizing hazards energy levels in products. Access to the equipment is by the use of a tool, lock and key, or other means of security, and is controlled by the authority responsible for the location.

Important: Electrical grounding of the server is required for operator safety and correct system function. Proper grounding of the electrical outlet can be verified by a certified electrician.

Use the following checklist to verify that there are no potentially unsafe conditions:

1. Make sure that the power is off and the power cord is disconnected.
2. Check the power cord.
   - Make sure that the third-wire ground connector is in good condition. Use a meter to measure third-wire ground continuity for 0.1 ohm or less between the external ground pin and the frame ground.
   - Make sure that the power cord is the correct type.

     To view the power cords that are available for the server:

     a. Go to:

http://dcsc.lenovo.com/#/

b. Click **Preconfigured Model** or **Configure to order**.

c. Enter the machine type and model for your server to display the configurator page.

d. Click **Power → Power Cables** to see all line cords.

- Make sure that the insulation is not frayed or worn.

3. Check for any obvious non-Lenovo alterations. Use good judgment as to the safety of any non-Lenovo alterations.
4. Check inside the server for any obvious unsafe conditions, such as metal filings, contamination, water or other liquid, or signs of fire or smoke damage.
5. Check for worn, frayed, or pinched cables.
6. Make sure that the power-supply cover fasteners (screws or rivets) have not been removed or tampered with.

© Copyright Lenovo 2020, 2025

Chapter 1. Introduction

The ThinkSystem SR850 V2 is a 2U rack server designed for high-volume network transaction processing. This high-performance, multi-core server is ideally suited for networking environments that require superior processor performance, input/output (I/O) flexibility, and high manageability.

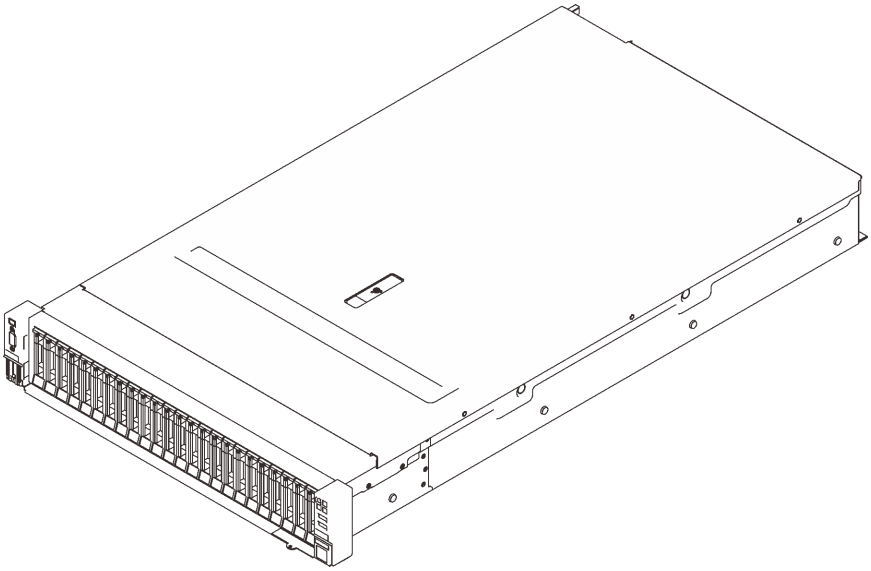

Figure 1. ThinkSystem SR850 V2

The server comes with a limited warranty. For details about the warranty, see:
https://support.lenovo.com/us/en/solutions/ht503310

For details about your specific warranty, see:
http://datacentersupport.lenovo.com/warrantylookup

In addition, the system service label on the top cover of the server provides a QR code for mobile access to service information. You can scan the QR code with a mobile device for quick access to additional information including parts installation, replacement, and error codes.

Following illustration is the QR code: https://support.lenovo.com/p/servers/sr850v2

Figure 2. QR code

© Copyright Lenovo 2020, 2025

Server package contents

When you receive your server, verify that the shipment contains everything that you expected to receive.

The server package includes the following items:

Note: Some of the items listed are available on select models only.

- The server.
- Rail installation kit (optional). Detailed instructions for installing the rail installation kit are provided in the package with the rail installation kit.
- Cable management arm or cable management bar.
- Material box, including items such as rack installation guide and accessory kit.

Features

Performance, ease of use, reliability, and expansion capabilities were key considerations in the design of your server. These design features make it possible for you to customize the system hardware to meet your needs today and provide flexible expansion capabilities for the future.

This server implements the following features and technologies:

- **Features on Demand**

  If a Features on Demand feature is integrated in the server or in an optional device that is installed in the server, you can purchase an activation key to activate the feature. For information about Features on Demand, see:

  https://fod.lenovo.com/lkms

- **Lenovo XClarity Controller (XCC)**

  The Lenovo XClarity Controller is the common management controller for Lenovo ThinkSystem server hardware. The Lenovo XClarity Controller consolidates multiple management functions in a single chip on the server system board.

  Some of the features that are unique to the Lenovo XClarity Controller are enhanced performance, higher-resolution remote video, and expanded security options. For additional information about the Lenovo XClarity Controller, refer to the XCC documentation compatible with your server at:

  https://pubs.lenovo.com/lxcc-overview/

  Important: Lenovo XClarity Controller (XCC) supported version varies by product. All versions of Lenovo XClarity Controller are referred to as Lenovo XClarity Controller and XCC in this document, unless specified otherwise. To see the XCC version supported by your server, go to https://pubs.lenovo.com/lxcc-overview/.

- **UEFI-compliant server firmware**

  Lenovo ThinkSystem firmware is Unified Extensible Firmware Interface (UEFI) compliant. UEFI replaces BIOS and defines a standard interface between the operating system, platform firmware, and external devices.

  Lenovo ThinkSystem servers are capable of booting UEFI-compliant operating systems, BIOS-based operating systems, and BIOS-based adapters as well as UEFI-compliant adapters.

  Note: The server does not support DOS (Disk Operating System).

- **Active Memory**

The Active Memory feature improves the reliability of memory through memory mirroring. Memory mirroring mode replicates and stores data on two pairs of DIMMs within two channels simultaneously. If a failure occurs, the memory controller switches from the primary pair of memory DIMMs to the backup pair of DIMMs.

- **Large system-memory capacity**

  The server supports synchronous dynamic random-access memory (SDRAM) registered dual inline memory modules (DIMMs) with error correcting code (ECC). For more information about the specific types and maximum amount of memory, see "Specifications" on page 4.

- **Integrated Trusted Platform Module (TPM)**

  This integrated security chip performs cryptographic functions and stores private and public secure keys. It provides the hardware support for the Trusted Computing Group (TCG) specification. You can download the software to support the TCG specification when the software is available.

  Note: For customers in Chinese Mainland, integrated TPM is not supported. However, customers in Chinese Mainland can install a Trusted Cryptographic Module (TCM) adapter or a Lenovo-qualified TPM adapter (sometimes called a daughter card).

- **Large data-storage capacity and hot-swap capability**

  With the hot-swap feature, you can add, remove, or replace hard disk drives without turning off the server.

- **Light path diagnostics**

  Light path diagnostics provides LEDs to help you diagnose problems. For more information about the light path diagnostics, see Light path diagnostics panel and Light path diagnostics LEDs.

- **Mobile access to Lenovo Service Information website**

  The server comes with a QR code on the system service label, which is on the cover of the server, that you can scan with a QR code reader and scanner with a mobile device to get quick access to the Lenovo Service Information website. The Lenovo Service Information website provides additional information for parts installation, replacement videos, and error codes for server support.

- **Active Energy Manager**

  Lenovo XClarity Energy Manager is a power and temperature management solution for data centers. You can monitor and manage the power consumption and temperature of Converged, NeXtScale, System x, ThinkServer and ThinkSystem servers, and improve energy efficiency with Lenovo XClarity Energy Manager.

- **Redundant networking connection**

  The Lenovo XClarity Controller provides failover capability to a redundant Ethernet connection with the applicable application installed. If a problem occurs with the primary Ethernet connection, all Ethernet traffic that is associated with the primary connection is automatically switched to the optional redundant Ethernet connection. If the applicable device drivers are installed, this switching occurs without data loss and without user intervention.

- **Redundant cooling and optional power capabilities**

  The redundant cooling by the fans in the server enables continued operation if one of the fans fails.

- **ThinkSystem RAID support**

  The ThinkSystem RAID adapter provides hardware redundant array of independent disks (RAID) support to create configurations. The standard RAID adapter provides RAID levels 0, 1, and 10. An optional RAID adapter is available for purchase.

Specifications

The following information is a summary of the features and specifications of the server. Depending on the model, some features might not be available, or some specifications might not apply.

Table 1. Specifications, Type 7D31 and 7D32

Specification	Description
Dimension	2U server • Height: 86.5 mm (3.4 inches) • Width: – With rack handles: 482 mm (19.0 inches) – Without rack handles: 434.4 mm (17.1 inches) • Depth: 880.2 mm (34.7 inches) **Note:** The depth is measured with rack handles installed, but without the security bezel.
Weight (depending on the configuration)	40 kg (88.2 lb) in maximum
Processor (depending on model)	Supports multi-core Intel Xeon processors, with integrated memory controller and Intel Mesh UPI (Ultra Path Interconnect) topology. • Two processor sockets (expandable up to four) with minimal requirement of two installed on the system board. • Designed for LGA 4189 sockets • Scalable up to 28 cores • Supports 6 UPI links at 10.4 GT/s
Memory	See "Memory module installation order" on page 121 for detailed information about memory configuration and setup. • Capacity – Minimum: 16 GB – Maximum: – RDIMM: 3 TB – 3DS-RDIMM: 6 TB • Memory module types: – Double-data-rate 4 (TruDDR4) error correcting code (ECC) 3200 MT/s registered DIMM (RDIMM) or 3DS RDIMM – Persistent Memory (PMEM) • Capacity (depending on the model): – RDIMM: 16 GB, 32 GB, and 64 GB – 3DS-RDIMM: 128 GB, 256 GB – PMEM: 128 GB, 256 GB, and 512 GB **Note:** PMEMs can be mixed with DRAM DIMMs. See "PMEM rules" on page 126 for more information. • Slots: 24 two-way interleaved slots (expandable to 48) For a list of supported memory modules, see https://serverproven.lenovo.com/.
Storage expansion	• Twenty-four 2.5-inch drive bays support SAS/SATA/NVMe drives. • Two 7mm drive bays support SAS/SATA/NVMe drives. **Notes:** When the following components are installed in the system, bay 16 to 23 are disabled, and the maximal supported drive quantity is 16. – PMEMs – 256 GB 3DS DRIMMs

Table 1. Specifications, Type 7D31 and 7D32 (continued)

Expansion slots	Up to eight slots:
	• Slot 1 to 3 (PCIe riser card 1)
	  – PCI Express 3.0 x16 (Slot 1, 2, 3)
	  – PCI Express 3.0 x8 (Slot 1, 2)
	  – PCI Express 3.0 x8 with 7mm drive cage (Slot 1, 2)
	• Slot 4 (OCP Ethernet adapter)
	• Slot 5 to 6 (PCIe riser card 2): PCI Express 3.0 x16
	Note: Enabling these two slots require four installed processors.
	• Slot 7: PCI Express 3.0 x8
	• Slot 8: PCI Express 3.0 x8

Integrated functions	• Lenovo XClarity Controller (XCC), which provides service processor control and monitoring functions, video controller, and remote keyboard, video, mouse, and remote drive capabilities.
	• One system-management RJ-45 connector on the rear to connect to a systems-management network. This connector is dedicated to the Lenovo XClarity Controller functions and runs at 1 GB speed.
	• Four universal serial bus (USB) ports:
	  – Two on the front of the server:
	  – One USB 2.0 with Lenovo XClarity Controller management
	  – One USB 3.1
	  – Two USB 3.1 on the rear of the server
	• One serial port

RAID adapter (depending on model)	The following options with support for RAID levels 0, 1, and 10 are available for this server with up to four flash power modules: • ThinkSystem 430-8i SAS/SATA 12Gb HBA • ThinkSystem 430-16i SAS/SATA 12Gb HBA • ThinkSystem 430-8e SAS/SATA 12Gb HBA • ThinkSystem 430-16e SAS/SATA 12Gb HBA • ThinkSystem RAID 530-8i PCIe 12Gb Adapter • ThinkSystem RAID 530-16i PCIe 12Gb Adapter • ThinkSystem RAID 930-8i 2GB Flash PCIe 12Gb Adapter • ThinkSystem RAID 930-16i 4GB Flash PCIe 12Gb Adapter • ThinkSystem RAID 930-8e 4GB Flash PCIe 12Gb Adapter • ThinkSystem RAID 940-8i 4GB Flash PCIe Gen4 12Gb Adapter • ThinkSystem RAID 940-8i 8GB Flash PCIe Gen4 12Gb Adapter • ThinkSystem RAID 940-16i 8GB Flash PCIe 12Gb Adapter • ThinkSystem RAID 940-32i 8GB Flash PCIe 12Gb Adapter • x16 PCIe 1610-8P adapter • ThinkSystem RAID 9350-8i 2GB Flash PCIe 12Gb Adapter • ThinkSystem RAID 9350-16i 4GB Flash PCIe 12Gb Adapter • ThinkSystem RAID 5350-8i Flash PCIe 12Gb Adapter • ThinkSystem 4350-16i SAS/SATA 12Gb HBA • ThinkSystem 4350-8i SAS/SATA 12Gb HBA
Network	OCP Ethernet adapter with 1G/10G base-T and 10G/25G/50G SPF+ For a list of supported adapters, see https://serverproven.lenovo.com/server/sr850-v2.
Fans	• Six (60 mm x 56 mm) internal system dual rotor fans (N+1 redundancy)

Table 1. Specifications, Type 7D31 and 7D32 (continued)

Operating System	Supported and certified operating systems: • Microsoft Windows Server • VMware ESXi • Red Hat Enterprise Linux • SUSE Linux Enterprise Server References: • Complete list of available operating systems: https://lenovopress.lenovo.com/osig. • OS deployment instructions: "Deploy the operating system" on page 182.
Electrical input	This server supports up to two units of CFF V4 power supplies with N+1 redundancy. Following is the list of supported types: • 750-watt Titanium, input power 230 Vac / 240 VDC • 1100-watt Platinum, input power 115 Vac / 230 Vac / 240 VDC • 1100-watt Titanium, input power 230 Vac / 240 VDC • 1800-watt Platinum, input power 230 Vac / 240 VDC • 1800-watt Titanium, input power 230 Vac / 240 VDC • 2400-watt Platinum, input power 230 Vac / 240 VDC • 2600-watt Titanium, input power 230 Vac / 240 VDC **CAUTION:** • **240 V dc input (input range: 180-300 V dc) is supported in Chinese Mainland ONLY.** • **Power supply with 240 V dc input cannot support hot-plugging power cord function. Before removing the power supply with dc input, please turn off server or disconnect dc power sources at the breaker panel or by turning off the power source. Then, remove the power cord.**
Minimal configuration for debugging	• Two processors in processor socket 1 and 2 • Two DRAM DIMMs in slot 8 and 20 • One power supply • One drive with RAID adapter and backplane (If OS is needed for debugging) • Six system fans (fan 1 to fan 6)

Table 1. Specifications, Type 7D31 and 7D32 (continued)

Acoustical noise emissions	The server has the following acoustic noise emissions declaration: • Sound power level (L_{WAd}) – Idling: – Typical: 6.2 Bel – GPU: 6.9 Bel – Storage rich: 6.6 Bel – Operating: – Typical: 7.4 Bel – GPU: 8.2 Bel – Storage rich: 7.5 Bel • Sound pressure level (L_{pAm}): – Idling: – Typical: 46 dBA – GPU: 53 dBA – Storage rich: 50 dBA – Operating: – Typical: 58 dBA – GPU: 67 dBA – Storage rich: 60 dBA **Notes:** • These sound levels were measured in controlled acoustical environments according to procedures specified by ISO7779 and are reported in accordance with ISO 9296. • The declared acoustic sound levels are based on the specified configurations, which may change slightly depending on configuration/conditions. – Typical configuration: four 205W processors, twenty-four 64 GB DIMMs, eight SAS hard disk drives, 930-8i, Intel X710-DA2 PCIe 10Gb 2-Port, Intel X550-T2 Dual Port 10GBase-T, two 1800-watt power supply units – GPU configuration: four 165W processors, twenty-four 64 GB DIMMs, sixteen SAS hard disk drives, 940-16i, Intel X710-DA2 PCIe 10Gb 2-Port, two Nvidia Tesla T4, two 1800-watt power supply units – Storage rich configuration: four 250W processors, forty-eight 64 GB DIMMs, twenty-four SAS hard disk drives, 940-16i, 940 8i, Intel X710-DA2 PCIe 10Gb 2-Port, Intel X550-T2 Dual Port 10GBase-T, two 2400-watt power supply units • The declared acoustic noise levels may increase greatly, if high-power components are installed such as high-power NICs, high-power processors and GPUs. • Government regulations (such as those prescribed by OSHA or European Community Directives) may govern noise level exposure in the workplace and may apply to you and your server installation. The actual sound pressure levels in your installation depend upon a variety of factors, including the number of racks in the installation; the size, materials, and configuration of the room; the noise levels from other equipment; the room ambient temperature, and employee's location in relation to the equipment. Further, compliance with such government regulations depends on a variety of additional factors, including the duration of employees' exposure and whether employees wear hearing protection. Lenovo recommends that you consult with qualified experts in this field to determine whether you are in compliance with the applicable regulations.

Table 1. Specifications, Type 7D31 and 7D32 (continued)

Ambient temperature management	Adjust ambient temperature when specific components are installed: • Keep ambient temperature to 35°C or lower when one or more of the following components are installed. – Processors with 165 to 205 watts – DRAM DIMMs with capacity larger than 64 GB • Keep ambient temperature to 35°C or lower when the following components are installed in the same unit. – Processors with 205 to 250 watts – 24 drives • Keep room temperature to 30°C or lower when one or more of the following components are installed. – Processors with 205 or more watts – Intel(R) Xeon(R) Platinum 8356H (190W , 8 core) – 256 GB 3DS RDIMM – Nvidia T4 – PMEMs **Important:** To avoid throttling, follow the instructions below: – It is advised that the ambient temperature is kept 27°C or lower when PMEMs are installed. – Make sure to adopt passive Direct Attach cables when ThinkSystem NVIDIA ConnectX-7 adapter is installed.
Environment	ThinkSystem SR850 V2 complies with ASHRAE Class A2 specifications. Depending on the hardware configuration, some models comply with ASHRAE Class A3 and Class A4 specifications. System performance may be impacted when operating temperature is outside AHSARE A2 specification. • Air temperature: – Operating – ASHARE Class A2: 10°C to 35°C (50°F to 95°F); the maximum ambient temperature decreases by 1°C for every 300 m (984 ft) increase in altitude above 900 m (2,953 ft). – ASHARE Class A3: 5°C to 40°C (41°F to 104°F); the maximum ambient temperature decreases by 1°C for every 175 m (574 ft) increase in altitude above 900 m (2,953 ft). – ASHARE Class A4: 5°C to 45°C (41°F to 113°F); the maximum ambient temperature decreases by 1°C for every 125 m (410 ft) increase in altitude above 900 m (2,953 ft). – Server off: 5°C to 45°C (41°F to 113°F) – Shipment/storage: -40°C to 60°C (-40°F to 140°F) • Maximum altitude: 3,050 m (10,000 ft) • Relative Humidity (non-condensing): – Operating – ASHRAE Class A2: 8% to 80%; maximum dew point: 21°C (70°F) – ASHRAE Class A3: 8% to 85%; maximum dew point: 24°C (75°F) – ASHRAE Class A4: 8% to 90%; maximum dew point: 24°C (75°F) – Shipment/storage: 8% to 90% • Particulate contamination **Attention:** Airborne particulates and reactive gases acting alone or in combination with other environmental factors such as humidity or temperature might pose a risk to the server. For information about the limits for particulates and gases, see “Particulate contamination” in *ThinkSystem SR850 V2 Maintenance Manual*.

Table 1. Specifications, Type 7D31 and 7D32 (continued)

	Note: The server is designed for standard data center environment and recommended to be placed in industrial data center.

Particulate contamination

Attention: Airborne particulates (including metal flakes or particles) and reactive gases acting alone or in combination with other environmental factors such as humidity or temperature might pose a risk to the device that is described in this document.

Risks that are posed by the presence of excessive particulate levels or concentrations of harmful gases include damage that might cause the device to malfunction or cease functioning altogether. This specification sets forth limits for particulates and gases that are intended to avoid such damage. The limits must not be viewed or used as definitive limits, because numerous other factors, such as temperature or moisture content of the air, can influence the impact of particulates or environmental corrosives and gaseous contaminant transfer. In the absence of specific limits that are set forth in this document, you must implement practices that maintain particulate and gas levels that are consistent with the protection of human health and safety. If Lenovo determines that the levels of particulates or gases in your environment have caused damage to the device, Lenovo may condition provision of repair or replacement of devices or parts on implementation of appropriate remedial measures to mitigate such environmental contamination. Implementation of such remedial measures is a customer responsibility.

Table 2. Limits for particulates and gases

Contaminant	Limits
Reactive gases	Severity level G1 as per ANSI/ISA 71.04-1985[1]: • The copper reactivity level shall be less than 200 Angstroms per month (Å/month ≈ 0.0035 µg/cm^2-hour weight gain).[2] • The silver reactivity level shall be less than 200 Angstroms per month (Å/month ≈ 0.0035 µg/cm^2-hour weight gain).[3] • The reactive monitoring of gaseous corrosivity must be conducted approximately 5 cm (2 in.) in front of the rack on the air inlet side at one-quarter and three-quarter frame height off the floor or where the air velocity is much higher.
Airborne particulates	Data centers must meet the cleanliness level of ISO 14644-1 class 8. For data centers without airside economizer, the ISO 14644-1 class 8 cleanliness might be met by choosing one of the following filtration methods: • The room air might be continuously filtered with MERV 8 filters. • Air entering a data center might be filtered with MERV 11 or preferably MERV 13 filters. For data centers with airside economizers, the choice of filters to achieve ISO class 8 cleanliness depends on the specific conditions present at that data center. • The deliquescent relative humidity of the particulate contamination should be more than 60% RH.[4] • Data centers must be free of zinc whiskers.[5]

[1] ANSI/ISA-71.04-1985. *Environmental conditions for process measurement and control systems: Airborne contaminants*. Instrument Society of America, Research Triangle Park, North Carolina, U.S.A.

[2] The derivation of the equivalence between the rate of copper corrosion growth in the thickness of the corrosion product in Å/month and the rate of weight gain assumes that Cu_2S and Cu_2O grow in equal proportions.

[3] The derivation of the equivalence between the rate of silver corrosion growth in the thickness of the corrosion product in Å/month and the rate of weight gain assumes that Ag_2S is the only corrosion product.

[4] The deliquescent relative humidity of particulate contamination is the relative humidity at which the dust absorbs enough water to become wet and promote ionic conduction.

[5] Surface debris is randomly collected from 10 areas of the data center on a 1.5 cm diameter disk of sticky electrically conductive tape on a metal stub. If examination of the sticky tape in a scanning electron microscope reveals no zinc whiskers, the data center is considered free of zinc whiskers.

Management options

The XClarity portfolio and other system management options described in this section are available to help you manage the servers more conveniently and efficiently.

Overview

Options	Description
Lenovo XClarity Controller	Baseboard management controller. (BMC) Consolidates the service processor functionality, Super I/O, video controller, and remote presence capabilities into a single chip on the server system board. **Interface** • CLI application • Web GUI interface • Mobile application • REST API **Usage and downloads** https://pubs.lenovo.com/lxcc-overview/
Lenovo XClarity Administrator	Centralized interface for multi-server management. **Interface** • Web GUI interface • Mobile application • REST API **Usage and downloads** http://sysmgt.lenovofiles.com/help/topic/com.lenovo.lxca.doc/aug_product_page.html
Lenovo XClarity Essentials toolset	Portable and light toolset for server configuration, data collection, and firmware updates. Suitable both for single-server or multi-server management contexts. **Interface** • **OneCLI**: CLI application • **Bootable Media Creator**: CLI application, GUI application • **UpdateXpress**: GUI application **Usage and downloads** https://pubs.lenovo.com/lxce-overview/

Options	Description
Lenovo XClarity Provisioning Manager	UEFI-based embedded GUI tool on a single server that can simplify management tasks. **Interface** • Web interface (BMC remote access) • GUI application **Usage and downloads** https://pubs.lenovo.com/lxpm-overview/ **Important:** Lenovo XClarity Provisioning Manager (LXPM) supported version varies by product. All versions of Lenovo XClarity Provisioning Manager are referred to as Lenovo XClarity Provisioning Manager and LXPM in this document, unless specified otherwise. To see the LXPM version supported by your server, go to https://pubs.lenovo.com/lxpm-overview/.
Lenovo XClarity Integrator	Series of applications that integrate the management and monitoring functionalities of the Lenovo physical servers with the software used in a certain deployment infrastructure, such as VMware vCenter, Microsoft Admin Center, or Microsoft System Center while delivering additional workload resiliency. **Interface** GUI application **Usage and downloads** https://pubs.lenovo.com/lxci-overview/
Lenovo XClarity Energy Manager	Application that can manage and monitor server power and temperature. **Interface** • Web GUI Interface **Usage and downloads** https://datacentersupport.lenovo.com/solutions/lnvo-lxem
Lenovo Capacity Planner	Application that supports power consumption planning for a server or rack. **Interface** • Web GUI Interface **Usage and downloads** https://datacentersupport.lenovo.com/solutions/lnvo-lcp

Functions

Options		Functions							
		Multi-system mgmt	OS deploy-ment	System configu-ration	Firm-ware up-dates[1]	Event-s/alert moni-toring	Inven-tory/ logs	Pow-er mgmt	Power planning
Lenovo XClarity Controller				√	√[2]	√	√[4]		
Lenovo XClarity Administrator		√	√	√	√[2]	√	√[4]		
Lenovo XClarity Essen-tials toolset	OneCLI	√		√	√[2]	√	√[4]		
	Bootable Media Creator			√	√[2]		√[4]		
	UpdateXpress			√	√[2]				
Lenovo XClarity Provisioning Manager			√	√	√[3]		√[5]		
Lenovo XClarity Integrator		√	√[6]	√	√	√	√	√[7]	
Lenovo XClarity Energy Manager		√				√		√	
Lenovo Capacity Planner									√[8]

Notes:

1. Most options can be updated through the Lenovo tools. Some options, such as GPU firmware or Omni-Path firmware require the use of supplier tools.
2. The server UEFI settings for option ROM must be set to **Auto** or **UEFI** to update firmware using Lenovo XClarity Administrator, Lenovo XClarity Essentials, or Lenovo XClarity Controller.
3. Firmware updates are limited to Lenovo XClarity Provisioning Manager, Lenovo XClarity Controller, and UEFI updates only. Firmware updates for optional devices, such as adapters, are not supported.
4. The server UEFI settings for option ROM must be set to **Auto** or **UEFI** for detailed adapter card information, such as model name and firmware levels, to be displayed in Lenovo XClarity Administrator, Lenovo XClarity Controller, or Lenovo XClarity Essentials.
5. Limited inventory.
6. The Lenovo XClarity Integrator deployment check for System Center Configuration Manager (SCCM) supports Windows operating system deployment.
7. Power management function is supported only by Lenovo XClarity Integrator for VMware vCenter.
8. It is highly recommended that you check the power summary data for your server using Lenovo Capacity Planner before purchasing any new parts.

Chapter 2. Server components

This section contains information about each of the components associated with the server.

Identifying your server

When you contact Lenovo for help, the machine type, model, and serial number information helps support technicians to identify your server and provide faster service.

Figure 3 “Location of the machine type, model, and serial number” on page 15 shows the location of the label containing the machine type, model, and serial number.

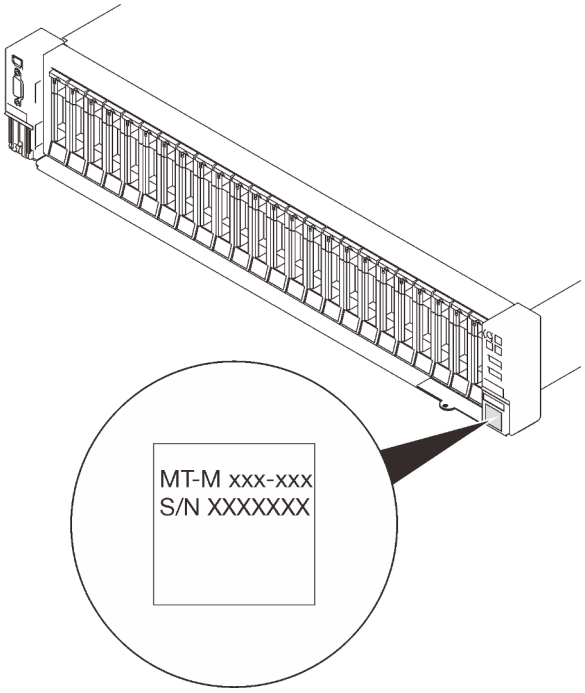

Figure 3. Location of the machine type, model, and serial number

The model number and serial number are on the ID label on the front of the server, as shown in the following illustrations. You can also add other system information labels to the front of the server in the customer label spaces.

XClarity Controller network access label

In addition, the XClarity Controller network access label is attached to the pull-out information tab located near the lower right corner of the front view, with MAC address accessible with a pull.

© Copyright Lenovo 2020, 2025

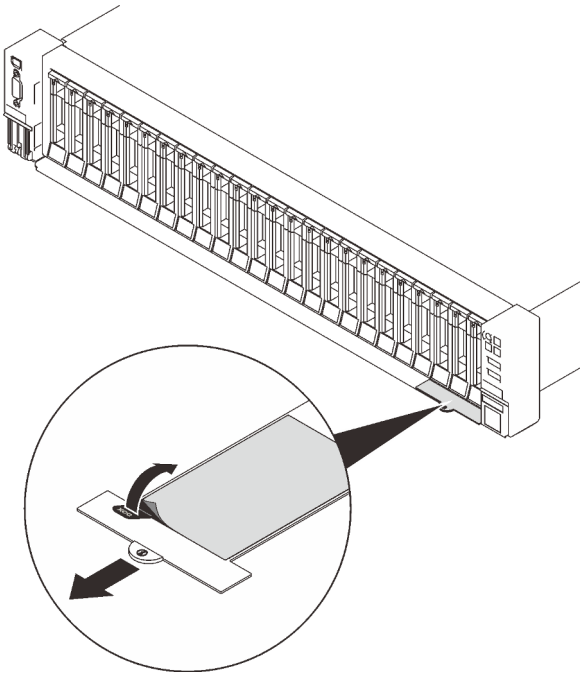

Figure 4. XClarity Controller network access label on the pull-out information tab

Front view

This section contains information about the controls, LEDs, and connectors on the front of the server.

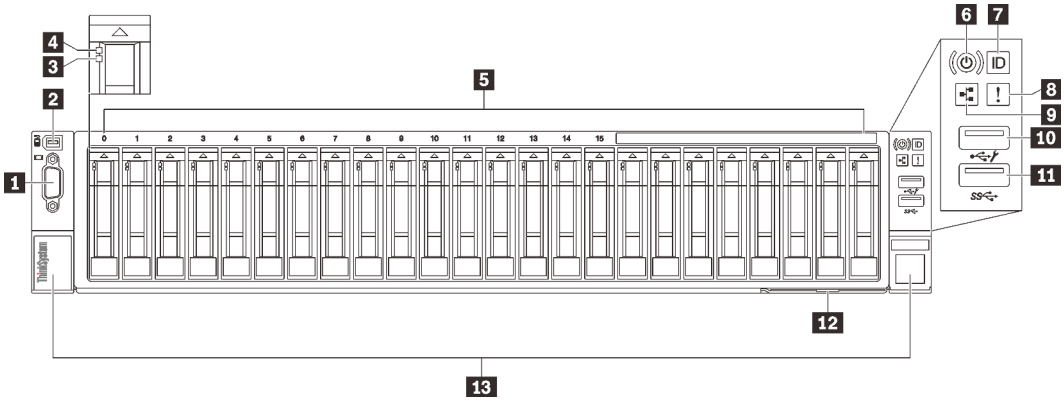

Figure 5. Front view

Table 3. Components on the front view

1	"VGA connector (optional)" on page 17	8	"System error LED (yellow)" on page 18
2	"External LCD diagnostics handset connector" on page 17	9	"Network activity LED (green)" on page 18
3	"Drive status LED (yellow)" on page 17	10	"USB 1" on page 18 (USB 2.0 with Lenovo XClarity Controller management)
4	"Drive activity LED (green)" on page 18	11	"USB 2" on page 18 (USB 3.1)
5	"2.5-inch drive bays" on page 18	12	"Pull-out information tab" on page 18
6	"Power button/LED (green)" on page 18	13	"Rack release latches" on page 19
7	"Identification button/LED (blue)" on page 18		

1 VGA connector (optional)

Connect a monitor to this connector.

Notes:

- When the optional front VGA connector is in use, the rear one will be disabled.
- The maximum video resolution is 1920 x 1200 at 60 Hz.

2 External LCD diagnostics handset connector

Connect the external LCD diagnostics handset here. See "External LCD diagnostics handset" on page 19 for more details.

3 Drive status LED (yellow)

These LEDs indicate the following status:

- The LED is lit: the drive has failed.
- The LED is flashing slowly (once per second): the drive is being rebuilt.
- The LED is flashing rapidly (three times per second): the drive is being identified.

4 Drive activity LED (green)

Each hot-swap drive comes with an activity LED. When this LED is flashing, it indicates that the drive is in use.

5 2.5-inch drive bays

Install 2.5-inch drives to these bays. See "Install a 2.5-inch hot-swap drive" on page 132 for more details.

6 Power button/LED (green)

7 Identification button/LED (blue)

Use this blue LED to visually locate the server among other servers. This LED is also used as a presence detection button. You can use Lenovo XClarity Administrator to light this LED remotely.

8 System error LED (yellow)

When this yellow LED is lit, it indicates that a system error has occurred. This LED can be controlled by the XCC. Information provided from the LCD display of the External LCD diagnostics handset could also help isolate an error.

9 Network activity LED (green)

When this LED is lit, it indicates that the server is transmitting to or receiving signals from the Ethernet LAN.

10 11 USB connectors

Connect a USB device, such as a mouse, keyboard, or other devices, to either of these connectors. Following are detailed descriptions of each connector:

- USB 1: USB 2.0 with Lenovo XClarity Controller management.

  Connection to XClarity Controller is primarily intended for users with a mobile device running the XClarity Controller mobile application. When a mobile device is connected to this USB port, an Ethernet over USB connection is established between the mobile application running on the device and the XClarity Controller.

  Select **Network** in **BMC Configuration** to view or modify settings.

  Four types of settings are available:

  - **Host only mode**

    In this mode, the USB port is always solely connected to the server.
  - **BMC only mode**

    In this mode, the USB port is always solely connected to XClarity Controller.
  - **Shared mode: owned by BMC**

    In this mode, connection to the USB port is shared by the server and XClarity Controller, while the port is switched to XClarity Controller.
  - **Shared mode: owned by host**

    In this mode, connection to the USB port is shared by the server and XClarity Controller, while the port is switched to the server.
- USB 2: USB 3.1.

12 Pull-out information tab

This tab contains network information such as MAC address and XCC network access label.

13 Rack release latches

Press on the latch on both sides to disengage the server from the rack and slide it out.

External LCD diagnostics handset

The external LCD diagnostics handset is an external device that is connected to the server with a cable, and it allows quick access to system information such as errors, system status, firmware, network, and health information.

Location of the external LCD diagnostics handset

Location	Callouts
The external LCD diagnostics handset is connected to the server with an external cable. 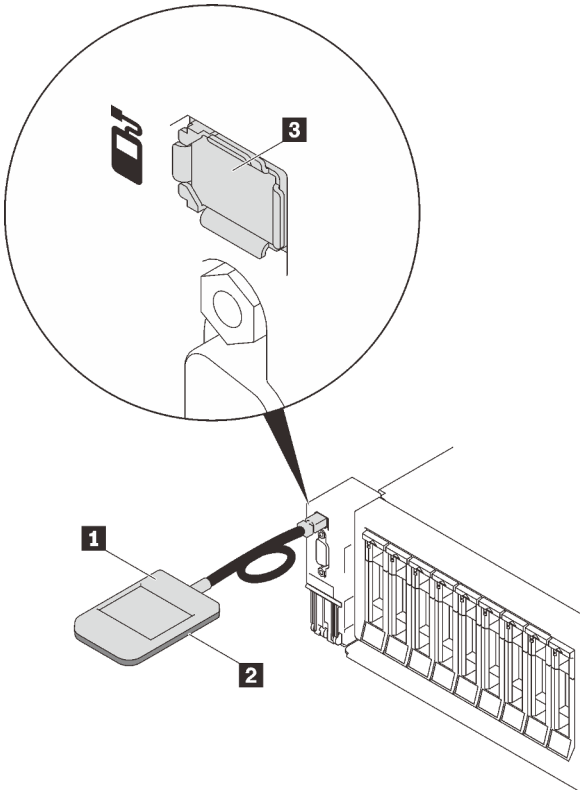 	1 External LCD diagnostics handset 2 Magnetic bottom With this component, the diagnostic handset can be attached to the top or side of the rack with hands spared for service tasks. 3 External diagnostics connector This connector is located on the front of the server, and is used to connect an external LCD diagnostics handset.

Note: When unplugging the external handset, see the following instructions:

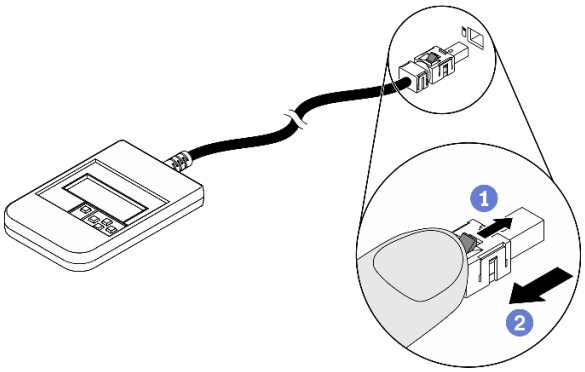

1. Press the plastic clip on the plug forward.
2. Hold the clip and remove the cable from the connector.

Display panel overview

The diagnostics device consists of an LCD display and 5 navigation buttons.

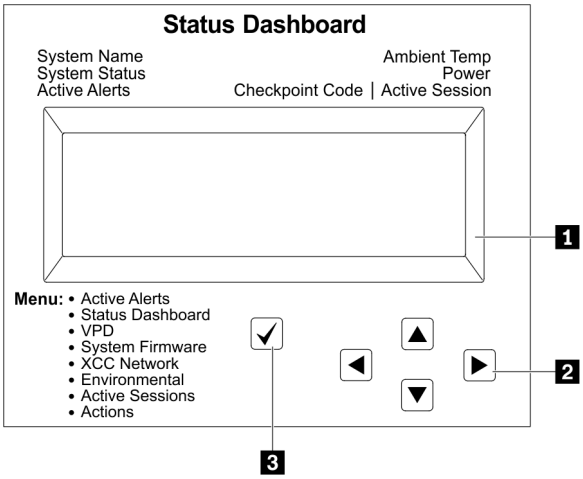

	1 LCD display
	2 Scroll buttons (up/down/left/right) Press the scroll buttons to locate and select system information.
	3 Select button Press the select button to select from the options in the menu.

Option flow diagram

The LCD panel displays various system information. Navigate through the options with the scroll keys.

Depending on the model, the options and entries on the LCD display might be different.

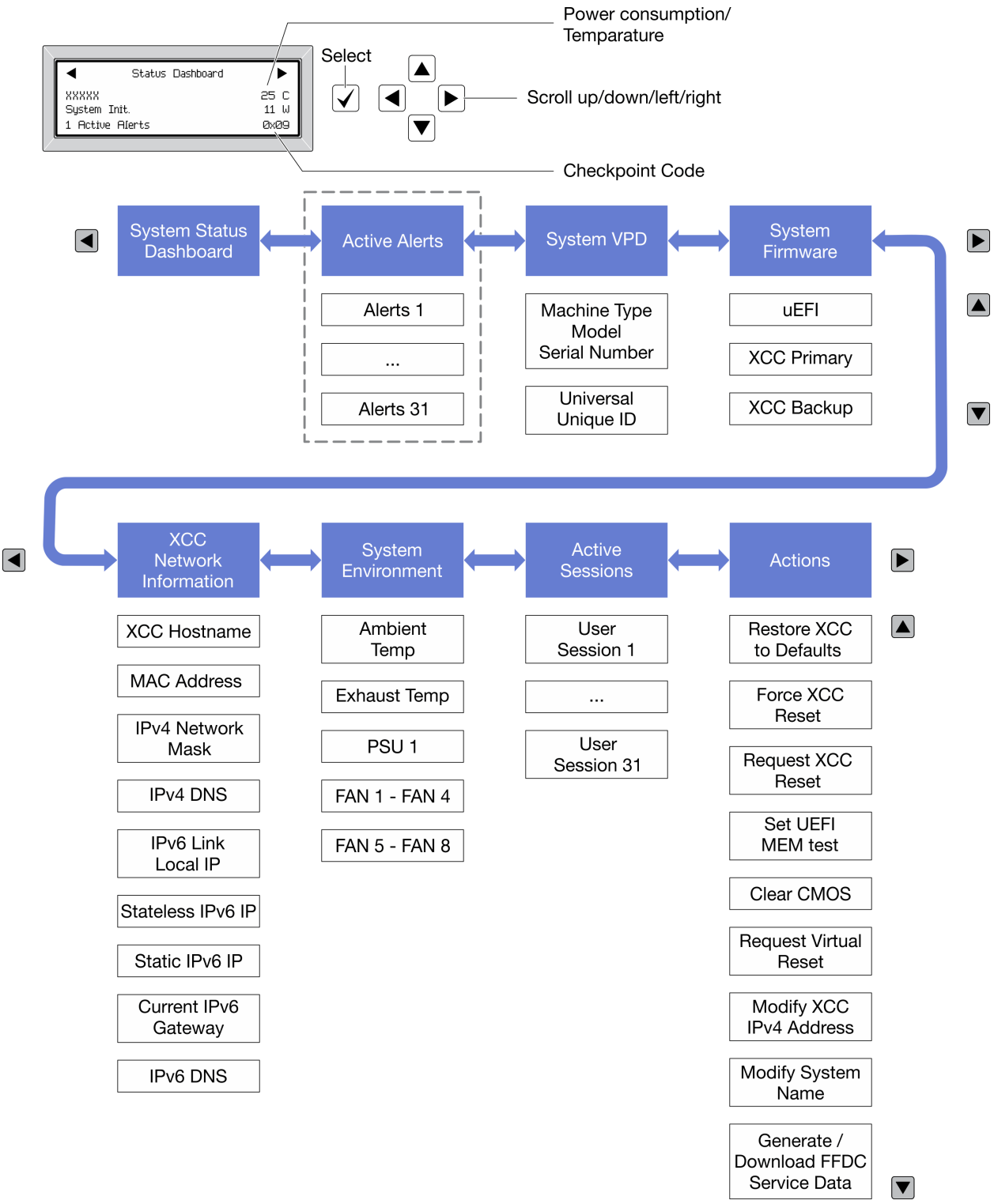

Full menu list

Following is the list of available options. Switch between an option and the subordinate information entries with the select button, and switch among options or information entries with the scroll buttons.

Depending on the model, the options and entries on the LCD display might be different.

Home Menu (System Status Dashboard)

Home Menu	Example
1 System name 2 System status 3 Active alert quantity 4 Temperature 5 Power consumption 6 Checkpoint code	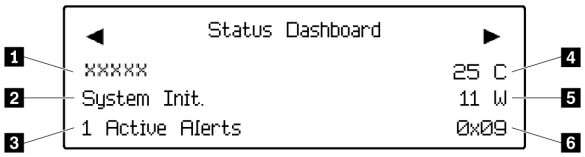

Active Alerts

Sub Menu	Example
Home screen: Active error quantity **Note:** The “Active Alerts” menu displays only the quantity of active errors. If no errors occur, the “Active Alerts” menu will not be available during navigation.	1 Active Alerts
Details screen: • Error message ID (Type: Error/Warning/Information) • Occurrence time • Possible sources of the error	Active Alerts: 1 Press ▼ to view alert details FQXSPPU009N(Error) 04/07/2020 02:37:39 PM CPU 1 Status: Configuration Error

System VPD Information

Sub Menu	Example
• Machine type and serial number • Universal Unique ID (UUID)	Machine Type: xxxx Serial Num: xxxxxx Universal Unique ID: xxxxxxxxxxxxxxxxxxxxxxxxxxxx

System Firmware

Sub Menu	Example
UEFI • Firmware level (status) • Build ID • Version number • Release date	UEFI (Inactive) Build: D0E101P Version: 1.00 Date: 2019-12-26
XCC Primary • Firmware level (status) • Build ID • Version number • Release date	XCC Primary (Active) Build: DVI399T Version: 4.07 Date: 2020-04-07
XCC Backup • Firmware level (status) • Build ID • Version number • Release date	XCC Backup (Active) Build: D8BT05I Version: 1.00 Date: 2019-12-30

XCC Network Information

Sub Menu	Example
• XCC hostname • MAC address • IPv4 Network Mask • IPv4 DNS • IPv6 Link Local IP • Stateless IPv6 IP • Static IPv6 IP • Current IPv6 Gateway • IPv6 DNS **Note:** Only the MAC address that is currently in use is displayed (extension or shared).	XCC Network Information XCC Hostname: XCC-xxxx-SN MAC Address: xx:xx:xx:xx:xx:xx IPv4 IP: xx.xx.xx.xx IPv4 Network Mask: x.x.x.x IPv4 Default Gateway: x.x.x.x

System Environmental Information

Sub Menu	Example
• Ambient temperature • Exhaust temperature • PSU status • Spinning speed of fans by RPM	Ambient Temp: 24 C Exhaust Temp: 30 C PSU1: Vin= 213 w Inlet= 26 C FAN1 Front: 21000 RPM FAN2 Front: 21000 RPM FAN3 Front: 21000 RPM FAN4 Front: 21000 RPM

Active Sessions

Sub Menu	Example
Quantity of active sessions	Active User Sessions: 1

Actions

Sub Menu	Example
Several quick actions are available: • Restore XCC to Defaults • Force XCC Reset • Request XCC Reset • Set UEFI Memory Test • Clear CMOS • Request Virtual Reseat • Modify XCC Static IPv4 Address/Net mask/Gateway • Modify System Name • Generate/Download FFDC Service Data	Request XCC Reset? This will request the BMC to reboot itself. Hold √ for 3 seconds

Rear view

This section contains information about the LEDs and connectors on the rear of the server.

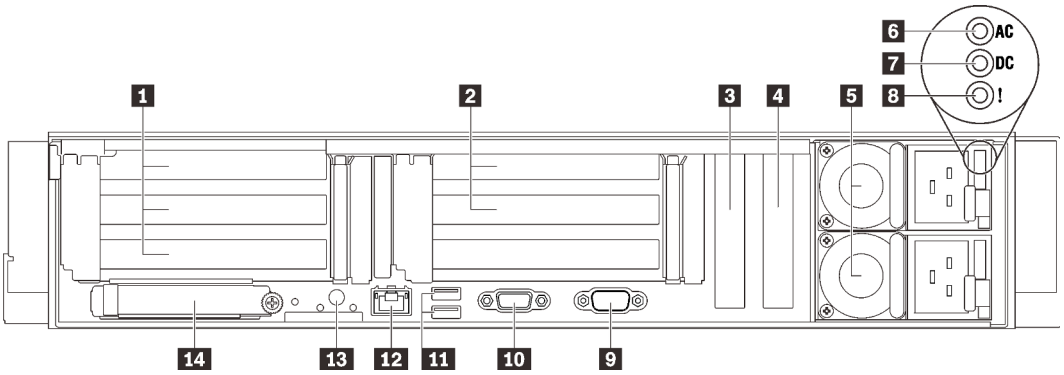

Figure 6. Rear view

Table 4. Components on the rear view

1	"PCIe slot 1-3 (Riser 1)" on page 26	8	"Power supply error LED (yellow)" on page 27
2	"PCIe slot 5-6 (Riser 2)" on page 26	9	"Serial connector" on page 27
3	"PCI Express 3.0 x8" on page 26 (PCIe slot 7)	10	"VGA connector" on page 27
4	"PCI Express 3.0 x8" on page 26 (PCIe slot 8)	11	"USB 3.1 connectors" on page 27
5	"Power supply units" on page 27	12	"XClarity Controller network connector" on page 27
6	"AC power LED (green)" on page 27	13	"NMI button" on page 27
7	"DC power LED (green)" on page 27	14	"OCP 3.0 Ethernet adapter" on page 28

1 Riser 1 (PCIe slot 1-3)

Install a PCIe riser card into this zone. See the following table for PCIe slots corresponding to the supported riser cards.

Table 5. Riser 1 PCIe slots

Slot	**x16/x16/x16 riser card**	**x16/x16 (x8 lanes) riser card** (without 7mm drive cage)	**x16/x16 (x8 lanes) riser card** (with 7mm drive cage)
1	x16	x16 (x8 lane)	x16 (x8 lane)
2	x16	x16 (x8 lane)	x16 (x8 lane)
3	x16	NA	7mm drive cage

2 Riser 2 (PCIe slot 5-6)

Install x16/x16 FH/HL PCIe Riser into this zone.

Table 6. Riser 2 PCIe slots

Slot	**x16/x16 PCIe riser card**
5	x16
6	x16

3 4 PCI Express 3.0 (x8)

Install adapters, particularly RAID adapters, to these slots.

5 Power supply units

Install power supply units to these bays, connect them to power cords. Make sure the power cords are connected properly. Following are the power supplies supported by this system:

- 750-watt Titanium, input power 230 Vac / 240 VDC
- 1100-watt Platinum, input power 115 Vac / 230 Vac / 240 VDC
- 1100-watt Titanium, input power 230 Vac / 240 VDC
- 1800-watt Platinum, input power 230 Vac / 240 VDC
- 1800-watt Titanium, input power 230 Vac / 240 VDC
- 2400-watt Platinum, input power 230 Vac / 240 VDC
- 2600-watt Titanium, input power 230 Vac / 240 VDC

6 AC power LED (green)

Each hot-swap power supply unit comes with one AC and one DC power LED. When the AC power LED is lit, it indicates that sufficient power is being supplied to the power supply through the power cord. During normal operation, both the AC and DC power LEDs are lit.

7 DC power LED (green)

Each hot-swap power supply unit comes with one AC and one DC power LED. When the DC power LED is lit, it indicates that the power supply is supplying adequate dc power to the system. During normal operation, both the AC and dc power LEDs are lit.

8 Power supply error LED (yellow)

When the power supply error LED is lit, it indicates that the power supply has failed.

9 Serial connector

Connect a 9-pin serial device to this connector. The serial port is shared with XCC. XCC can take control of the shared serial port to redirect serial traffic, using Serial over LAN (SOL).

10 VGA connector

Connect a monitor to this connector.

Notes:

- When the optional front VGA connector is in use, the rear one will be disabled.
- The maximum video resolution is 1920 x 1200 at 60 Hz.

11 USB 3.1 connectors

Connect a USB device, such as a mouse, keyboard, or other devices, to either of these connectors.

12 XClarity Controller network connector

Use this connector to manage the server, by using a dedicated management network. If you use this connector, the Lenovo XClarity Controller cannot be accessed directly from the production network. A dedicated management network provides additional security by physically separating the management network traffic from the production network. You can use the Setup utility to configure the server to use a dedicated systems-management network or a shared network.

13 NMI button

Press this button to force a nonmaskable interrupt to the processor. You might have to use a pen or the end of a straightened paper clip to press the button. You can also use it to force a blue-screen memory dump. Use this button only when you are directed to do so by Lenovo Support.

14 OCP 3.0 Ethernet adapter

The OCP 3.0 Ethernet adapter provides two or four extra Ethernet connectors for network connections. One of the Ethernet connectors on the OCP 3.0 Ethernet adapter can also function as a management connector with shared management capacity. If the shared management connector fails, traffic can automatically switch over to another connector on the adapter.

The system may support a 2-port or a 4-port OCP module for network connections. Port numbering are shown in the illustrations below.

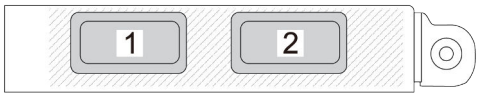

Figure 7. Port numbering — 2-port OCP module

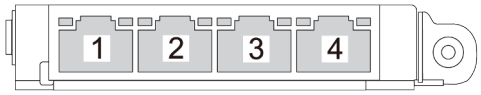

Figure 8. Port numbering — 4-port OCP 3.0 module

Identifying connectors

See this section to locate and identify the connectors on the electric boards.

System board connectors

See this section to identify the connectors on the system board.

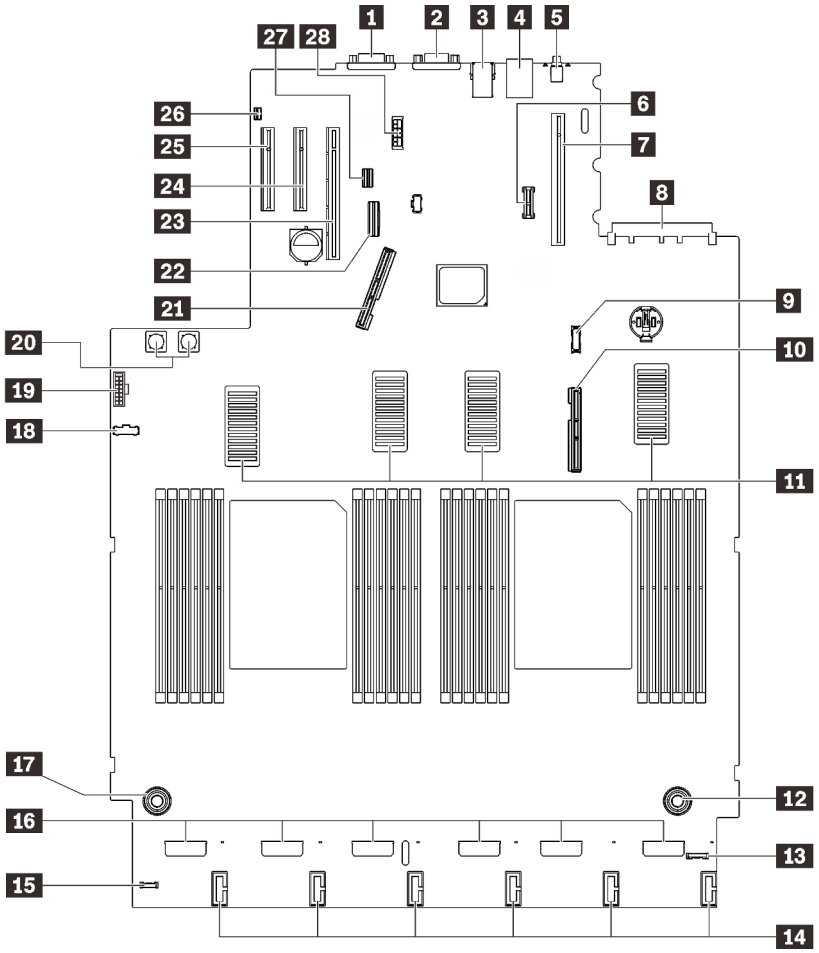

Figure 9. System board connectors

Table 7. System board connectors

1 Serial connector	15 External LCD diagnostics handset connector
2 VGA connector	16 Fan connectors
3 Two USB 3.1	17 Processor and memory expansion tray power connector
4 XClarity Controllernetwork connector	18 Power backplane sideband connector
5 NMI button	19 Front VGA connector
6 TCM/TPM module	20 Power backplane power connector
7 PCIe riser connector (PCIe slot 1 to 3)	21 PCIe signal connector 1
8 OCP connector (PCIe slot 4)	22 On-board SATA connector
9 USB front panel module connector	23 PCIe riser connector (PCIe slot 5 to 6)
10 PCIe signal connector 2	24 PCIe slot 7 (x8)
11 UPI connectors	25 PCIe slot 8 (x8)

Table 7. System board connectors (continued)

12 Processor and memory expansion tray power connector	26 Intrusion switch connector
13 Front I/O connector	27 7mm drive signal connector
14 Drive backplane power connectors	28 7mm drive power connector

Processor and memory expansion tray connectors

See this section to locate the connectors on the processor and memory expansion tray.

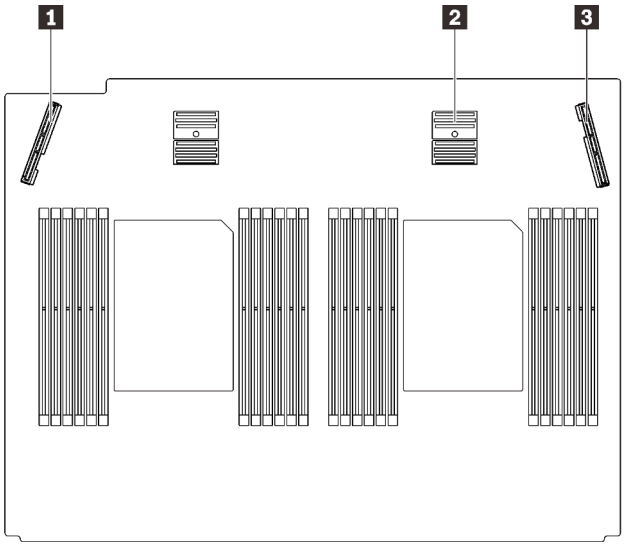

Figure 10. Processor and memory expansion tray connectors

Table 8. Processor and memory expansion tray connectors

1 PCIe signal connector 3	3 PCIe signal connector 6
2 PCIe signal connector 5	

Power backplane connectors

See this section to locate the connectors on the power backplane.

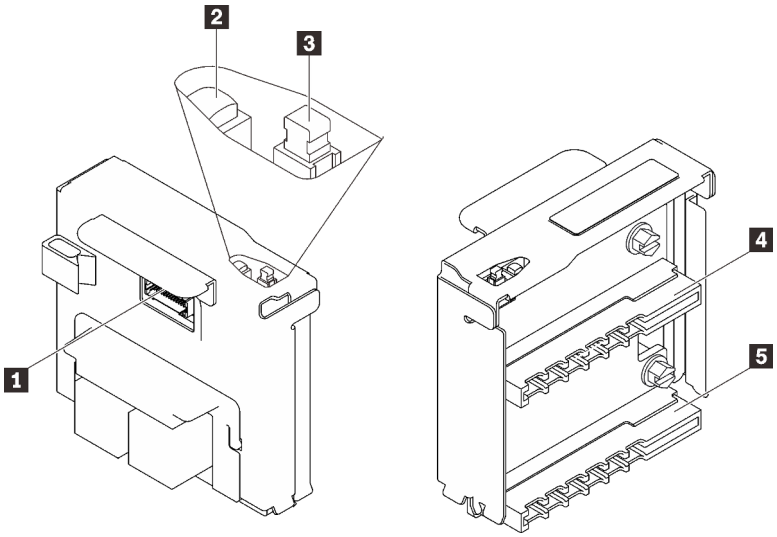

Figure 11. Power backplane components

Table 9. Power backplane components

1 Power backplane sideband connector	4 Power supply unit 2 connector
2 Power LED	5 Power supply unit 1 connector
3 Power switch	

2.5-inch 8-bay drive backplane connectors

See this section to locate the connectors in the 2.5-inch 8-bay drive backplanes.

Two types of 2.5-inch 8-bay drive backplanes are supported in this system:

- "SAS/SATA drive backplane" on page 34
- "AnyBay/NVMe drive backplane" on page 35

SAS/SATA drive backplane

See this section to locate the connectors on the SAS/SATA drive backplanes.

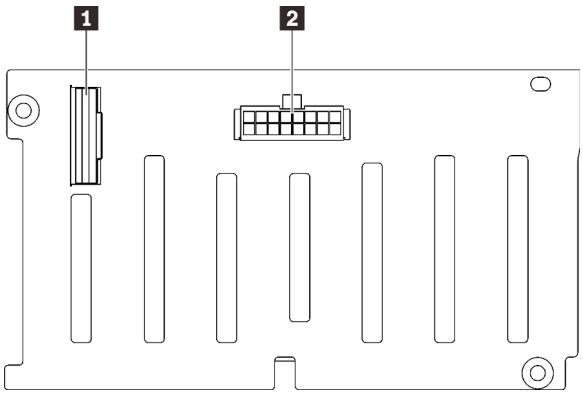

1 SAS/SATA signal connector

2 Backplane power/configuration connector

Figure 12. SAS/SATA drive backplane connectors

AnyBay/NVMe drive backplane

See this section to locate the connectors on the AnyBay/NVMe drive backplanes.

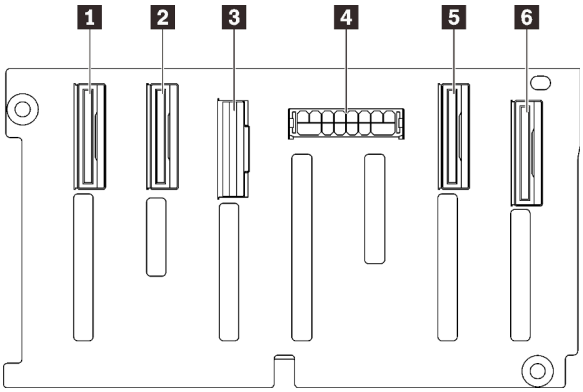

1 NVMe signal connector (6-7)
2 NVMe signal connector (4-5)
3 SAS/SATA signal connector
4 Backplane power/configuration connector
5 NVMe signal connector (2-3)
6 NVMe signal connector (0-1)

Figure 13. AnyBay/NVMe drive backplane connectors

PCIe riser card connectors

See this section to locate the connectors on the PCIe riser cards.

Two zones are available for PCIe riser cards:

- Zone 1 (Slot 1 to 3) is available for:
  - "x16/x16 (x8 lanes) PCIe riser card" on page 36
  - "x16/x16/x16 PCIe riser card" on page 37
- Zone 2 (Slot 5 to 6) is available for "x16/x16 PCIe riser card" on page 38.

x16/x16 (x8 lanes) PCIe riser card

See this section to locate the connectors on the x16/x16 (x8 lanes) PCIe riser card.

Note: This card is applied to both "x16/x16 (x8 lanes) FH/HL PCIe riser" on page 111 and "x16/x16 (x8 lanes) FH/HL PCIe riser with 7mm drive cage bracket" on page 112.

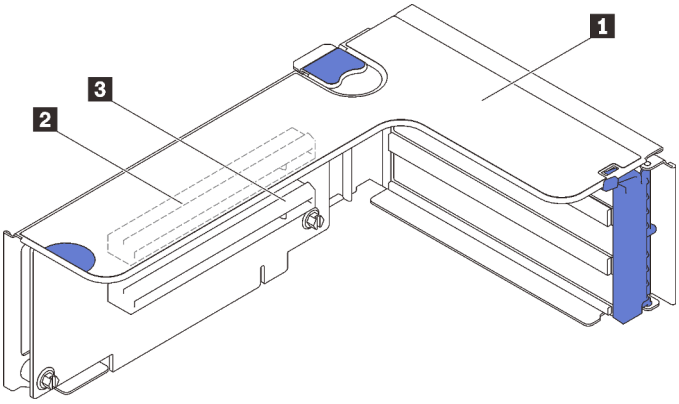

Figure 14. x16/x16 (x8 lanes) PCIe riser card connectors

Table 10. x16/x16 (x8 lanes) PCIe riser card connectors

1 PCIe full-height riser	3 PCI Express 3.0 x16 (x8 lane) (Slot 2)
2 PCI Express 3.0 x16 (x8 lane) (Slot 1)	

x16/x16/x16 PCIe riser card

See this section to locate the connectors on the x16/x16/x16 PCIe riser card.

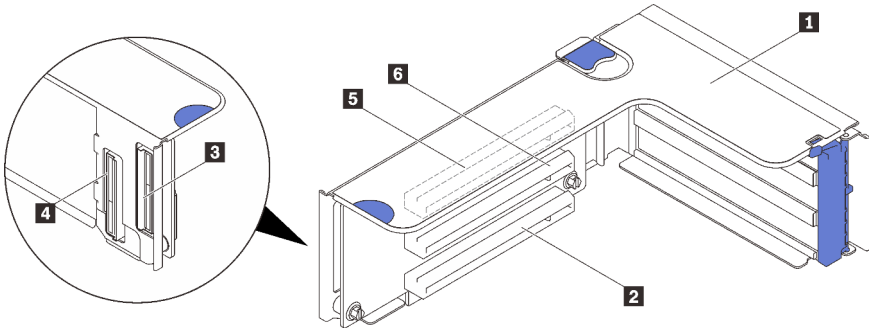

Figure 15. x16/x16/x16 PCIe riser card connectors

1 PCIe full-height riser	4 PCIe cable connector
2 PCI Express 3.0 x16 (Slot 3)	5 PCI Express 3.0 x16 (Slot 1)
3 PCIe cable connector	6 PCI Express 3.0 x16 (Slot 2)

x16/x16 PCIe riser card

See this section to locate the connectors on the x16/x16 PCIe riser card.

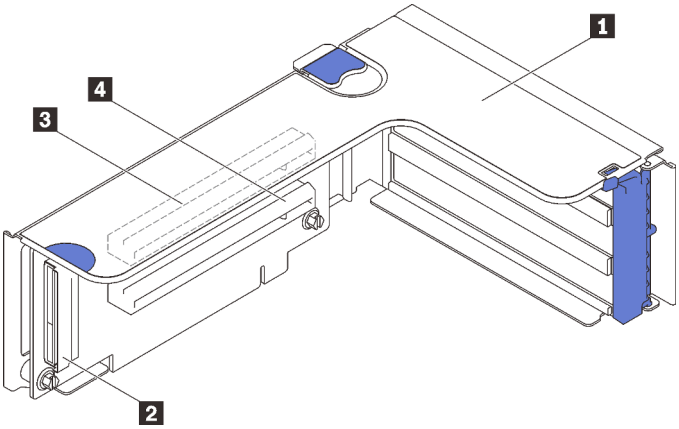

Figure 16. x16/x16 PCIe riser card connectors

1 PCIe full-height riser	3 PCI Express 3.0 x16 (Slot 5)
2 PCIe cable connector	4 PCI Express 3.0 x16 (Slot 6)

Parts list

Identify each of the components that is available for your server with the parts list.

For more information about ordering the parts shown in Figure 17 “Server components” on page 39:

1. Go to **http://datacentersupport.lenovo.com** and navigate to the support page for your server.
2. Click **Parts & Accessories → Parts Lookup**.
3. Enter either the serial number or the machine type model for your server to see the parts for your server.

Note: Depending on the model, your server might look slightly different from the illustration.

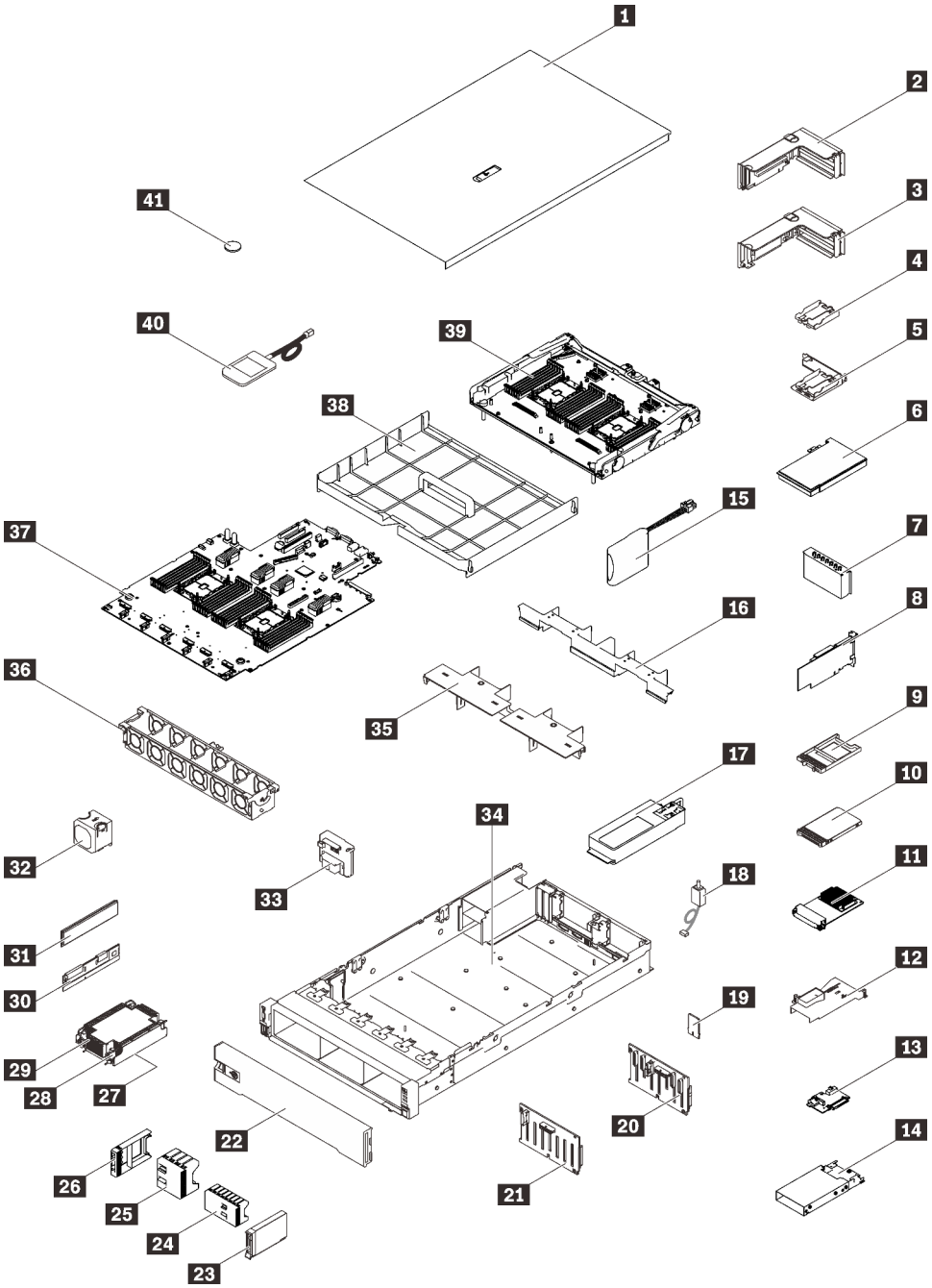

Figure 17. Server components

The parts listed in the following table are identified as one of the following:

- **Tier 1 customer replaceable unit (CRU):** Replacement of Tier 1 CRUs is your responsibility. If Lenovo installs a Tier 1 CRU at your request with no service agreement, you will be charged for the installation.
- **Tier 2 customer replaceable unit (CRU):** You may install a Tier 2 CRU yourself or request Lenovo to install it, at no additional charge, under the type of warranty service that is designated for your server.
- **Field replaceable unit (FRU):** FRUs must be installed only by trained service technicians.

- **Consumable and Structural parts:** Purchase and replacement of consumable and structural parts (components, such as a cover or bezel) is your responsibility. If Lenovo acquires or installs a structural component at your request, you will be charged for the service.

Table 11. Parts list

Index	Description	Tier 1 CRU	Tier 2 CRU	FRU	Consumable and Structural part
For more information about ordering the parts shown in Figure 17 “Server components” on page 39: http://datacentersupport.lenovo.com/products/servers/thinksystem/sr850v2/parts It is highly recommended that you check the power summary data for your server using Lenovo Capacity Planner before purchasing any new parts.					
1	Top cover	√			
2	PCIe riser card assembly	√			
3	PCIe riser	√			
4	Vertical flash power module holder		√		
5	Horizontal power module holder with bracket	√			
6	Adapter	√			
7	PCIe riser filler	√			
8	RAID adapter	√			
9	7mm drive filler	√			
10	7mm drive	√			
11	OCP 3.0 Ethernet adapter	√			
12	OCP Ethernet adapter air baffle	√			
13	7mm drive backplane	√			
14	7mm drive cage	√			
15	Flash power module	√			
16	Expansion tray air baffle	√			
17	Power supply unit	√			
18	Intrusion switch	√			
19	TPM card (for Chinese Mainland only)			√	
20	2.5-inch 8-bay SAS/SATA backplane	√			
21	2.5-inch 8-bay AnyBay/NVMe backplane	√			
22	Security bezel	√			
23	2.5-inch drive	√			
24	8-bay 2.5-inch drive filler	√			
25	4-bay 2.5-inch drive filler	√			

Table 11. Parts list (continued)

Index	Description	Tier 1 CRU	Tier 2 CRU	FRU	Consumable and Structural part
26	2.5-inch drive filler	√			
27	Processor			√	
28	Heat sink Torx T30	√			
29	Heat sink	√			
30	Persistent Memory Module (PMEM)		√		
31	DRAM DIMM		√		
32	Fan	√			
33	Power backplane	√			
34	Chassis			√	
35	Upper expansion tray air baffle	√			
36	Fan cage	√			
37	System board			√	
38	System board air baffle	√			
39	Processor and memory expansion tray			√	
40	External LCD diagnostics handset	√			
41	CMOS battery (CR2032)				√

Power cords

Several power cords are available, depending on the country and region where the server is installed.

To view the power cords that are available for the server:

1. Go to:

   http://dcsc.lenovo.com/#/
2. Click **Preconfigured Model** or **Configure to order**.
3. Enter the machine type and model for your server to display the configurator page.
4. Click **Power → Power Cables** to see all line cords.

Notes:

- For your safety, a power cord with a grounded attachment plug is provided to use with this product. To avoid electrical shock, always use the power cord and plug with a properly grounded outlet.
- Power cords for this product that are used in the United States and Canada are listed by Underwriter's Laboratories (UL) and certified by the Canadian Standards Association (CSA).
- For units intended to be operated at 115 volts: Use a UL-listed and CSA-certified cord set consisting of a minimum 18 AWG, Type SVT or SJT, three-conductor cord, a maximum of 15 feet in length and a parallel blade, grounding-type attachment plug rated 15 amperes, 125 volts.
- For units intended to be operated at 230 volts (U.S. use): Use a UL-listed and CSA-certified cord set consisting of a minimum 18 AWG, Type SVT or SJT, three-conductor cord, a maximum of 15 feet in length and a tandem blade, grounding-type attachment plug rated 15 amperes, 250 volts.
- For units intended to be operated at 230 volts (outside the U.S.): Use a cord set with a grounding-type attachment plug. The cord set should have the appropriate safety approvals for the country in which the equipment will be installed.
- Power cords for a specific country or region are usually available only in that country or region.

Chapter 3. Internal cable routing

See this section to do cable routing for specific components.

Attention: Disengage all latches, release tabs, or locks on cable connectors when you disconnect cables from the system board. Failing to release them before removing the cables will damage the cable sockets on the system board, which are fragile. Strictly observe the following instructions to avoid damaging cable sockets on the system board. Any damage to the cable sockets might require replacing the system board.

- Connect cable connectors vertically or horizontally in alignment with the orientations of the corresponding cable sockets, avoiding any tilt.
- To disconnect cables from the system board, do as follows:
  1. Press and hold all latches, release tabs, or locks on cable connectors to release the cable connectors.
  2. Remove the cable connectors vertically or horizontally in alignment with the orientations of the corresponding cable sockets, avoiding any tilt.

     Note: The cable connectors might look different from those in the illustration, but the removal procedure is the same.

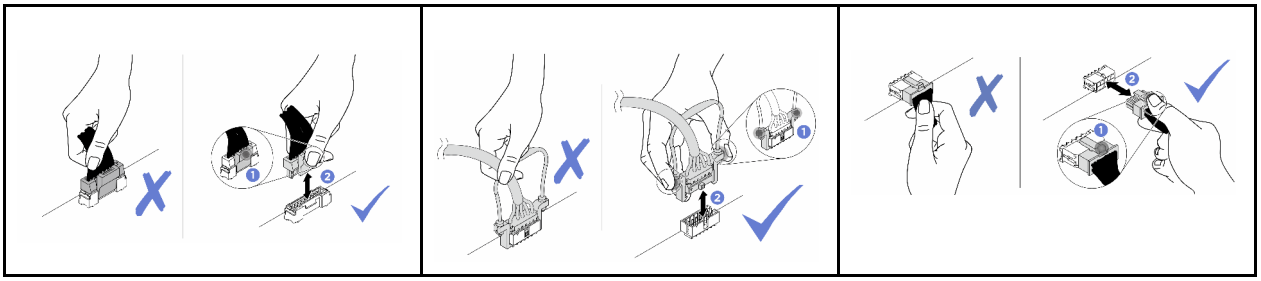

Cable routing for 2.5-inch drives

Follow the instructions in this section to learn how to do cable routing for 2.5-inch drives.

Go through the following list to acquire necessary information before starting cable routing for 2.5-inch drives.

Preliminary parts removal and installation

1. Make sure the following components are removed beforehand:
   - Top cover (see "Remove the top cover" on page 137)
   - Processor and memory expansion tray (see "Remove the processor and memory expansion tray" on page 155)
   - Fan cage (see "Remove the fan cage assembly" on page 139)
2. Make sure to install all the drive backplanes that you plan to installed (see "Install a drive backplane" on page 140).

© Copyright Lenovo 2020, 2025

Power cables

Connect power cables to drive backplanes as illustrated.

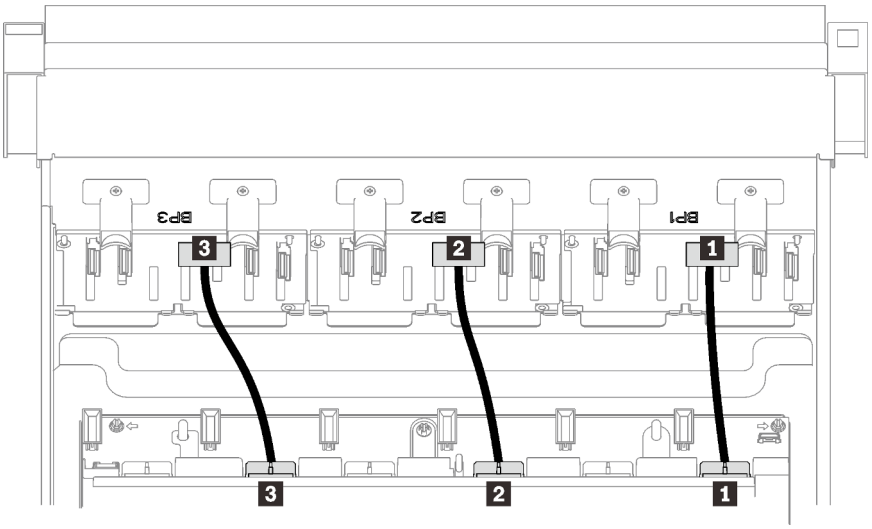

Figure 18. Drive backplane power cables

Table 12. Drive backplane power cables

1 Drive backplane 1 to connector 1	3 Drive backplane 3 to connector 3
2 Drive backplane 2 to connector 2	

Cable guides

Make sure all the signal cables go through the cable guides on the system board and the memory expansion tray.

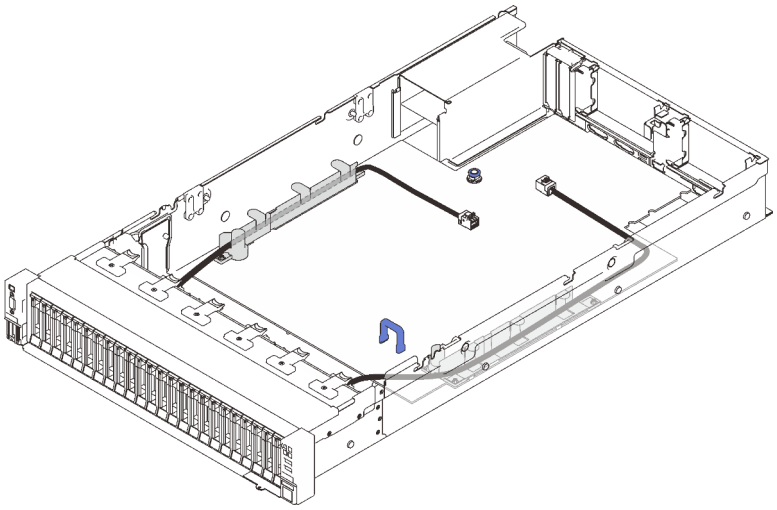

Figure 19. Cable guides on the system board

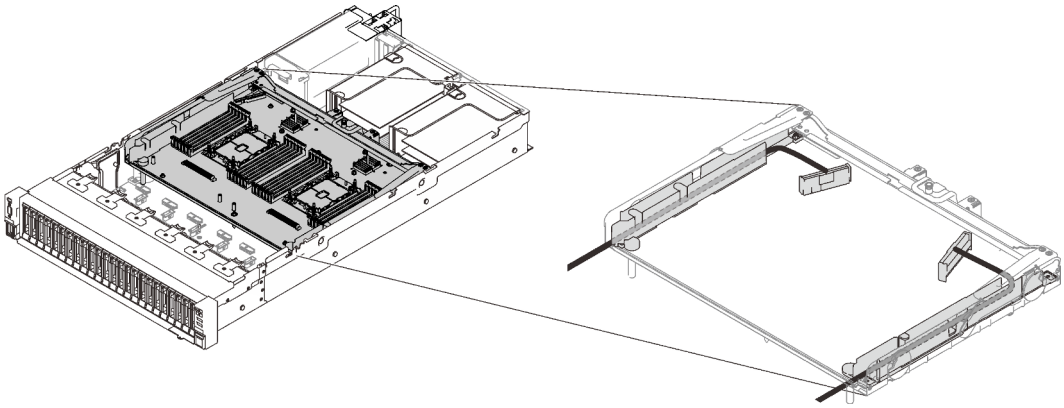

Figure 20. Cable guides on the processor and memory expansion tray

SAS/SATA cables for Gen3 and Gen4 RAID adapters

When picking cables for 8i and 16i RAID adapters from SAS/SATA cable kits, make sure to choose the cables based on the generation of RAID adapters that you plan to install:

- **Gen3 RAID adapters** (430-8i, 930-8i, 430-16i, 530-16i, 930-16i): MiniSAS to Slimline cable
- **Gen4 RAID adapters** (940-8i, 940-16i): Slimline cable

Backplane and PCIe slot reference

See the label on the cable for reference of PCIe slots to installed RAID adapters or PCIe switch cards in. For example, “BP 1/4” and “Slot 1/8 means the cable could be applied to the following scenarios:

- Connecting backplane 1 to RAID adapter that is installed in slot 1
- Connecting backplane 4 to RAID adapter that is installed in slot 8

Connecting cables to the processor and memory expansion tray

Follow the instructions in this section to learn how to connect cables to the processor and memory expansion tray.

When working on cable routing plans that involve the processor and memory expansion tray, perform the procedure in the following order.

1. Connect the following:
   - Connect all the cables in the plan to corresponding drive backplanes.
   - Connect all the SAS/SATA cables to the adapters or the on-board SAS/SATA connector.
   - If applicable, connect the two PCIe cables to the connectors on the system board.
2. Install the expansion tray air baffle.

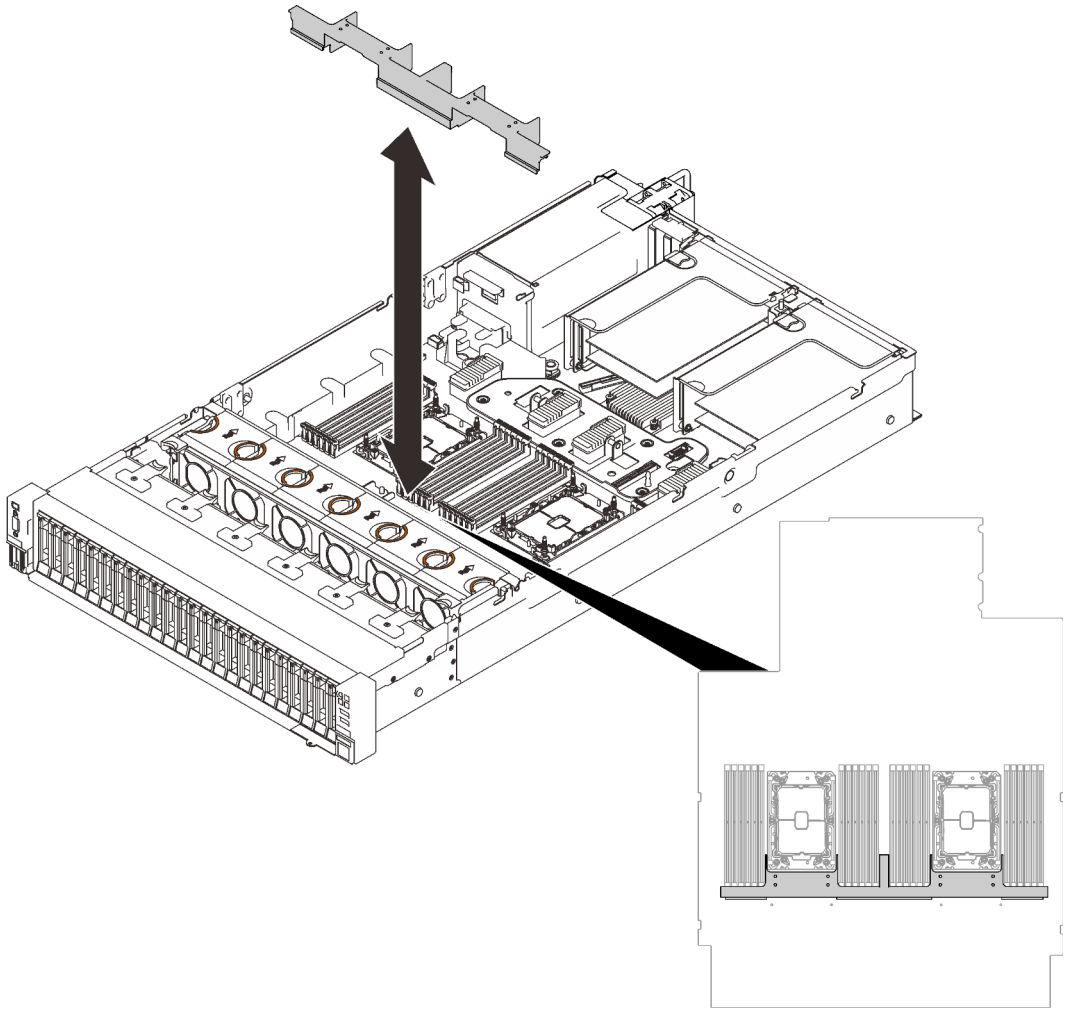

Figure 21. Installing the expansion tray air baffle

3. Align the processor and memory expansion tray with the two pairs of guides on the sides, and lower it into the chassis.

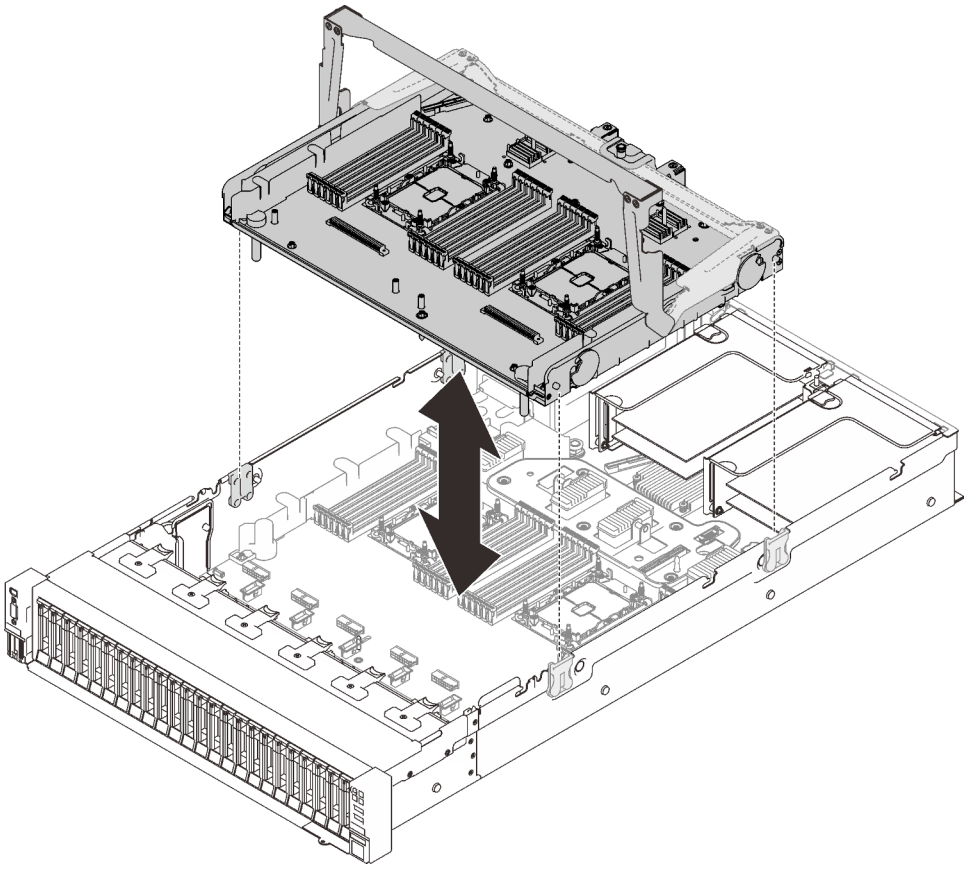

Figure 22. Installing the processor and memory expansion tray

4. Route the two PCIe cables through the side cable guides, and connect them to the processor and memory expansion tray.

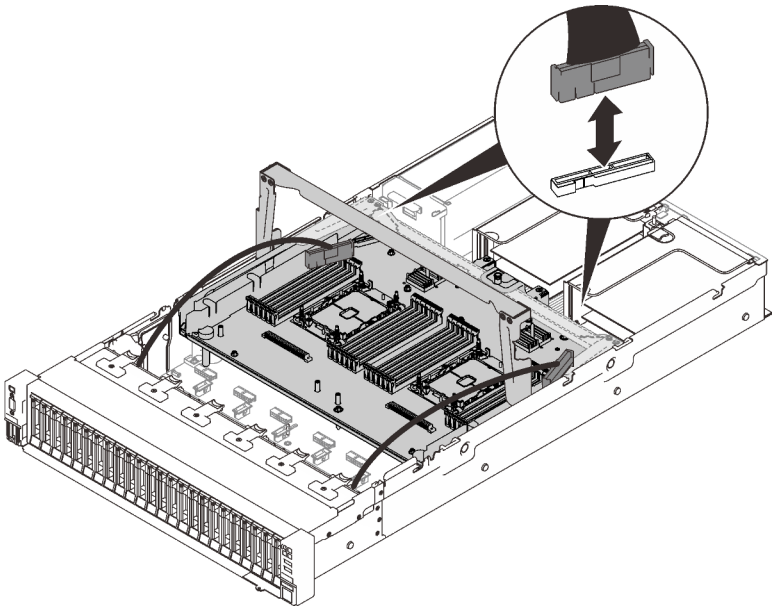

Figure 23. Connecting cables to the expansion tray

5. Secure the processor and memory expansion tray.

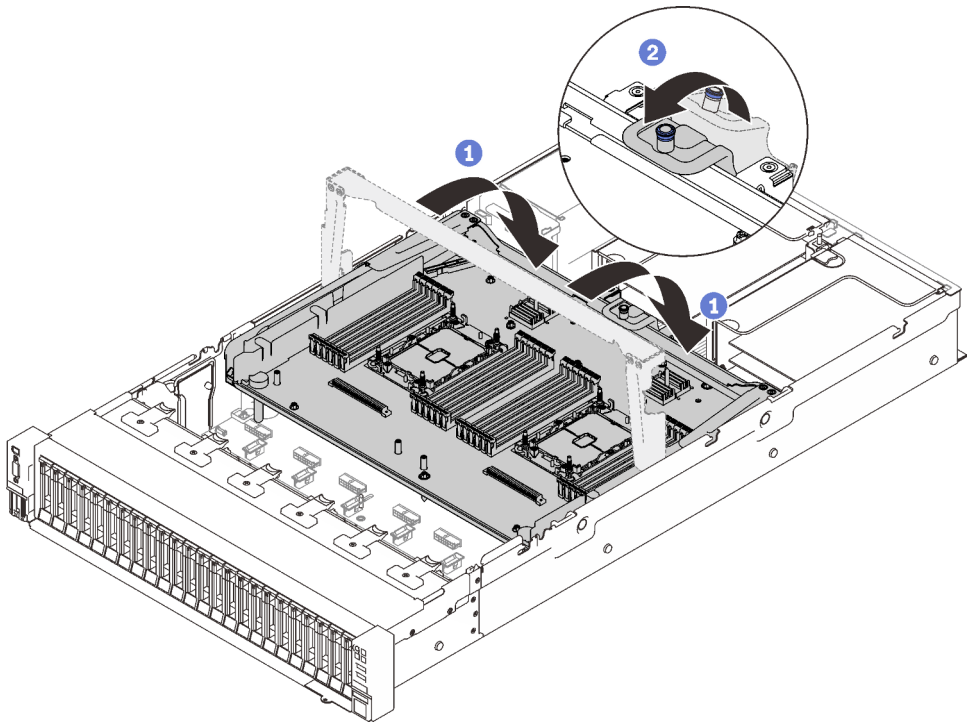

Figure 24. Securing the processor and memory expansion tray

1 Rotate the handle all the way down. This connects and fixes the expansion tray to the system board.

2 Pull the retaining tab back to secure the handle.

Connecting cables to the NVMe switch cards

Follow the instructions in this section to learn how to connect cables to the NVMe switch cards.

When working on cable routing plans that involve NVMe switch cards, perform the procedure in the following order.

Step 1. Complete the procedure in "Connecting cables to the processor and memory expansion tray" on page 46.

Step 2. Connect the four PCIe cables to the two NVMe switch cards.

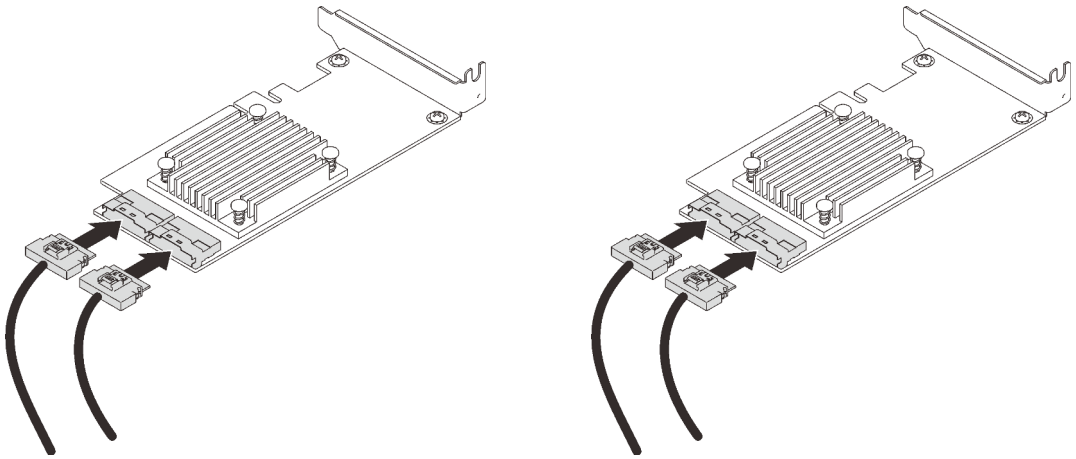

Note: Make sure to match the drive backplane and NVMe switch card connectors as following:

Table 13. Drive backplane and NVMe switch card connectors

AnyBay/NVMe drive backplane connector	Switch card connector
0-1	C0
2-3	C1
4-5	C0
6-7	C1

Figure 25. Connecting cables to the NVMe switch cards

Step 3. Install the two adapters into corresponding slots on the x16/x16 PCIe riser card (see "Install an adapter in the PCIe riser assembly" on page 145).

Note:

Table 14. NVMe switch cards and corresponding PCIe slot numbers

	AnyBay/NVMe drive backplane connectors which are connected to the NVMe switch card	PCIe slot number
1	0-1, 2-3	Slot 5
2	4-5, 6-7	Slot 6

Step 4. Install the PCIe riser card (see "Install the PCIe riser assembly" on page 152).

SAS/SATA backplane combinations

Follow the instructions in this section to learn how do cable routing for combinations with SAS/SATA backplanes.

See the following sections for cable routing combinations with only SAS/SATA drive backplanes.

- "One backplane" on page 51
- "Two backplanes" on page 54

- “Three backplanes” on page 55

One backplane

One SAS/SATA backplane

On-board connector

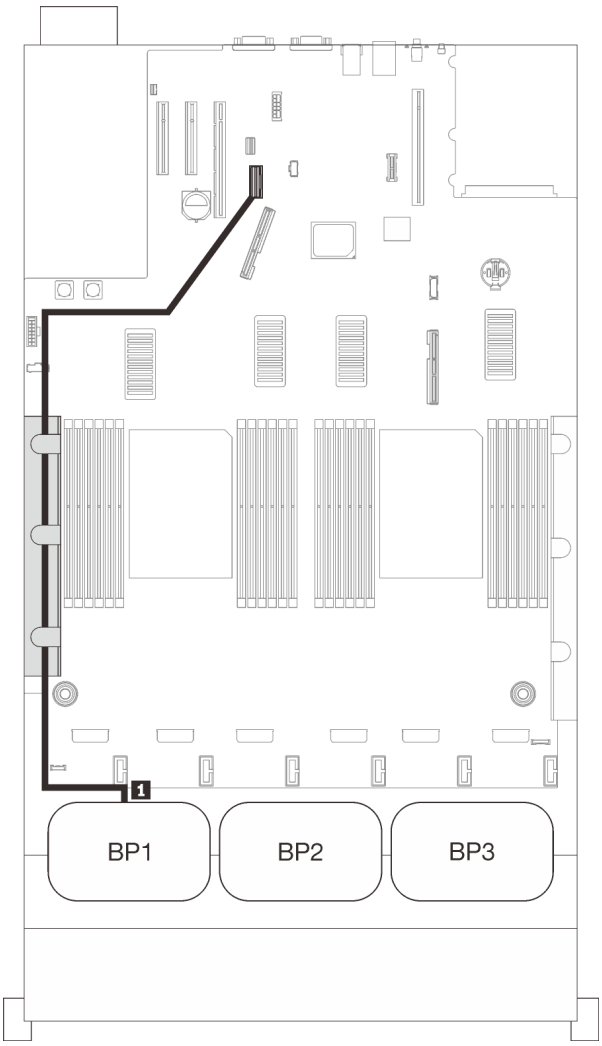

SAS/SATA cable routing

	Length	To
1	845 mm	On-board

8i RAID adapter

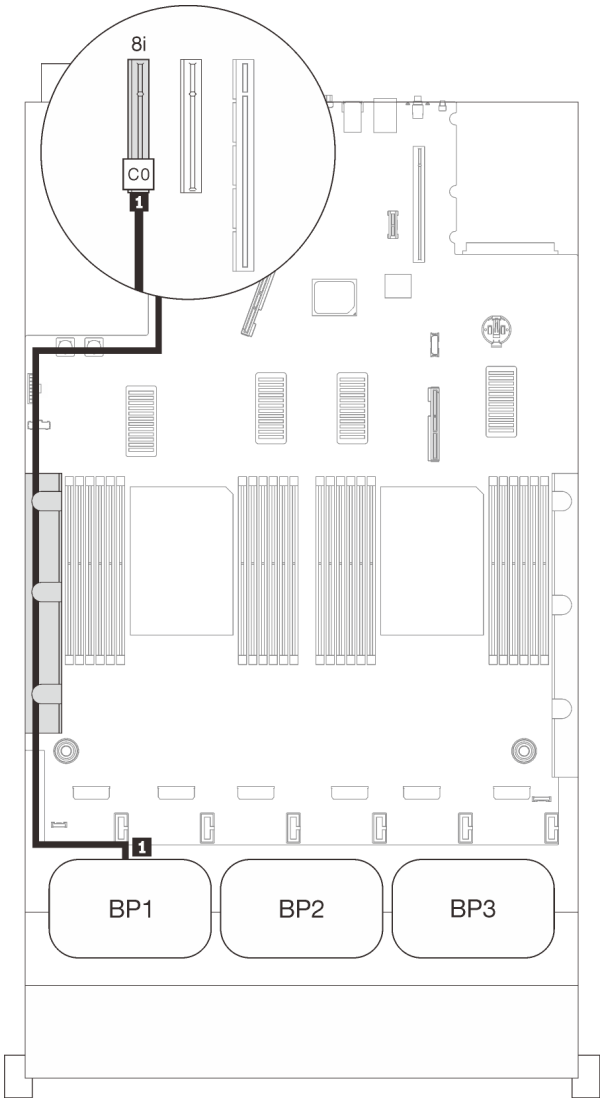

SAS/SATA cable routing		
	Length	To
1	• Gen3: 665 mm • Gen4: 690 mm	C0 (8i)

16i RAID adapter

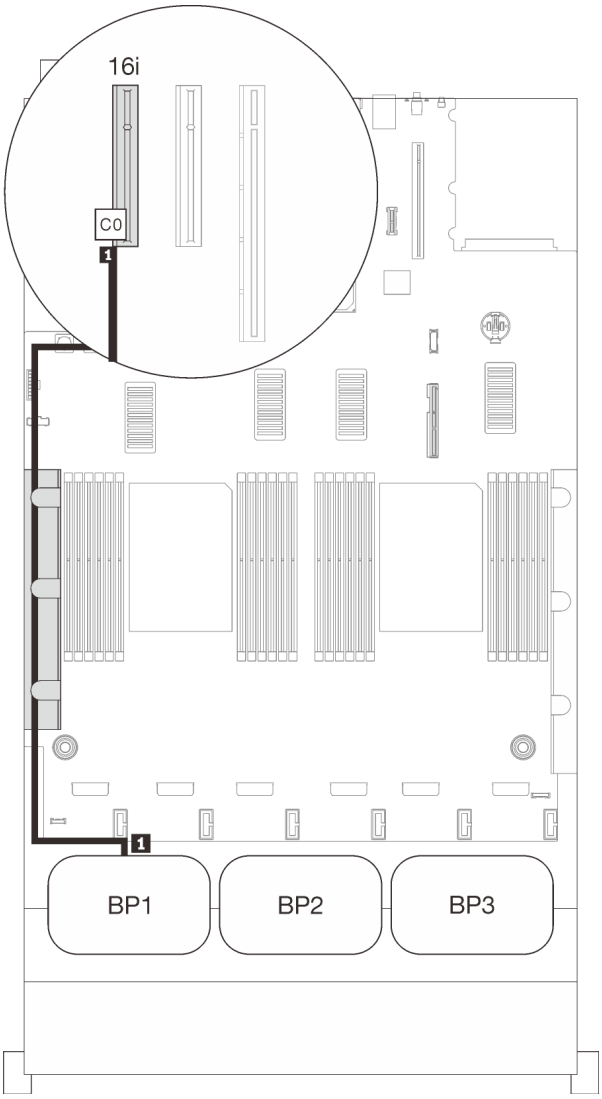

SAS/SATA cable routing

	Length	To
1	• Gen3: 665 mm • Gen4: 690 mm	C0 (16i)

Two backplanes

Two SAS/SATA backplanes

16i RAID adapter

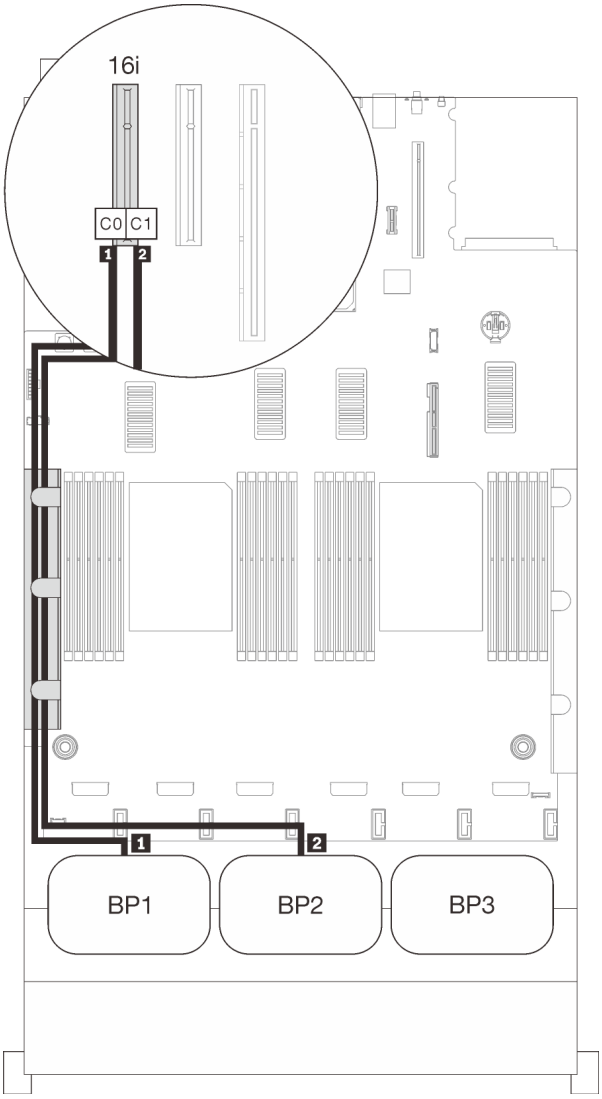

SAS/SATA cable routing

	Length	To
1	• Gen3: 665 mm • Gen4: 690 mm	C0 (16i)
2	860 mm	C1 (16i)

Three backplanes

Three SAS/SATA backplanes

On-board connector + 16i RAID adapter

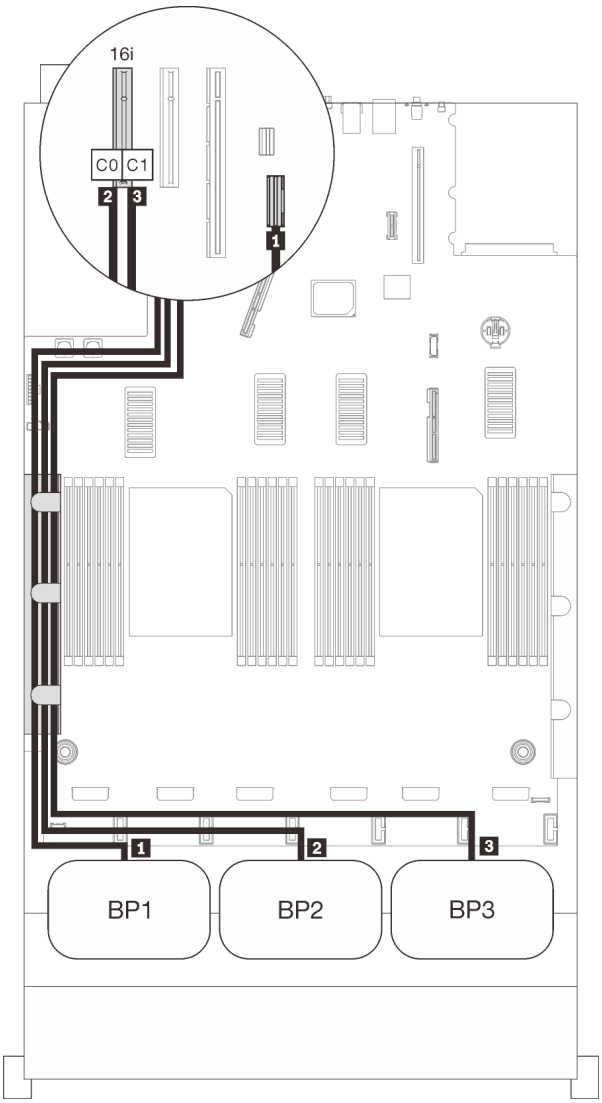

SAS/SATA cable routing		
	Length	To
1	845 mm	On-board
2	860 mm	C0 (16i)
3	1000 mm	C1 (16i)

8i + 16i RAID adapter

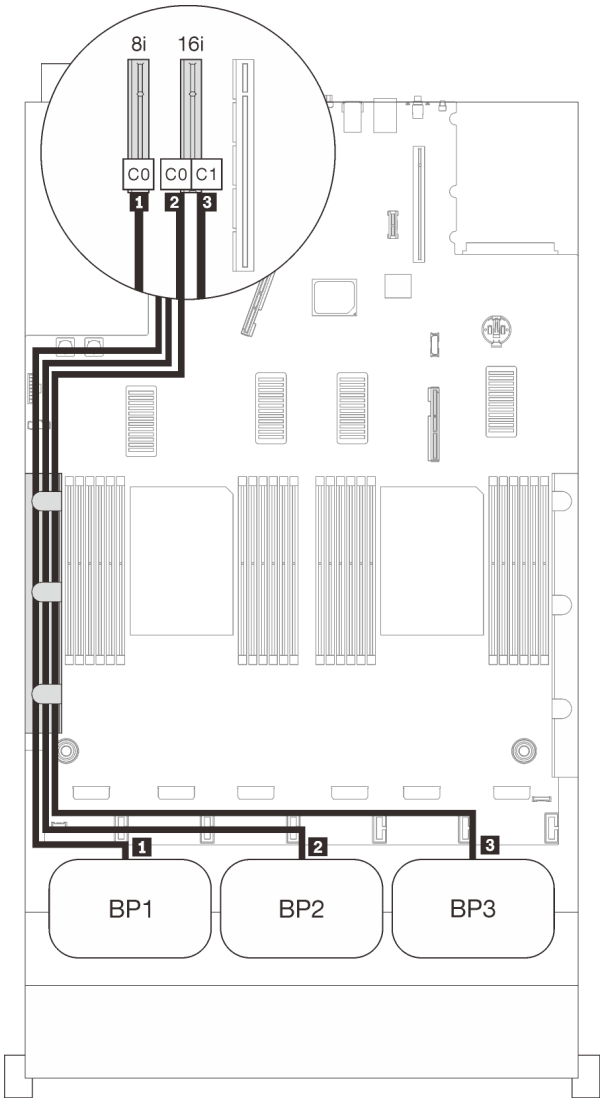

SAS/SATA cable routing		
	Length	To
1	• Gen3: 665 mm • Gen4: 690 mm	C0 (8i)
2	860 mm	C0 (16i)
3	1000 mm	C1 (16i)

32i RAID adapter

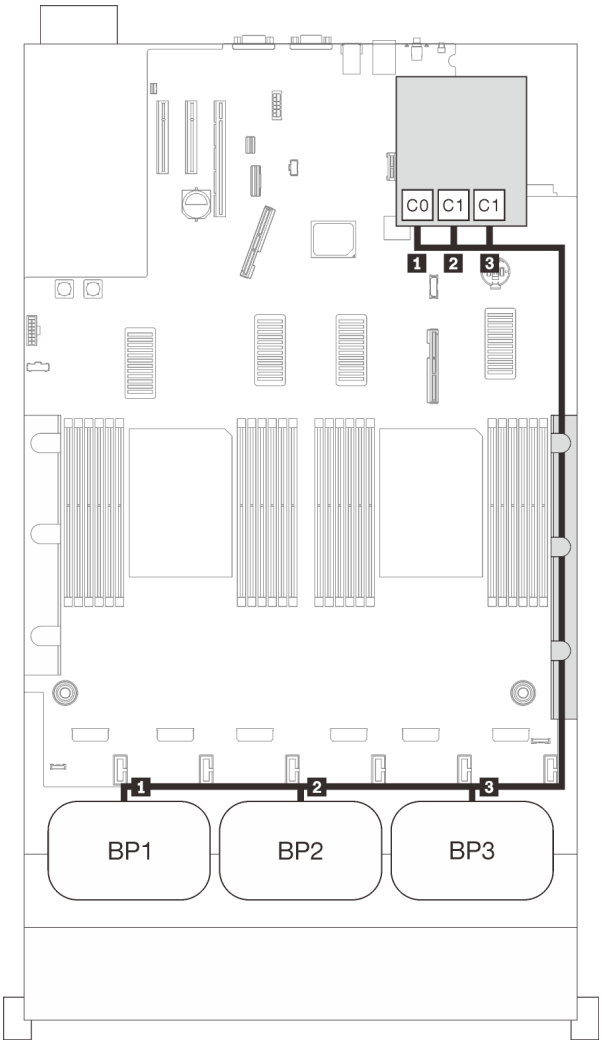

SAS/SATA cable routing

	Length	To
1	860 mm	C0 (32i)
2	690 mm	C1 (32i)
3	665 mm	C2 (32i)

16i + 8i RAID adapter

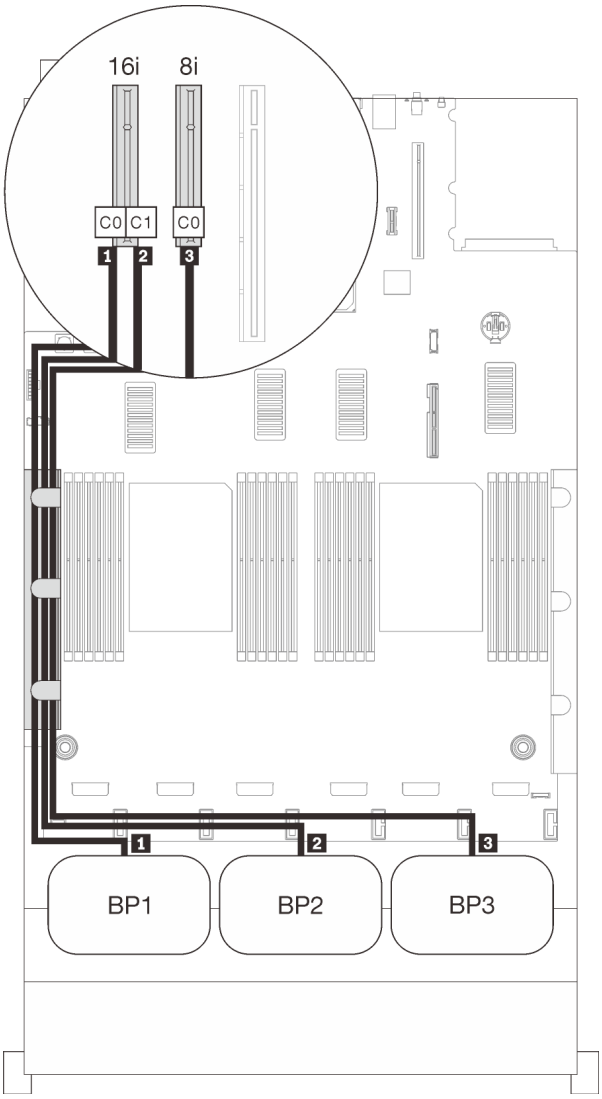

SAS/SATA cable routing

	Length	To
1	• Gen3: 665 mm • Gen4: 690 mm	C0 (16i)
2	860 mm	C1 (16i)
3	1000 mm	C0 (8i)

8i + 8i + 8i RAID adapter

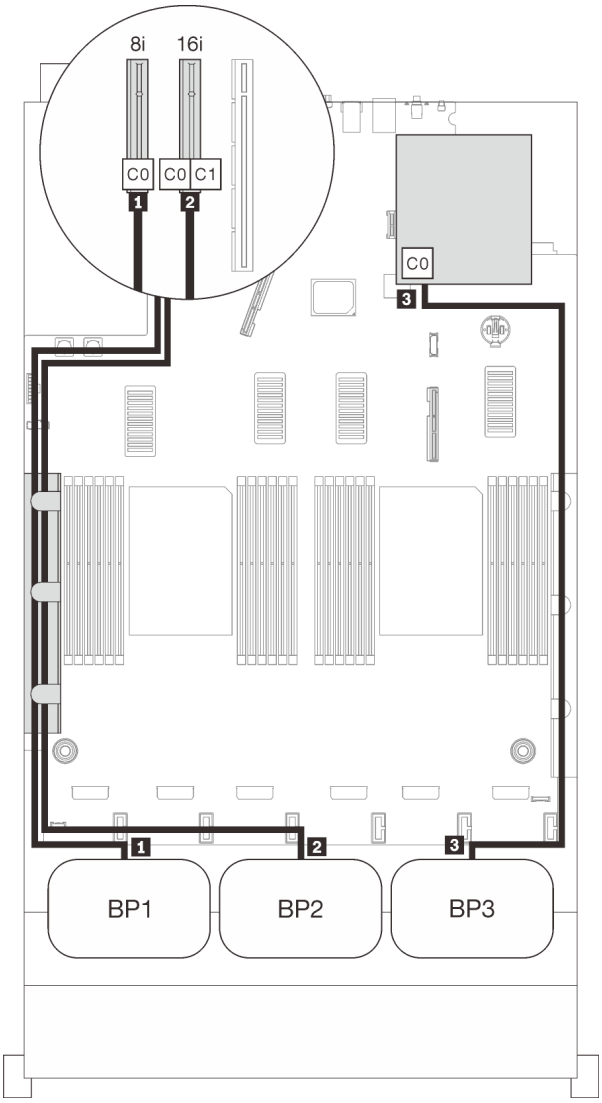

SAS/SATA cable routing

	Length	To
1	665 mm	C0 (8i)
2	860 mm	C0 (8i)
3	665 mm	C0 (8i)

NVMe backplane combinations

Follow the instructions in this section to learn how do cable routing for pure NVMe backplanes.

Notes:

- See “Connecting cables to the processor and memory expansion tray” on page 46 to perform the procedure properly while connecting PCIe cables to the processor and memory expansion tray.
- See “Connecting cables to the NVMe switch cards” on page 48 to perform the procedure properly while connecting PCIe cables to the PCIe switch cards.

See the following sections for cable routing combinations with only NVMe drive backplanes.

- “One backplane” on page 63
- “Two backplanes” on page 65
- “Three backplanes” on page 67

One backplane

One NVMe backplane

System board

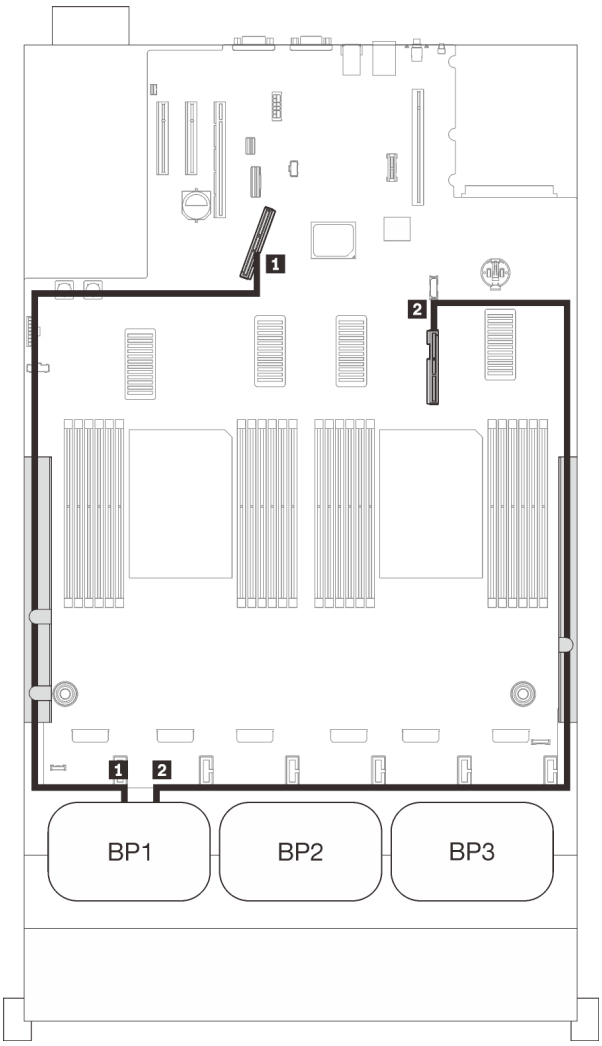

PCIe cable routing		
NVMe connector	Length	To
1 0-1, 2-3	670 mm	PCIe 1 (on-board)
2 4-5, 6-7	910 mm	PCIe 2 (on-board)

Processor and memory expansion tray

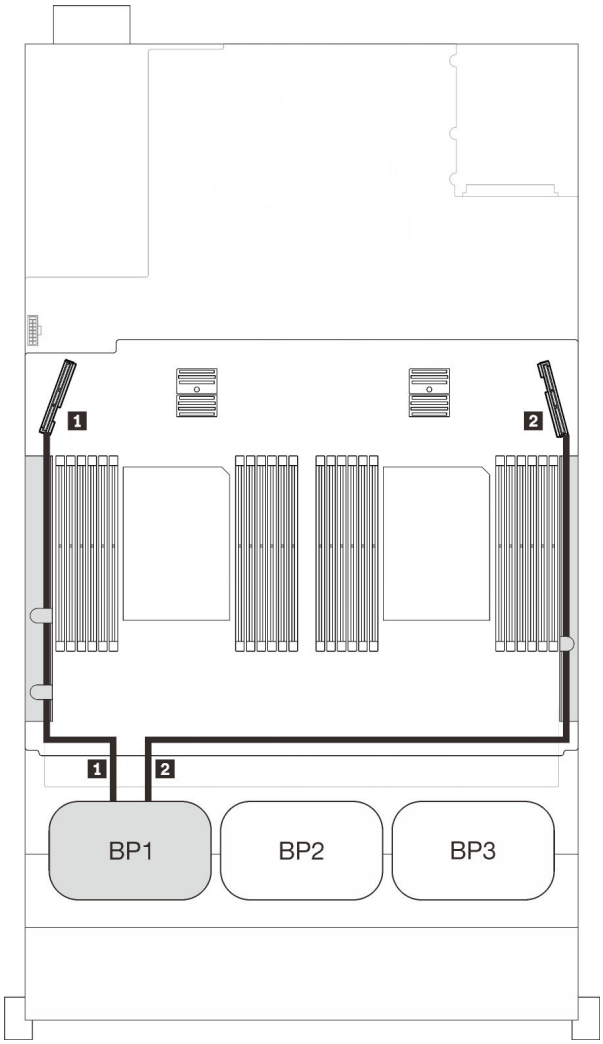

PCIe cable routing

NVMe connector	Length	To
1 0-1, 2-3	530 mm	PCIe 3 (tray)
2 4-5, 6-7	670 mm	PCIe 6 (tray)

Two backplanes

Two NVMe backplanes

System board + processor and memory expansion tray

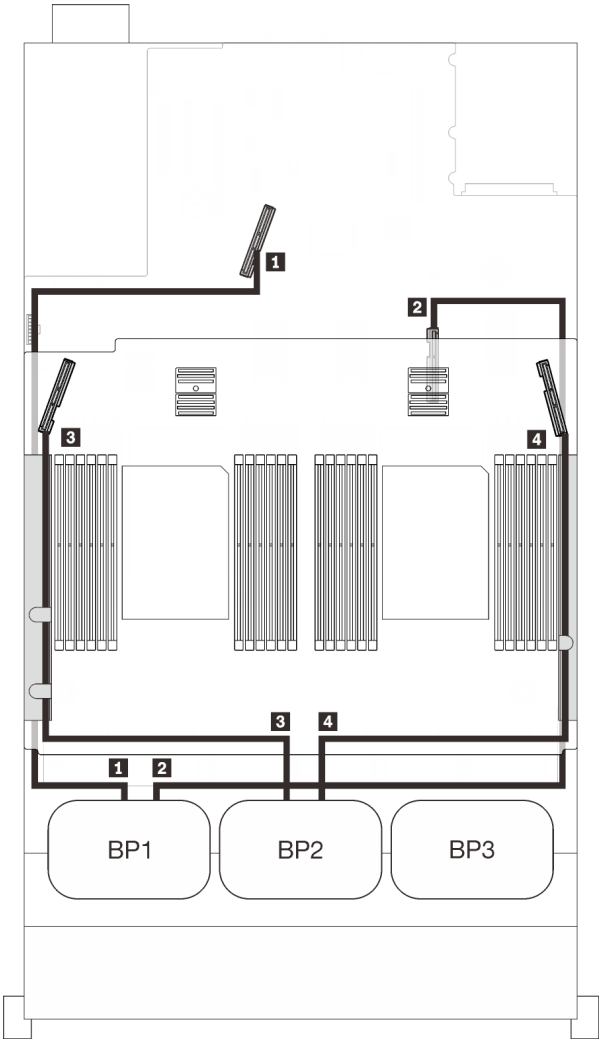

PCIe cable routing

NVMe connector	Length	To
1 0-1, 2-3	670 mm	PCIe 1 (on-board)
2 4-5, 6-7	910 mm	PCIe 2 (on-board)
3 0-1, 2-3	530 mm	PCIe 3 (tray)
4 4-5, 6-7	670 mm	PCIe 6 (tray)

Processor and memory expansion tray + PCIe switch cards

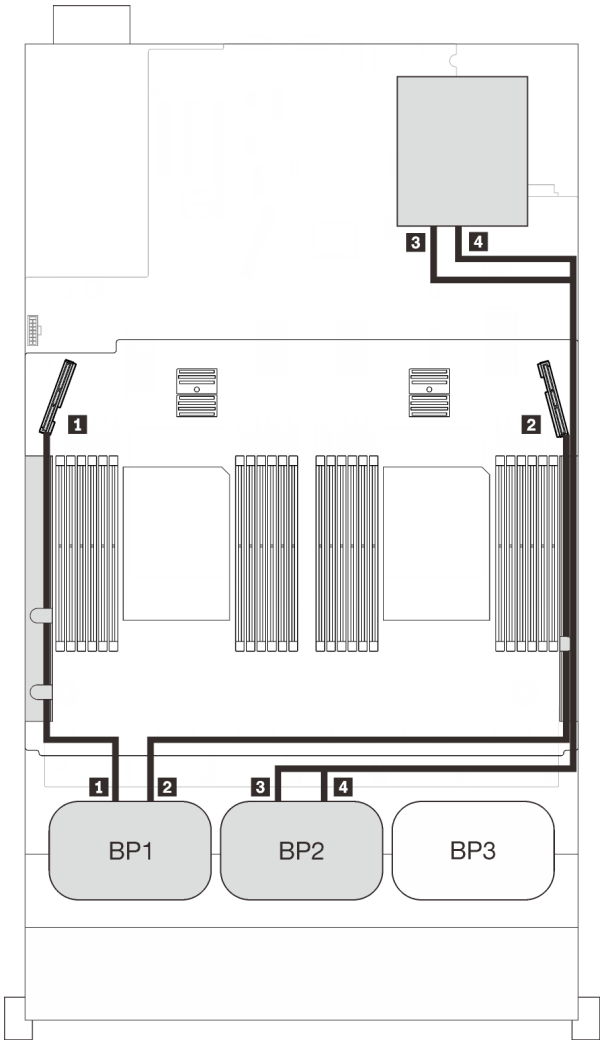

PCIe cable routing

NVMe connector	Length	To
1 0-1, 2-3	530 mm	PCIe 3 (tray)
2 4-5, 6-7	670 mm	PCIe 6 (tray)
3 0-1, 2-3	1100 mm	C0, C1 (Slot 5)
4 4-5, 6-7	1100 mm	C0, C1 (Slot 6)

Three backplanes

Three NVMe backplanes

System board + processor and memory expansion tray + PCIe switch cards

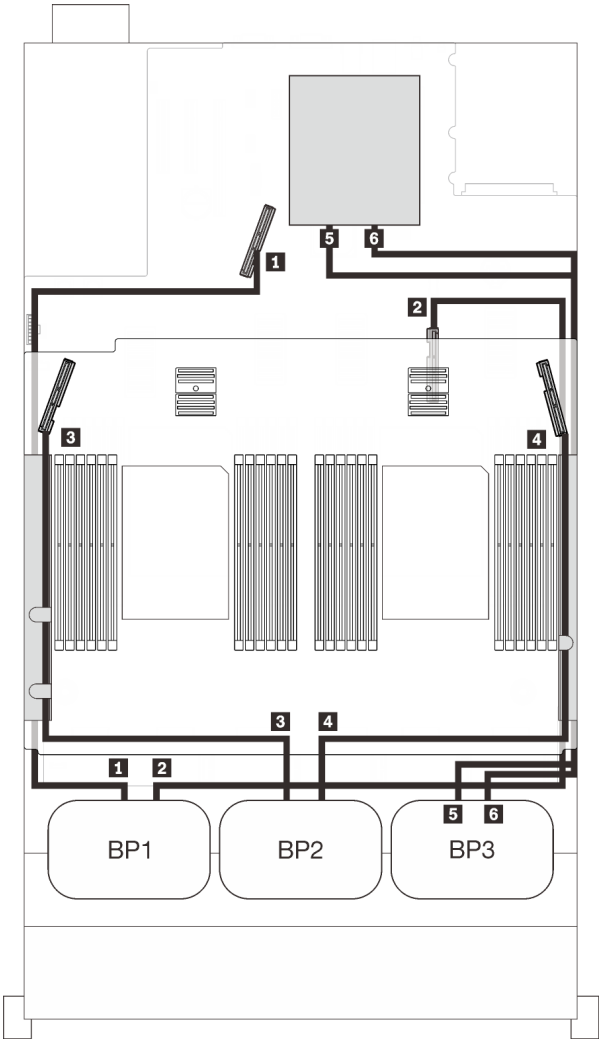

PCIe cable routing

NVMe connector	Length	To
1 0-1, 2-3	670 mm	PCIe 1 (on-board)
2 4-5, 6-7	910 mm	PCIe 2 (on-board)
3 0-1, 2-3	530 mm	PCIe 3 (tray)
4 4-5, 6-7	670 mm	PCIe 6 (tray)
5 0-1, 2-3	1100 mm	C0, C1 (Slot 5)
6 4-5, 6-7	1100 mm	C0, C1 (Slot 6)

One-AnyBay-backplane combinations

Follow the instructions in this section to learn how do cable routing for combinations with one AnyBay backplane.

See the following sections for cable routing combinations with one AnyBay drive backplane.

- "With two processors" on page 69
  - "One backplane" on page 69
  - "Two backplanes" on page 72
  - "Three backplanes" on page 73
- "With four processors" on page 77
  - "One backplane" on page 77
  - "Two backplanes" on page 80
  - "Three backplanes" on page 82

With two processors

Follow the instructions in this section to learn how do cable routing for combinations with one AnyBay backplane and two processors.

One backplane

One AnyBay backplane

On-board connector

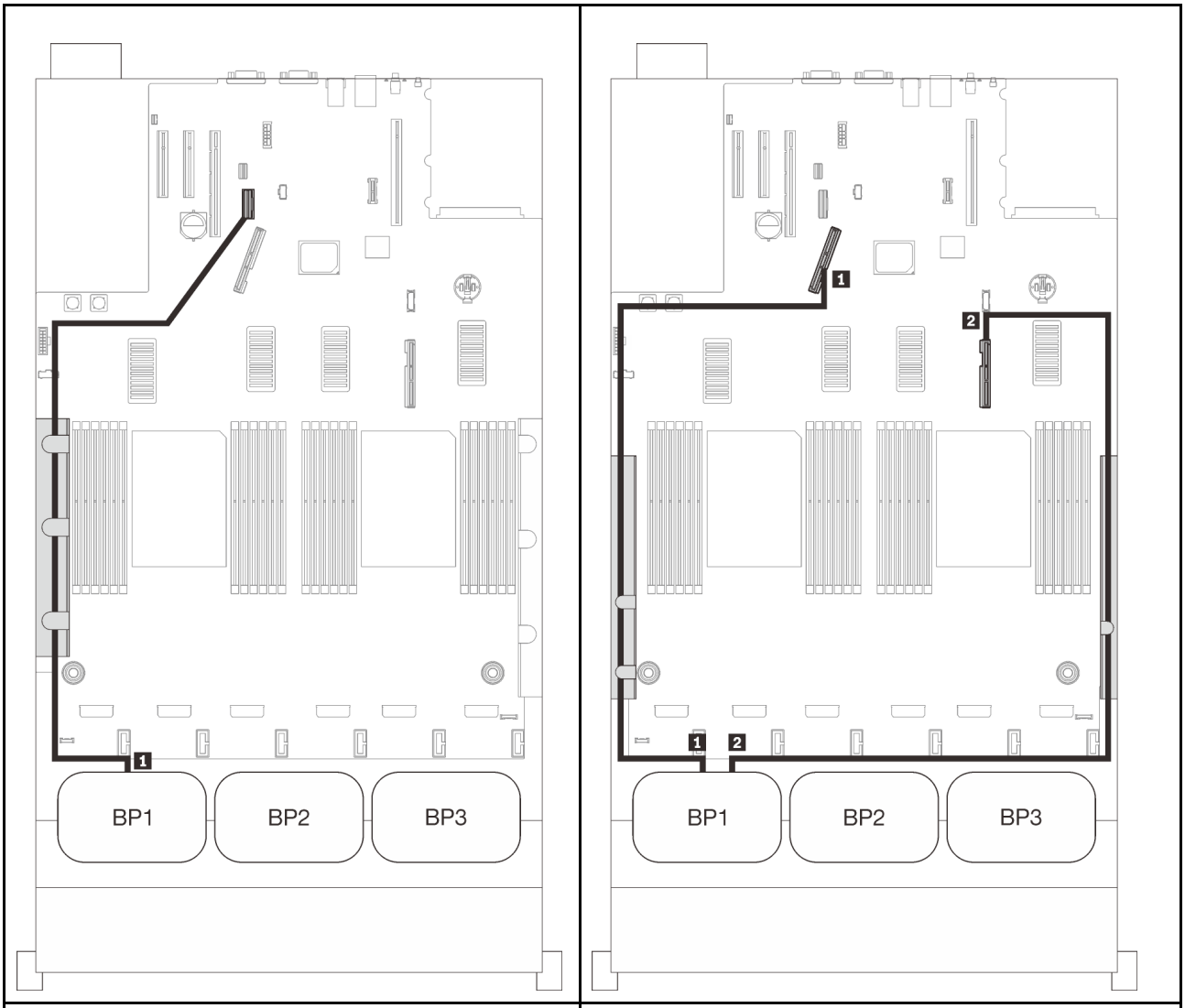

SAS/SATA cable routing			PCIe cable routing		
	Length	To	NVMe connector	Length	To
1	845 mm	On-board	1 0-1, 2-3	670 mm	PCIe 1 (on-board)
			2 4-5, 6-7	910 mm	PCIe 2 (on-board)

8i RAID adapter

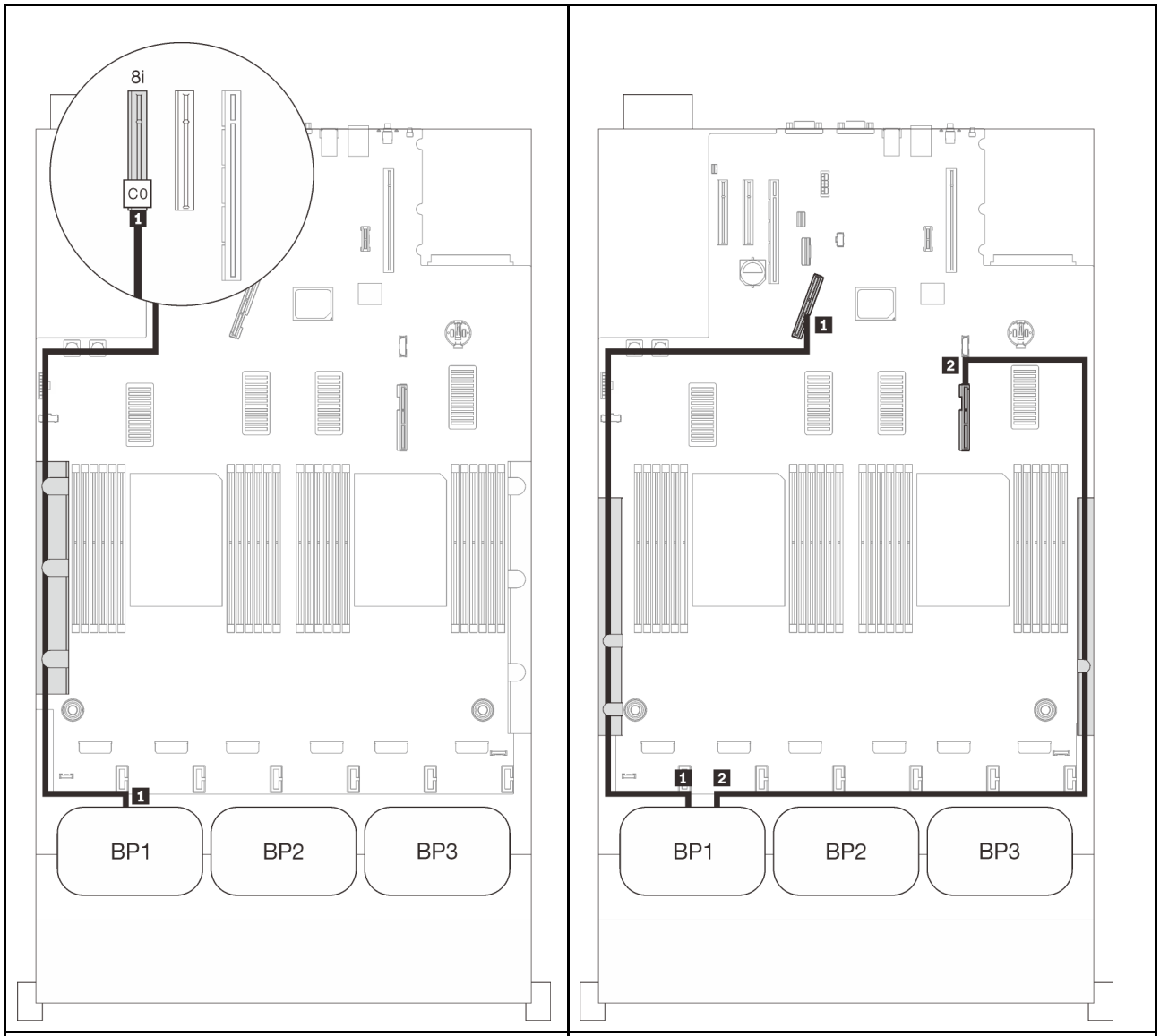

SAS/SATA cable routing			PCIe cable routing		
	Length	To	NVMe connector	Length	To
1	665 mm	C0 (8i)	1 0-1, 2-3	670 mm	PCIe 1 (on-board)
			2 4-5, 6-7	910 mm	PCIe 2 (on-board)

16i RAID adapter

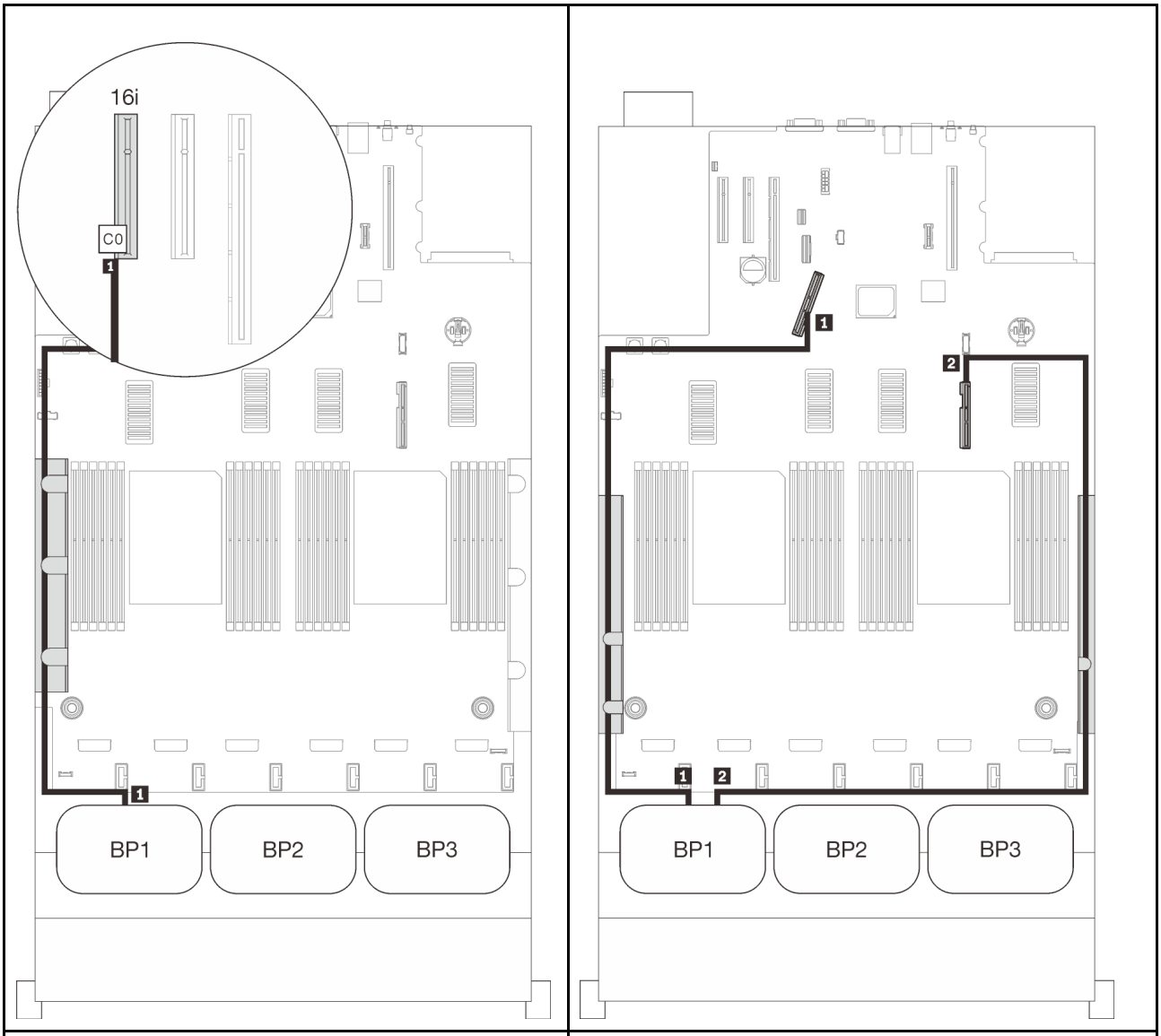

SAS/SATA cable routing			PCIe cable routing		
	Length	To	NVMe connector	Length	To
1	• Gen3: 665 mm • Gen4: 690 mm	C0 (16i)	1 0-1, 2-3	670 mm	PCIe 1 (on-board)
			2 4-5, 6-7	910 mm	PCIe 2 (on-board)

Two backplanes

One AnyBay and one SAS/SATA backplane

16i RAID adapter

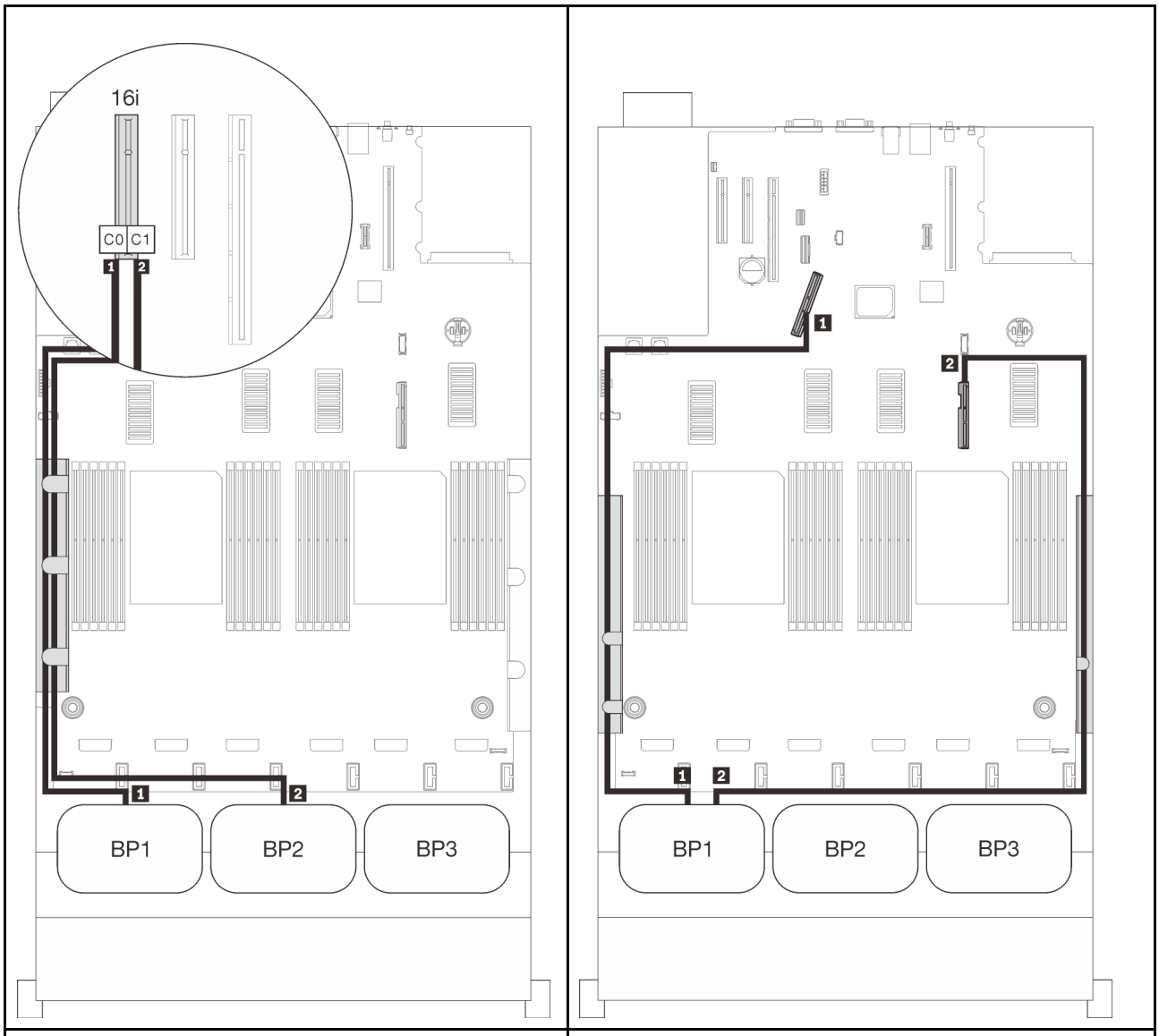

SAS/SATA cable routing			PCIe cable routing		
	Length	To	NVMe connector	Length	To
1	665 mm	C0 (16i)	1 0-1, 2-3	670 mm	PCIe 1 (on-board)
2	860 mm	C1 (16i)	2 4-5, 6-7	910 mm	PCIe 2 (on-board)

Three backplanes

One AnyBay and two SAS/SATA backplanes

On-board connector + 16i RAID adapter

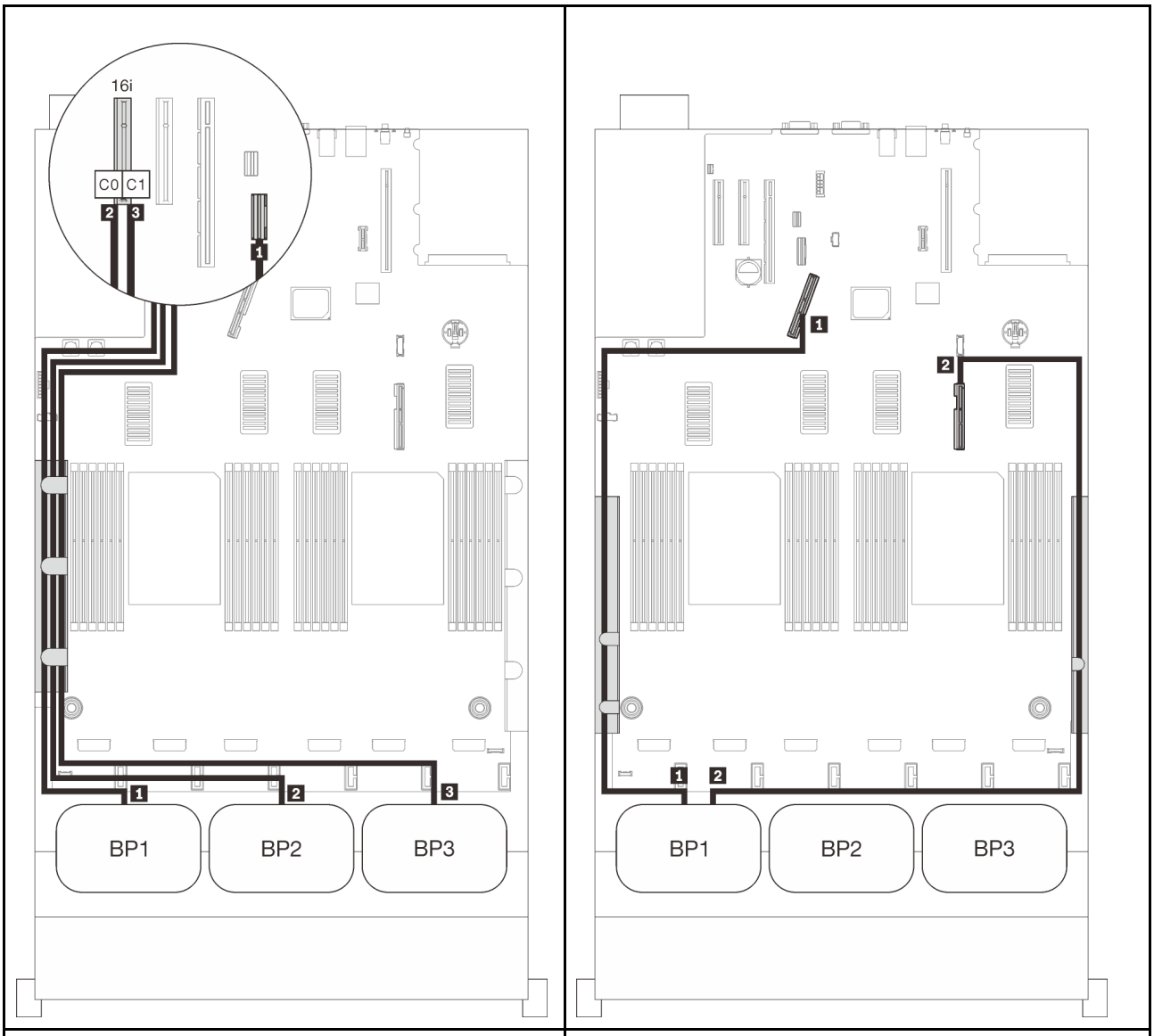

SAS/SATA cable routing			PCIe cable routing		
	Length	To	NVMe connector	Length	To
1	845 mm	On-board	1 0-1, 2-3	670 mm	PCIe 1 (on-board)
2	860 mm	C0 (16i)	2 4-5, 6-7	910 mm	PCIe 2 (on-board)
3	1000 mm	C1 (16i)			

8i + 16i RAID adapters

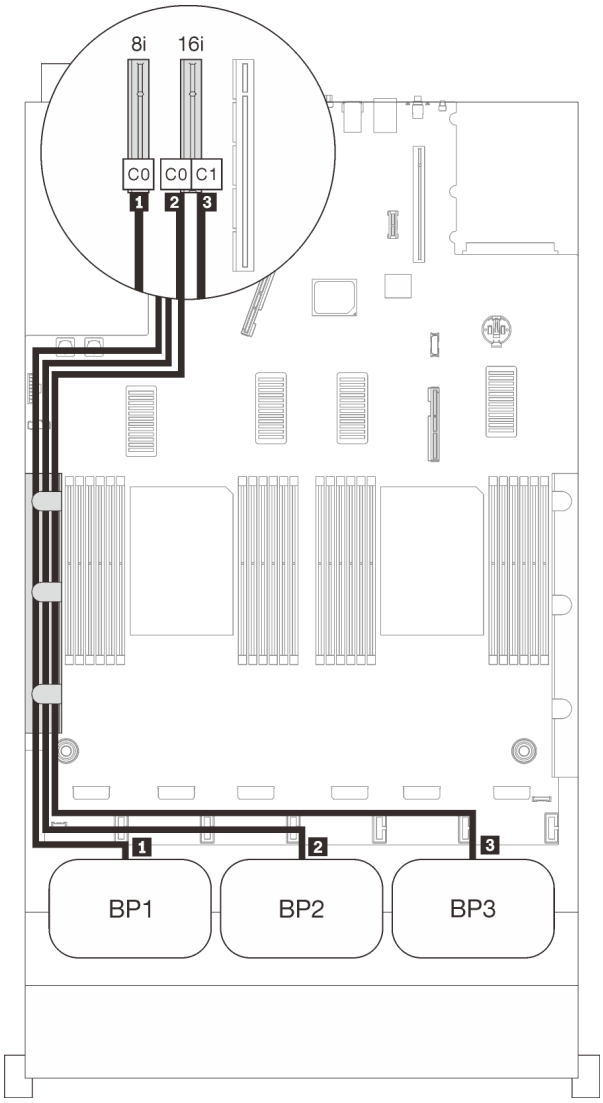

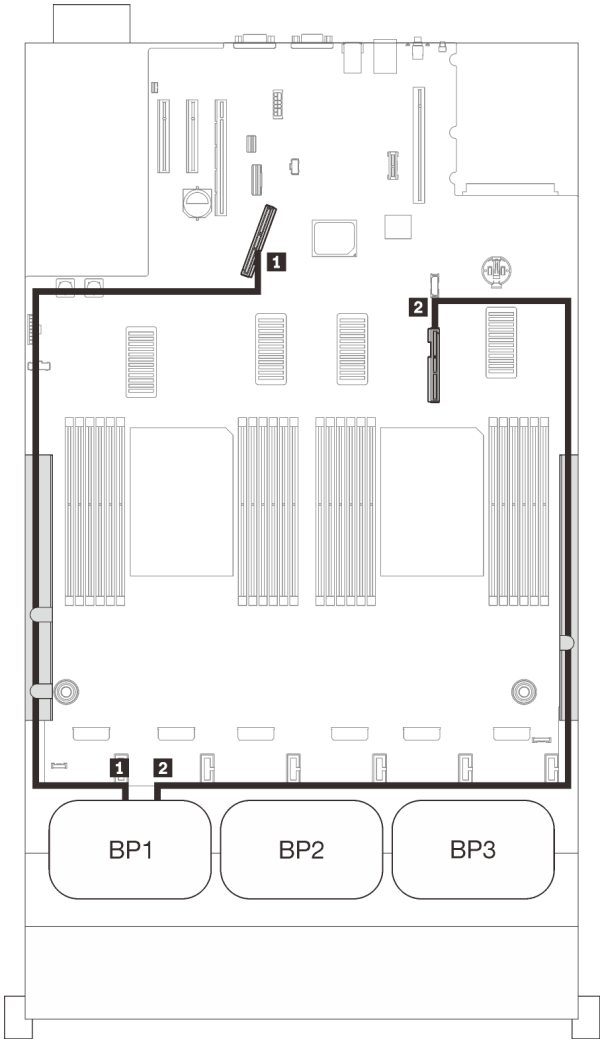

SAS/SATA cable routing			PCIe cable routing		
	Length	To	NVMe connector	Length	To
1	665 mm	C0 (8i)	1 0-1, 2-3	670 mm	PCIe 1 (on-board)
2	860 mm	C0 (16i)	2 4-5, 6-7	910 mm	PCIe 2 (on-board)
3	1000 mm	C1 (16i)			

32i RAID adapter

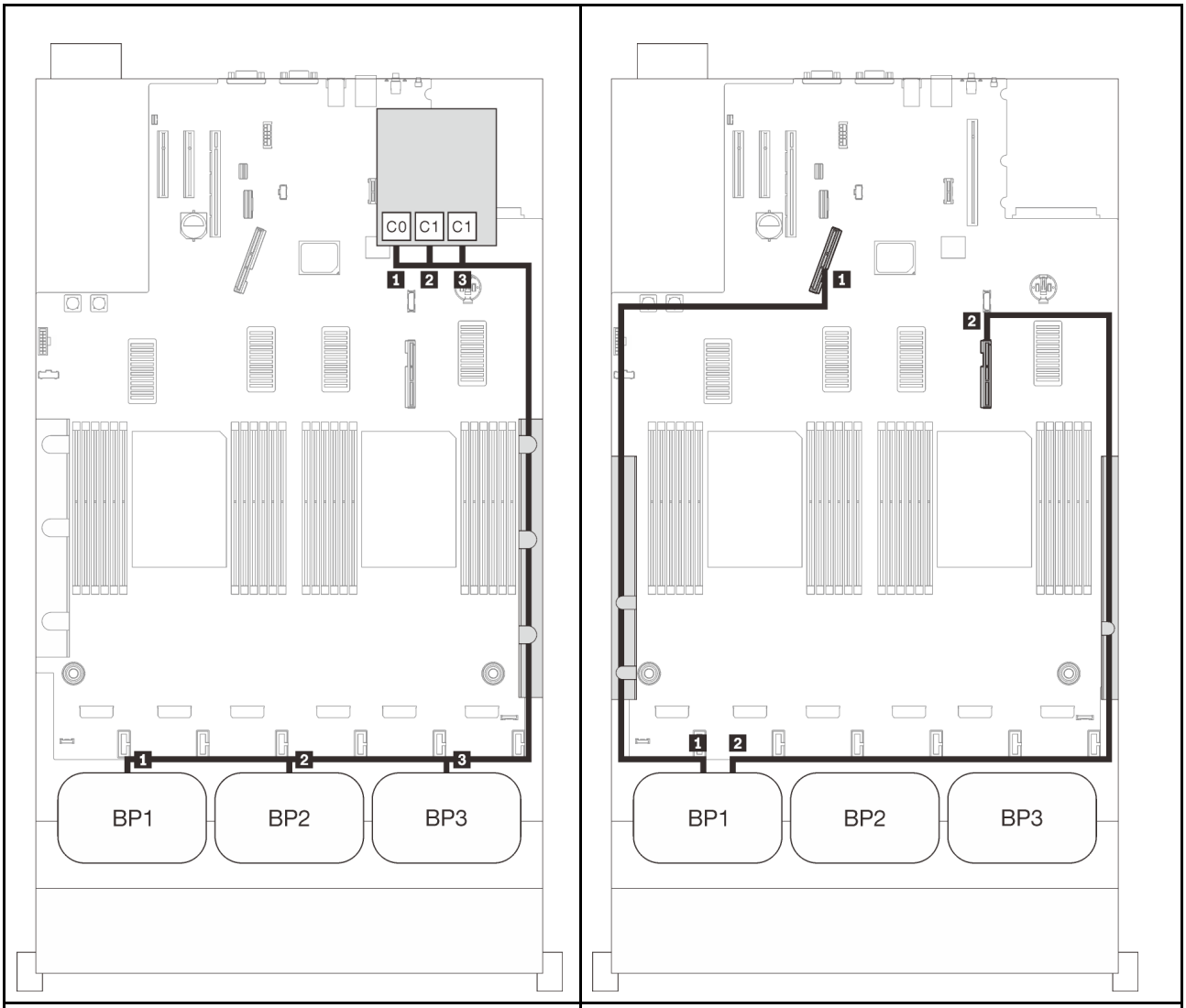

SAS/SATA cable routing			PCIe cable routing		
	Length	To	NVMe connector	Length	To
1	860 mm	C0 (32i)	1 0-1, 2-3	670 mm	PCIe 1 (on-board)
2	690 mm	C1 (32i)	2 4-5, 6-7	910 mm	PCIe 2 (on-board)
3	665 mm	C2 (32i)			

16i + 8i RAID adapter

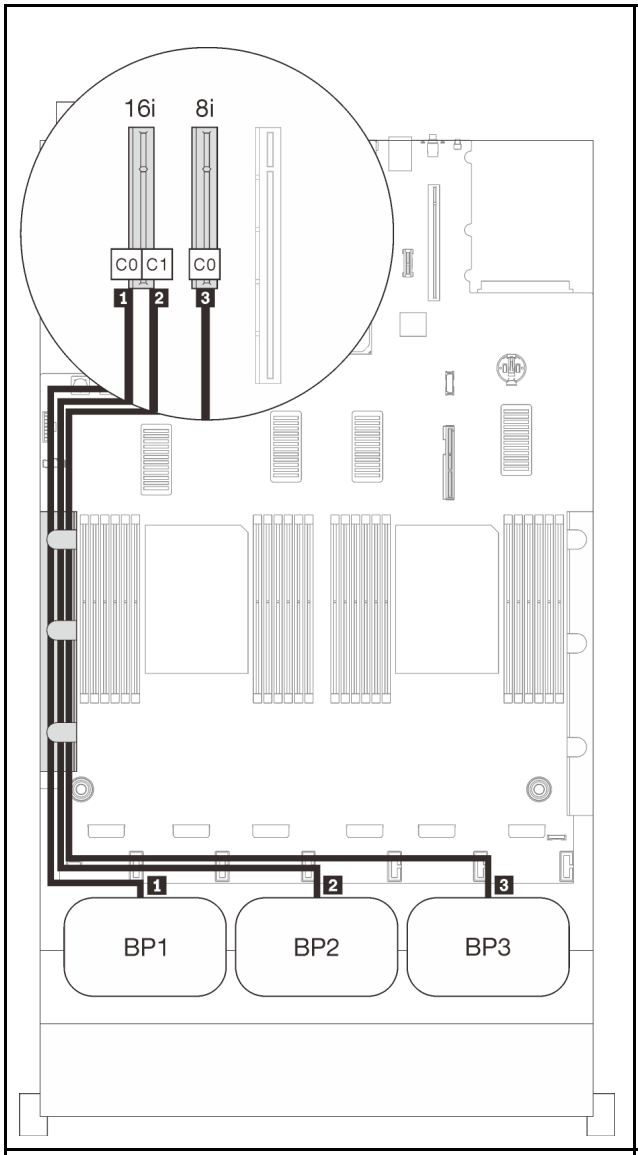

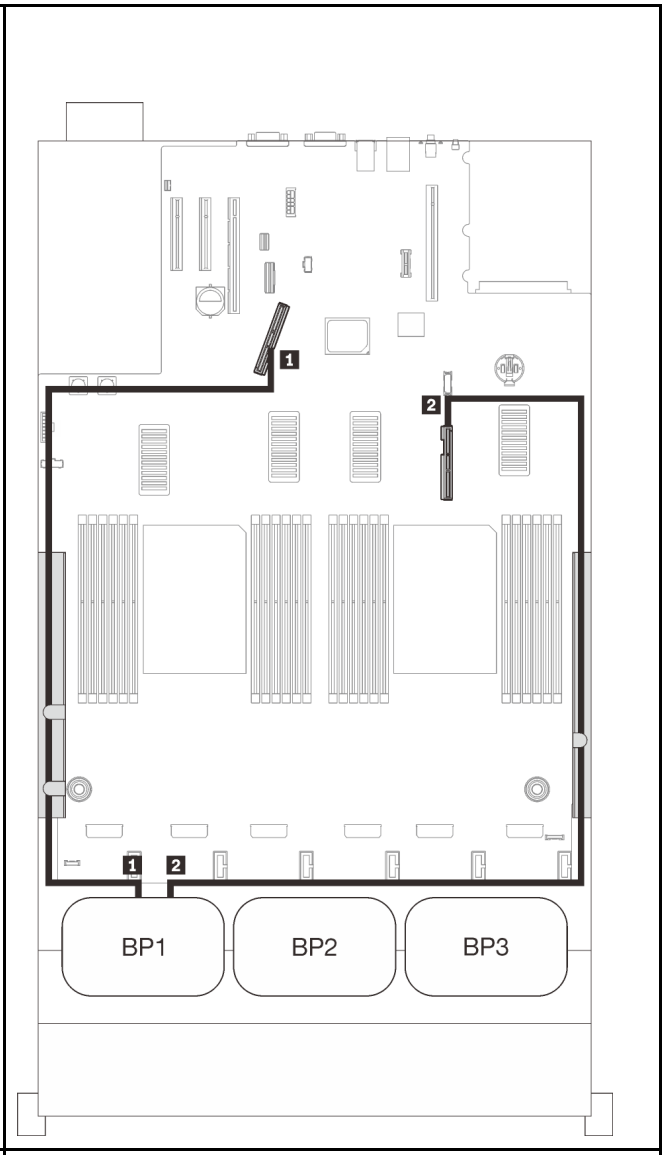

SAS/SATA cable routing			PCIe cable routing		
	Length	To	NVMe connector	Length	To
1	665 mm	C0 (16i)	1 0-1, 2-3	670 mm	PCIe 1 (on-board)
2	860 mm	C1 (16i)	2 4-5, 6-7	910 mm	PCIe 2 (on-board)
3	1000 mm	C0 (8i)			

With four processors

with four processors installed, the two PCIe connectors on the expansion tray are also available. Follow the instructions in this section to learn how do cable routing for combinations with one AnyBay backplane and these two connectors.

Note: See "Connecting cables to the processor and memory expansion tray" on page 46 to perform the procedure properly while connecting PCIe cables to the processor and memory expansion tray.

One backplane

One AnyBay backplane

On-board connector

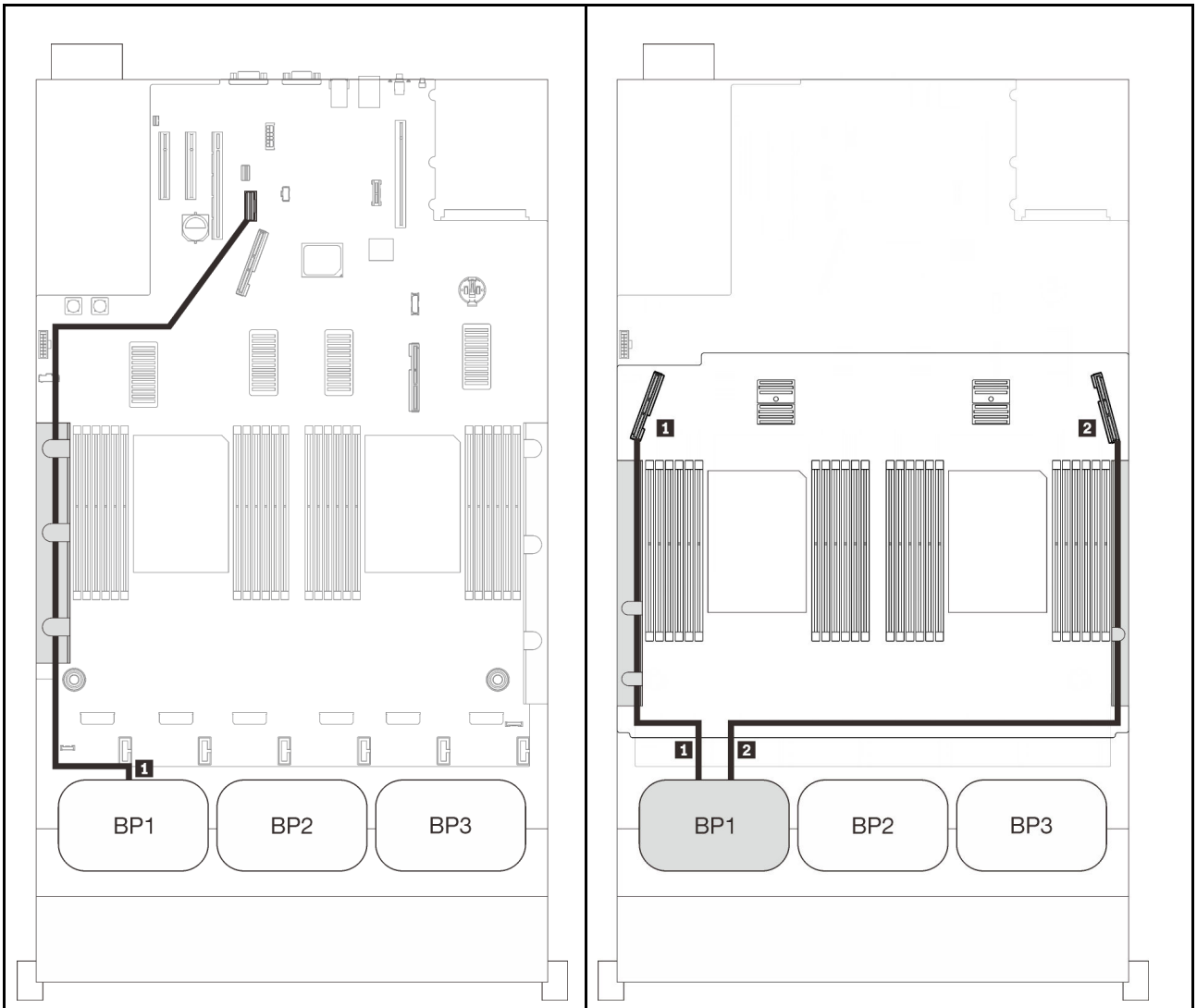

SAS/SATA cable routing			PCIe cable routing		
	Length	To	NVMe connector	Length	To
1	845 mm	On-board	1 0-1, 2-3	530 mm	PCIe 3 (tray)
			2 4-5, 6-7	670 mm	PCIe 6 (tray)

8i RAID adapter

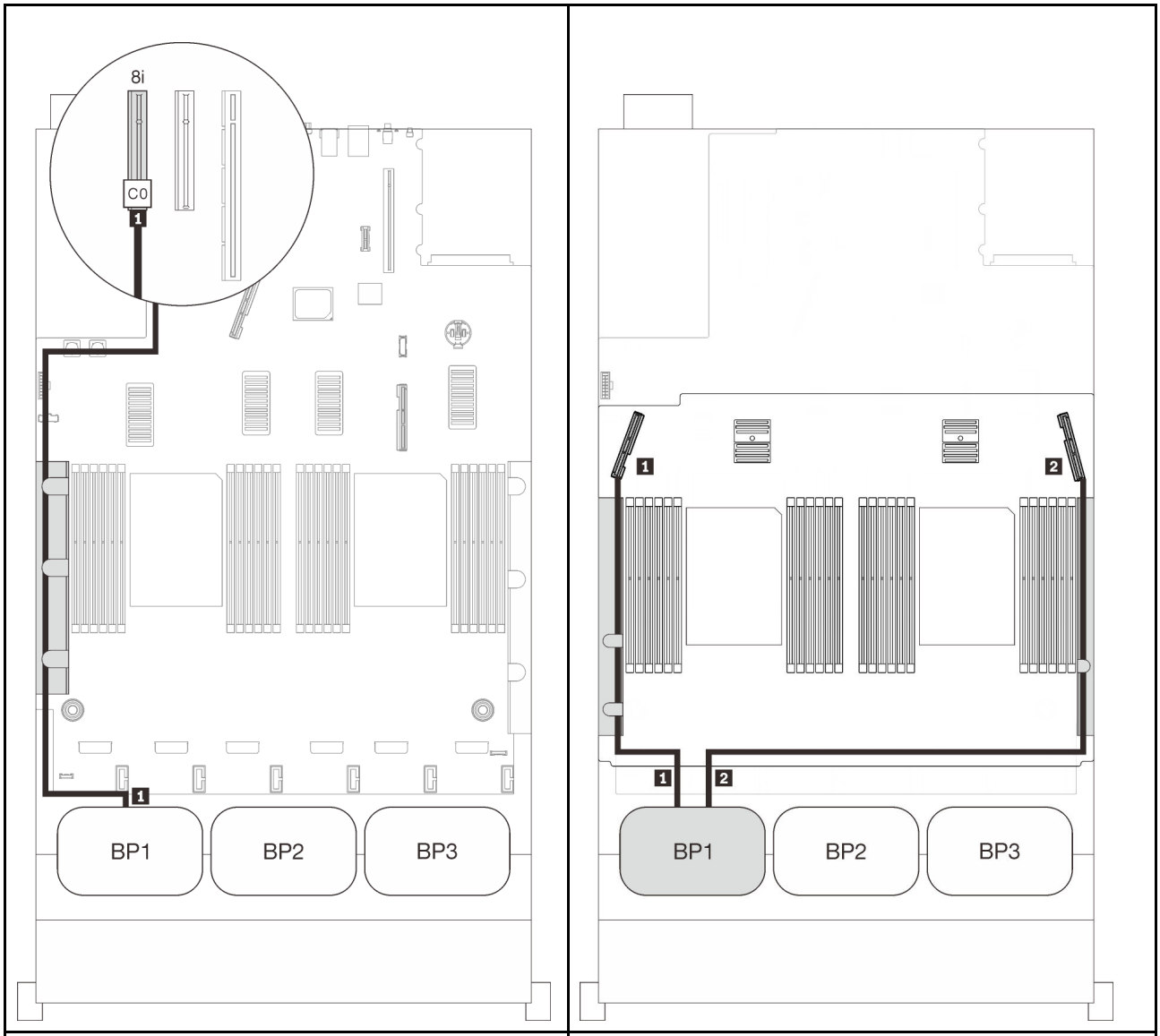

SAS/SATA cable routing			PCIe cable routing		
	Length	To	NVMe connector	Length	To
1	665 mm	C0 (8i)	1 0-1, 2-3	530 mm	PCIe 3 (tray)
			2 4-5, 6-7	670 mm	PCIe 6 (tray)

16i RAID adapter

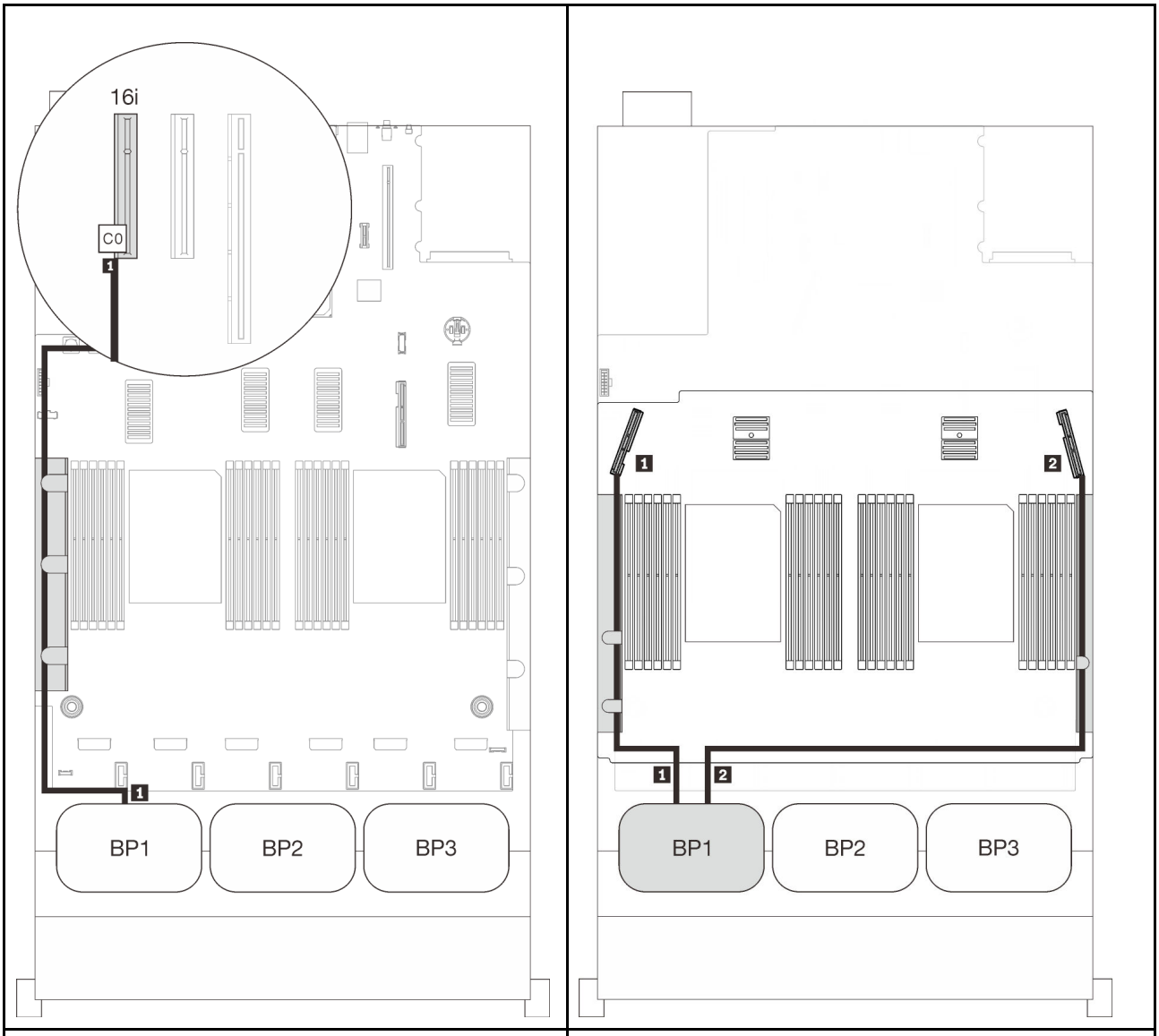

SAS/SATA cable routing			PCIe cable routing		
	Length	To	NVMe connector	Length	To
1	• Gen3: 665 mm • Gen4: 690 mm	C0 (16i)	1 0-1, 2-3	530 mm	PCIe 3 (tray)
			2 4-5, 6-7	670 mm	PCIe 6 (tray)

Two backplanes

One AnyBay and one SAS/SATA backplane

8i RAID adapter

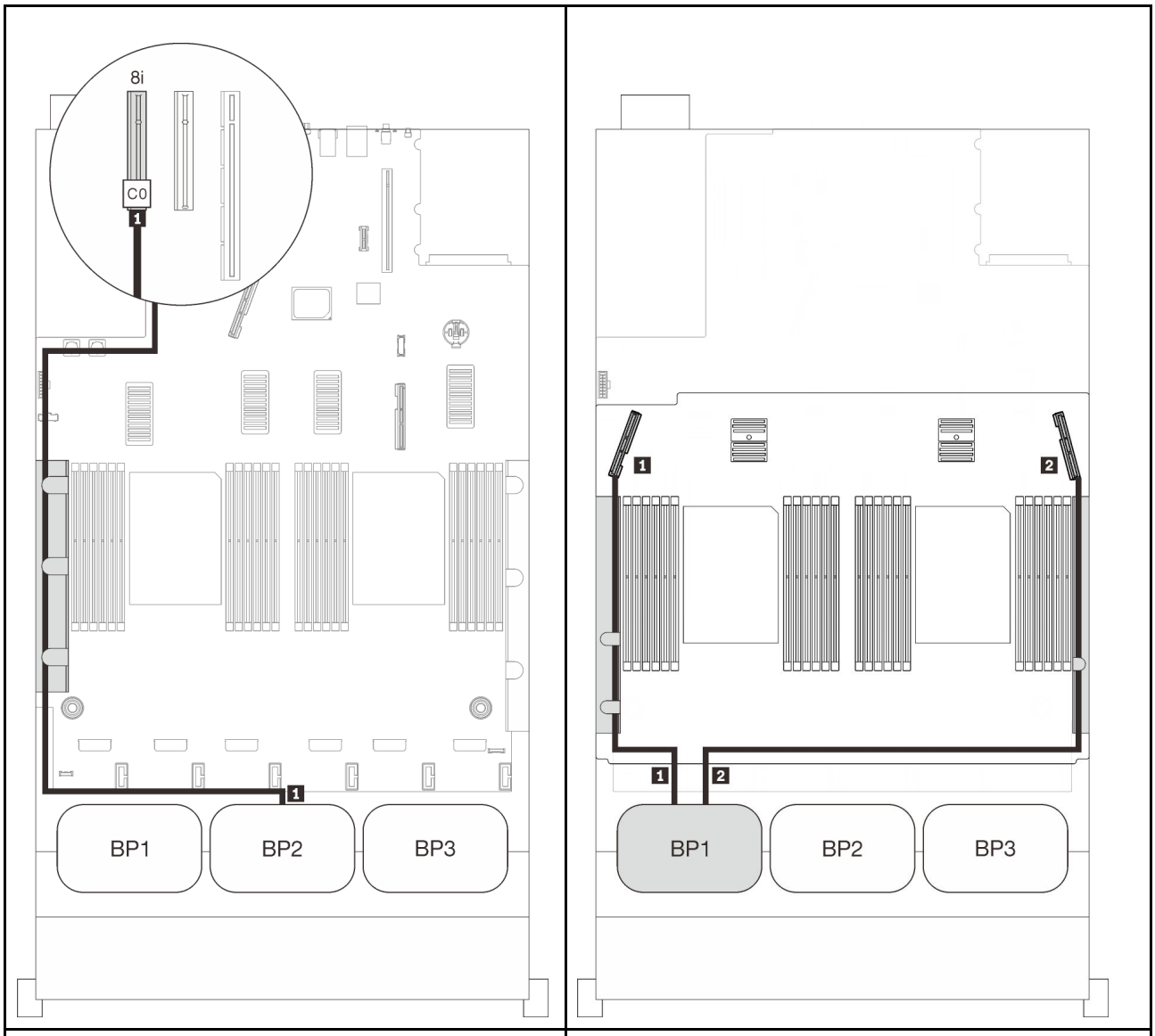

SAS/SATA cable routing			PCIe cable routing		
	Length	To	NVMe connector	Length	To
1	860 mm	C0 (8i)	1 0-1, 2-3	530 mm	PCIe 3 (tray)
			2 4-5, 6-7	670 mm	PCIe 6 (tray)

16i RAID adapter

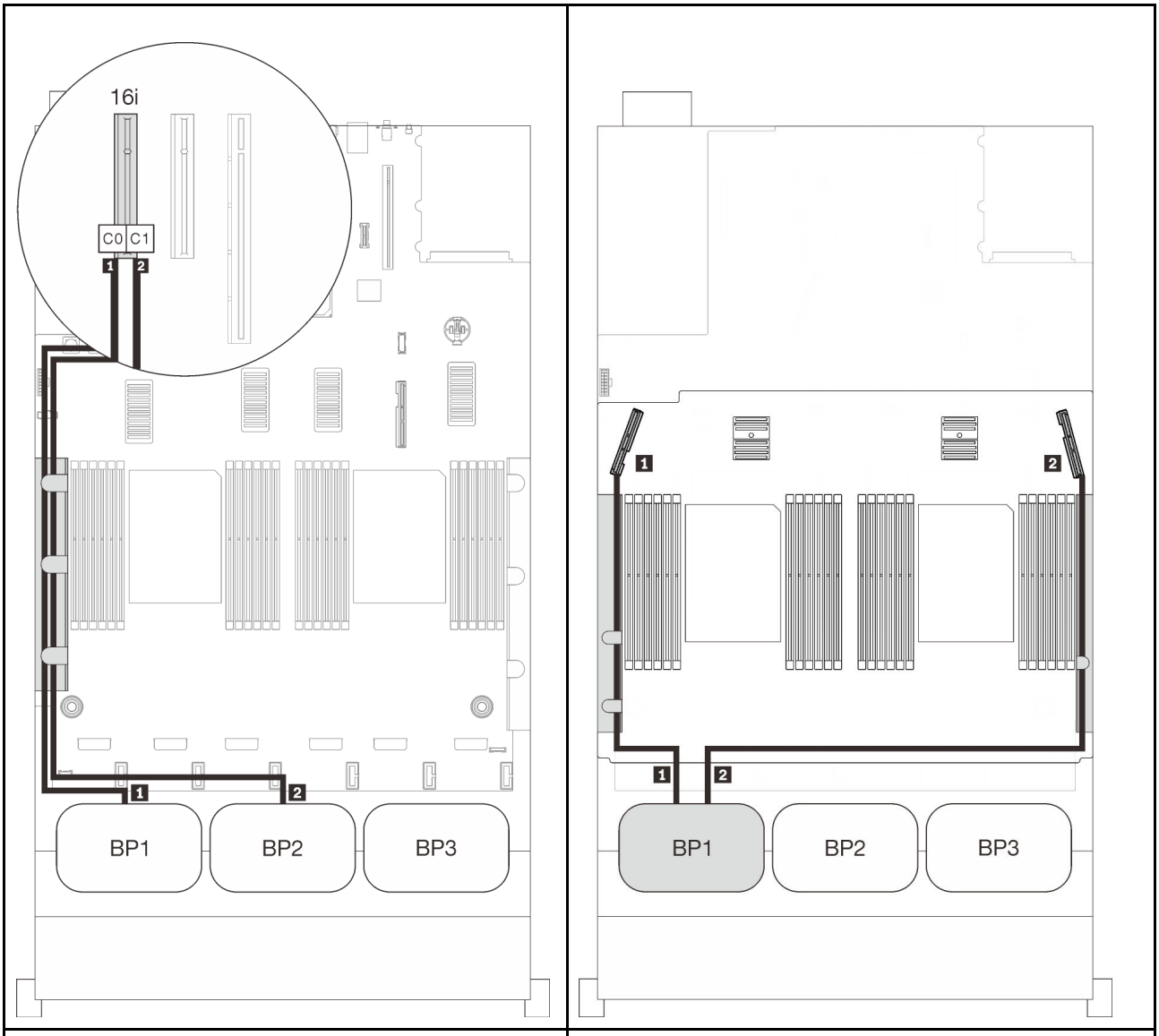

SAS/SATA cable routing			PCIe cable routing		
	Length	To	NVMe connector	Length	To
1	665 mm	C0 (16i)	1 0-1, 2-3	530 mm	PCIe 3 (tray)
2	860 mm	C1 (16i)	2 4-5, 6-7	670 mm	PCIe 6 (tray)

Three backplanes

One AnyBay and two SAS/SATA backplanes

On-board connector + 16i RAID adapter

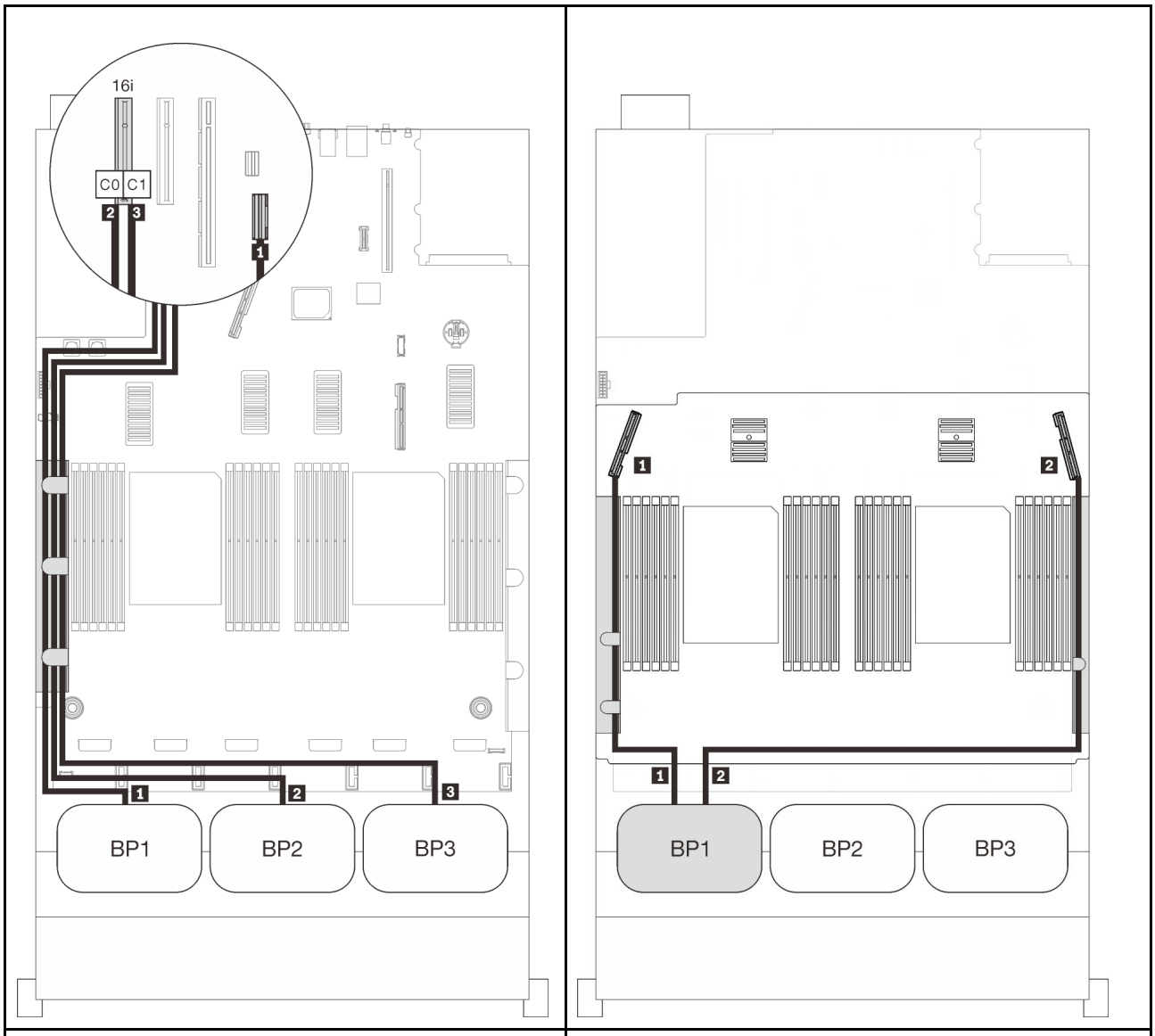

SAS/SATA cable routing			PCIe cable routing		
	Length	To	NVMe connector	Length	To
1	845 mm	On-board	1 0-1, 2-3	530 mm	PCIe 3 (tray)
2	860 mm	C0 (16i)	2 4-5, 6-7	670 mm	PCIe 6 (tray)
3	1000 mm	C1 (16i)			

8i + 16i RAID adapters

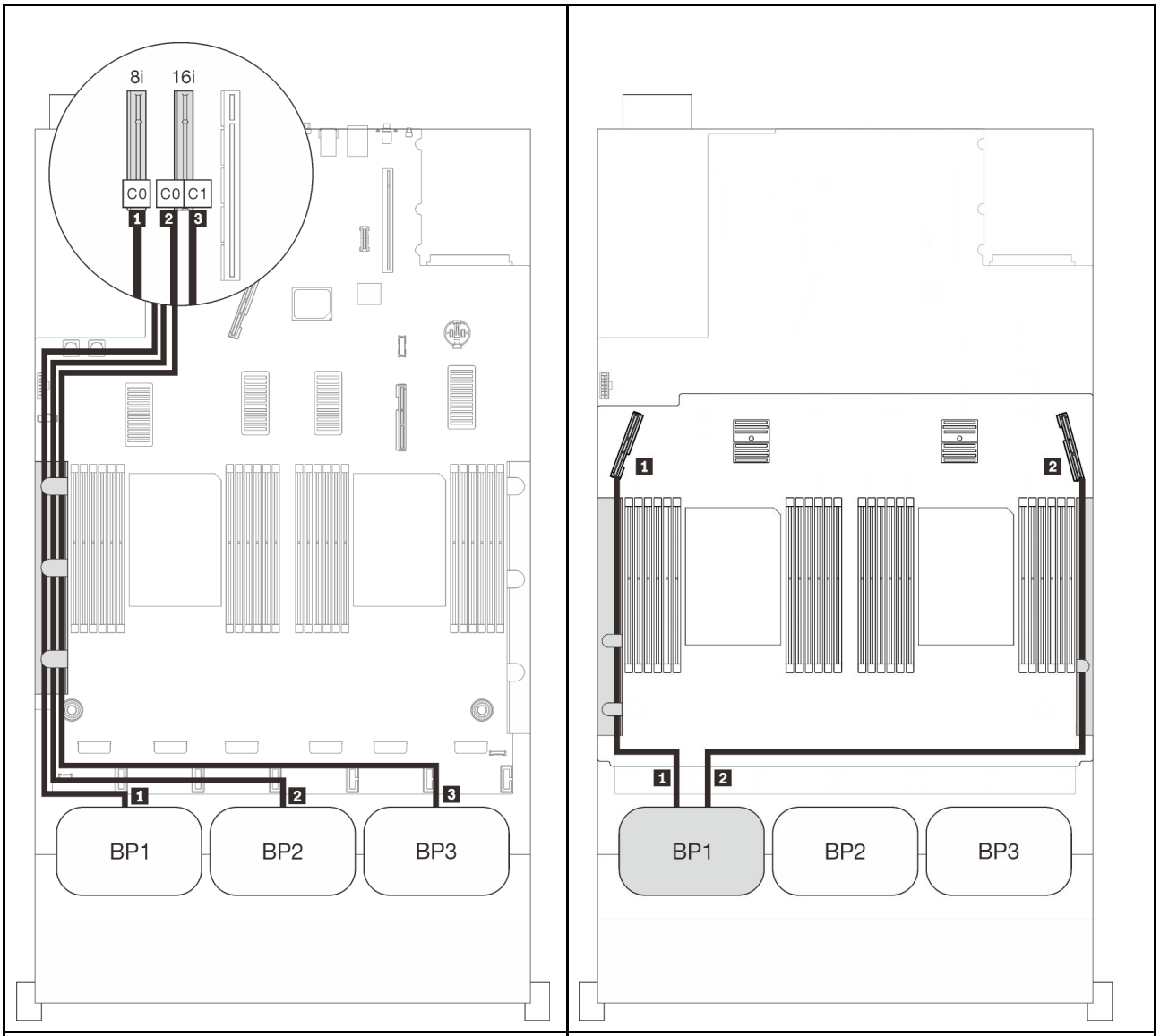

SAS/SATA cable routing			PCIe cable routing		
	Length	To	NVMe connector	Length	To
1	665 mm	On-board	1 0-1, 2-3	530 mm	PCIe 3 (tray)
2	860 mm	C0 (16i)	2 4-5, 6-7	670 mm	PCIe 6 (tray)
3	1000 mm	C1 (16i)			

32i RAID adapter

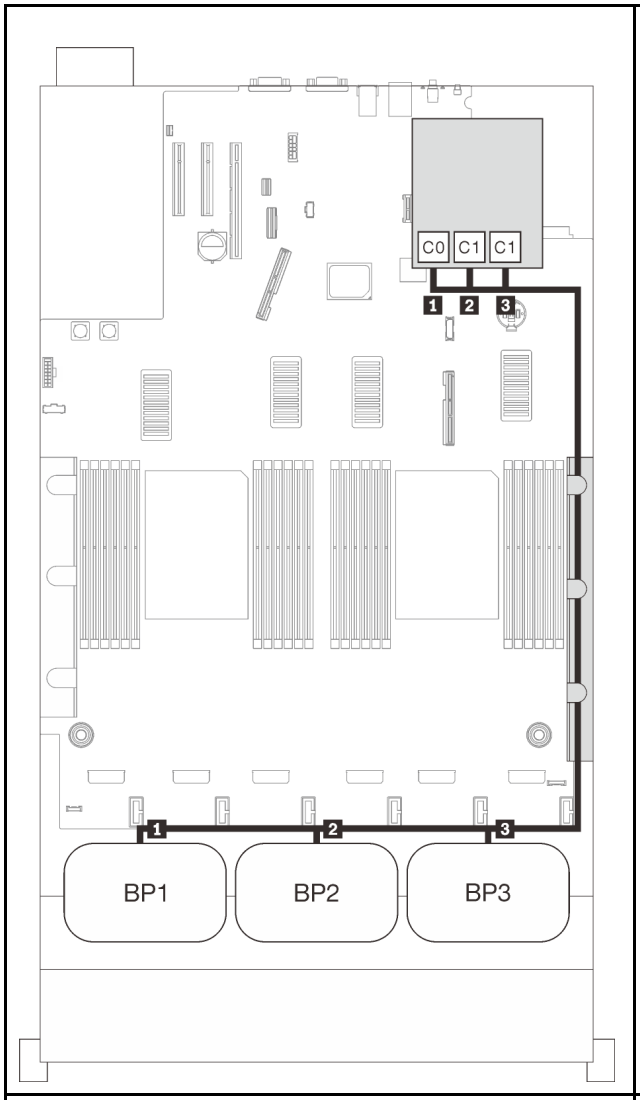

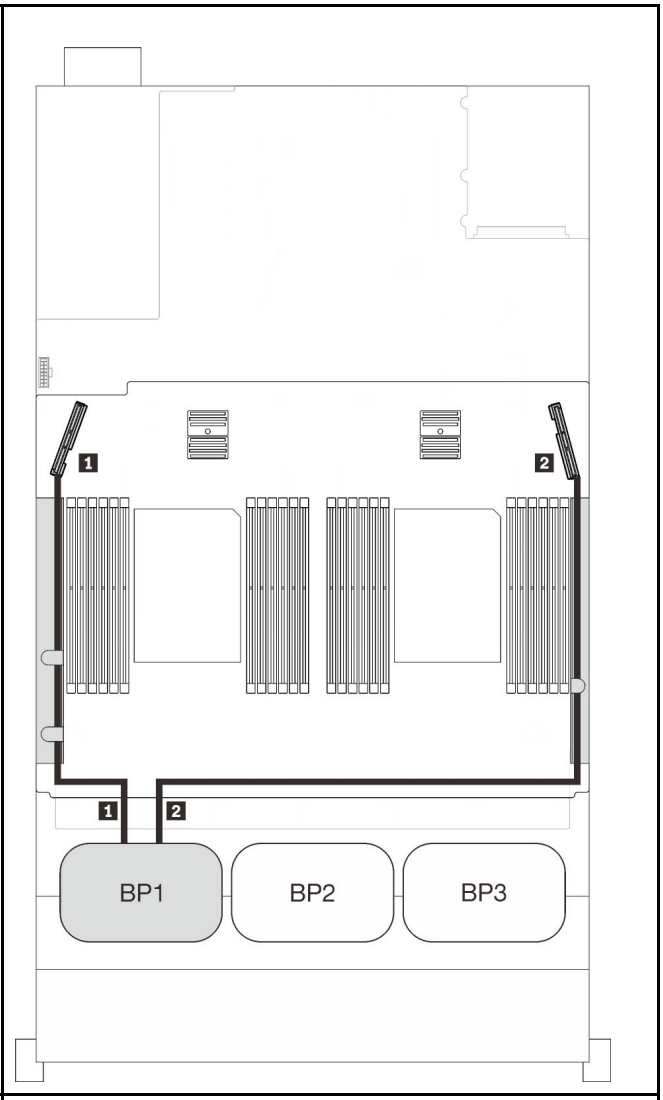

SAS/SATA cable routing			PCIe cable routing		
	Length	To	NVMe connector	Length	To
1	860 mm	C0 (32i)	1 0-1, 2-3	530 mm	PCIe 3 (tray)
2	690 mm	C1 (32i)	2 4-5, 6-7	670 mm	PCIe 6 (tray)
3	665 mm	C2 (32i)			

16i + 8i RAID adapter

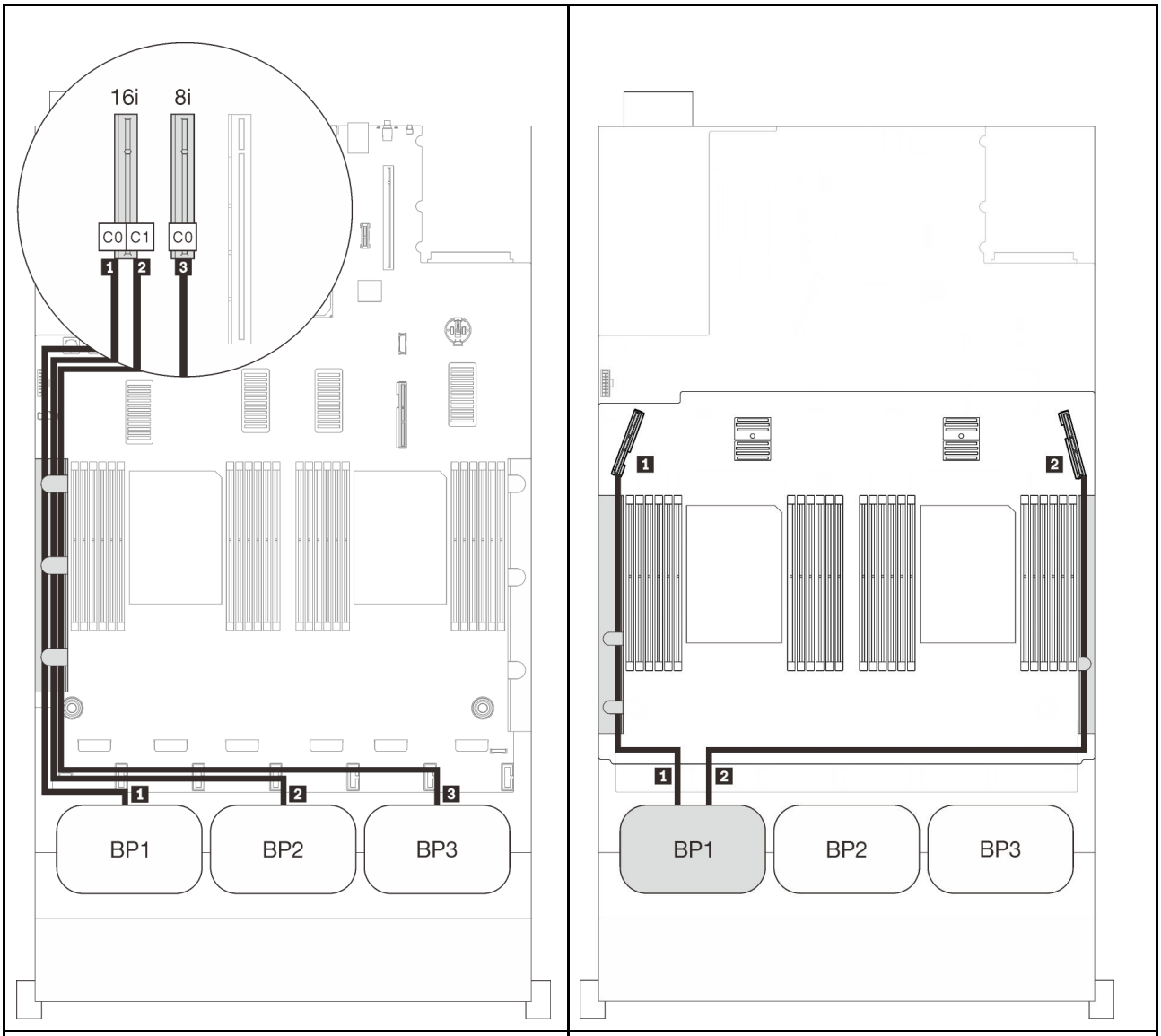

SAS/SATA cable routing			PCIe cable routing		
	Length	To	NVMe connector	Length	To
1	665 mm	C0 (16i)	1 0-1, 2-3	530 mm	PCIe 3 (tray)
2	860 mm	C1 (16i)	2 4-5, 6-7	670 mm	PCIe 6 (tray)
3	1000 mm	C0 (8i)			

Two-AnyBay-backplane combinations

Follow the instructions in this section to learn how do cable routing for combinations with two AnyBay backplanes.

Note: These combinations require four installed processors.

See the following sections for cable routing combinations with two AnyBay drive backplanes.

- "Without PCIe switch card" on page 86
  - "Two backplanes" on page 86
  - "Three backplanes" on page 88
- "With PCIe switch card" on page 92
  - "Two backplanes" on page 93
  - "Three backplanes" on page 94

Without PCIe switch card

Follow the instructions in this section to learn how do cable routing for combinations with two AnyBay backplanes and not PCIe switch card.

Note: See "Connecting cables to the processor and memory expansion tray" on page 46 to perform the procedure properly while connecting PCIe cables to the processor and memory expansion tray.

Two backplanes

Two AnyBay backplanes

16i RAID adapter

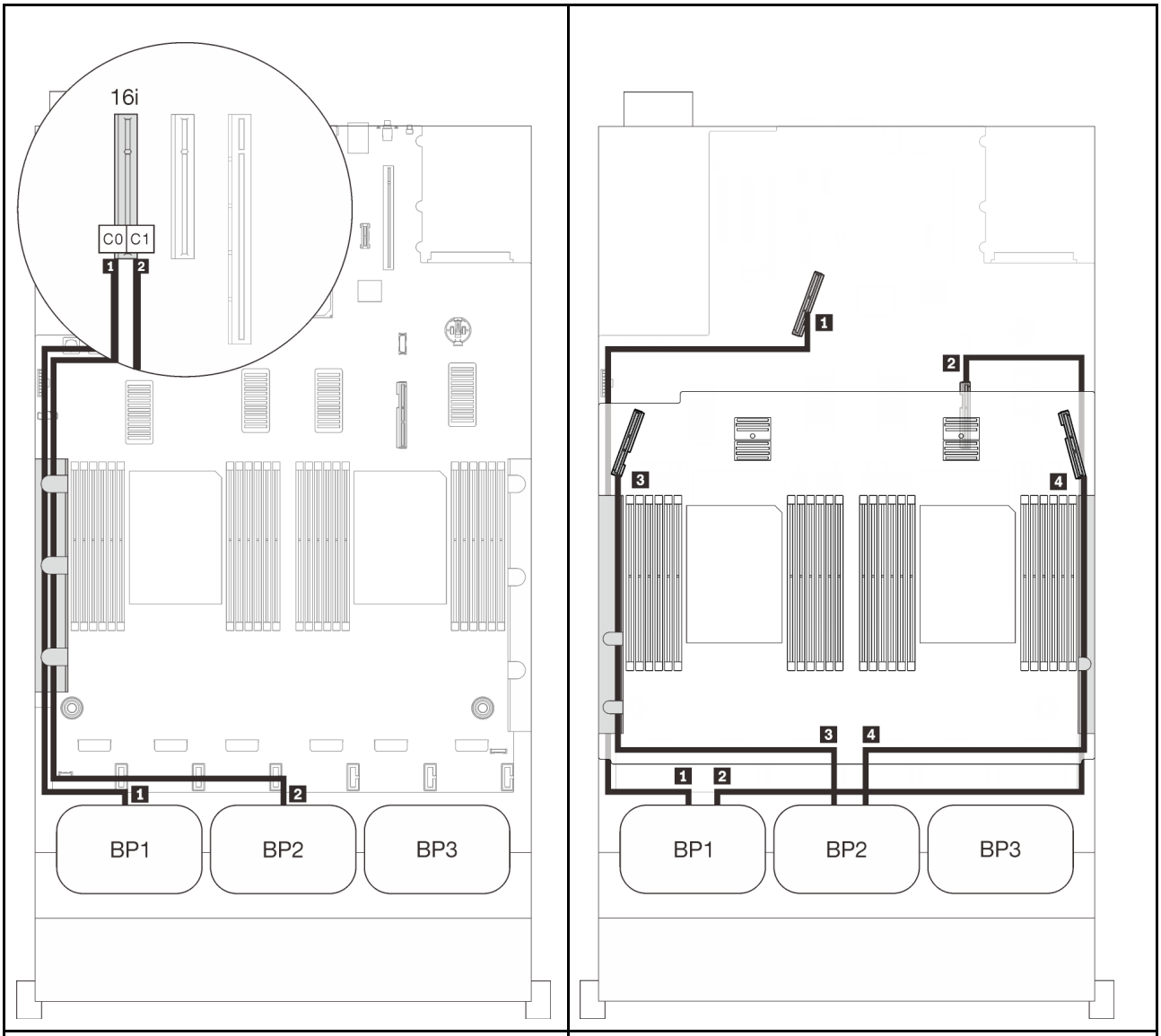

SAS/SATA cable routing			PCIe cable routing		
	Length	To	NVMe connector	Length	To
1	665 mm	C0 (16i)	1 0-1, 2-3	670 mm	PCIe 1 (on-board)
2	860 mm	C1 (16i)	2 4-5, 6-7	910 mm	PCIe 2 (on-board)
			3 0-1, 2-3	530 mm	PCIe 3 (tray)
			4 4-5, 6-7	670 mm	PCIe 6 (tray)

Three backplanes

Two AnyBay and one SAS/SATA backplane

On-board connector + 16i RAID adapter

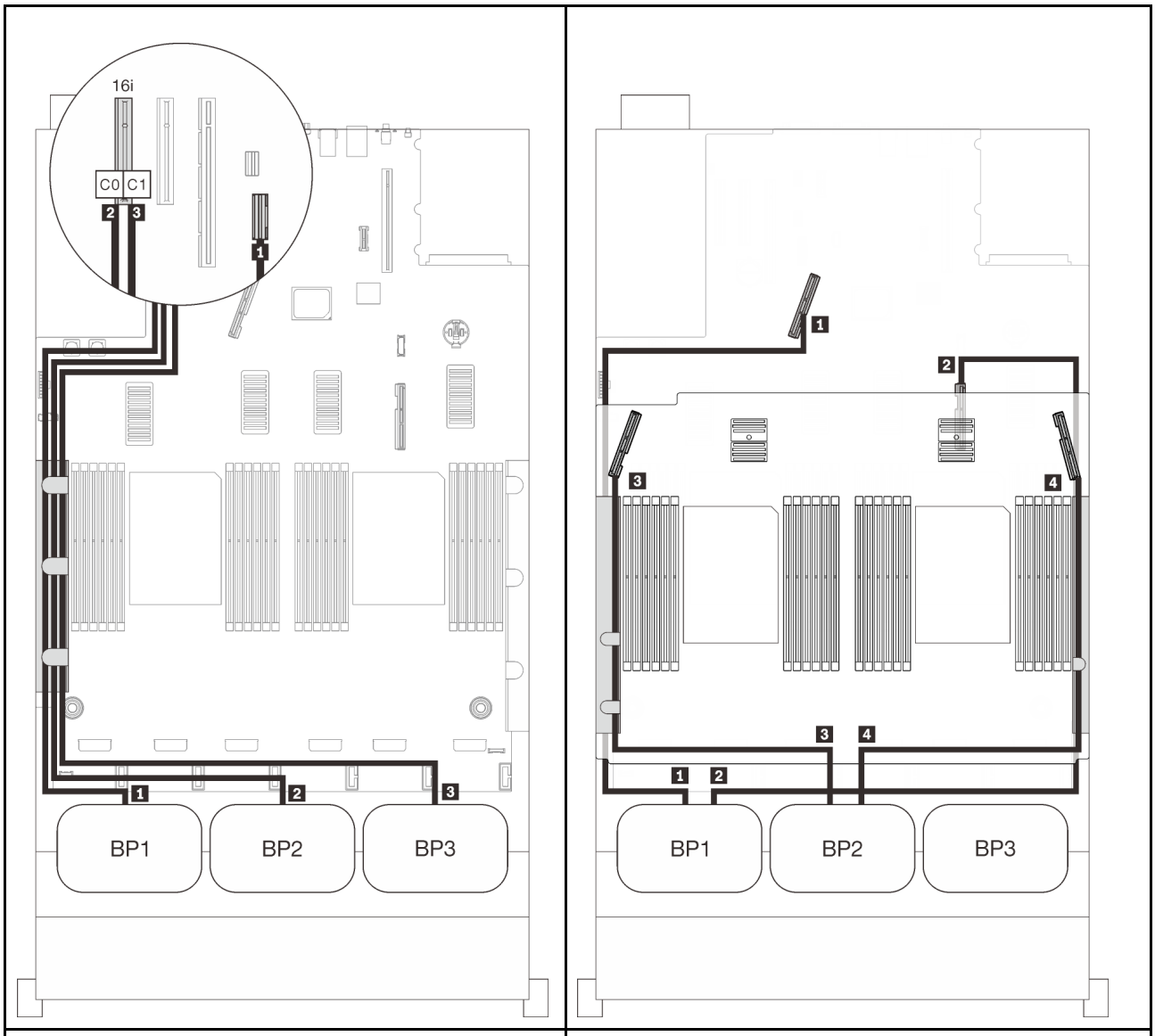

SAS/SATA cable routing			PCIe cable routing		
	Length	To	NVMe connector	Length	To
1	845 mm	On-board	1 0-1, 2-3	670 mm	PCIe 1 (on-board)
2	860 mm	C0 (16i)	2 4-5, 6-7	910 mm	PCIe 2 (on-board)
3	1000 mm	C1 (16i)	3 0-1, 2-3	530 mm	PCIe 3 (tray)
			4 4-5, 6-7	670 mm	PCIe 6 (tray)

8i + 16i RAID adapters

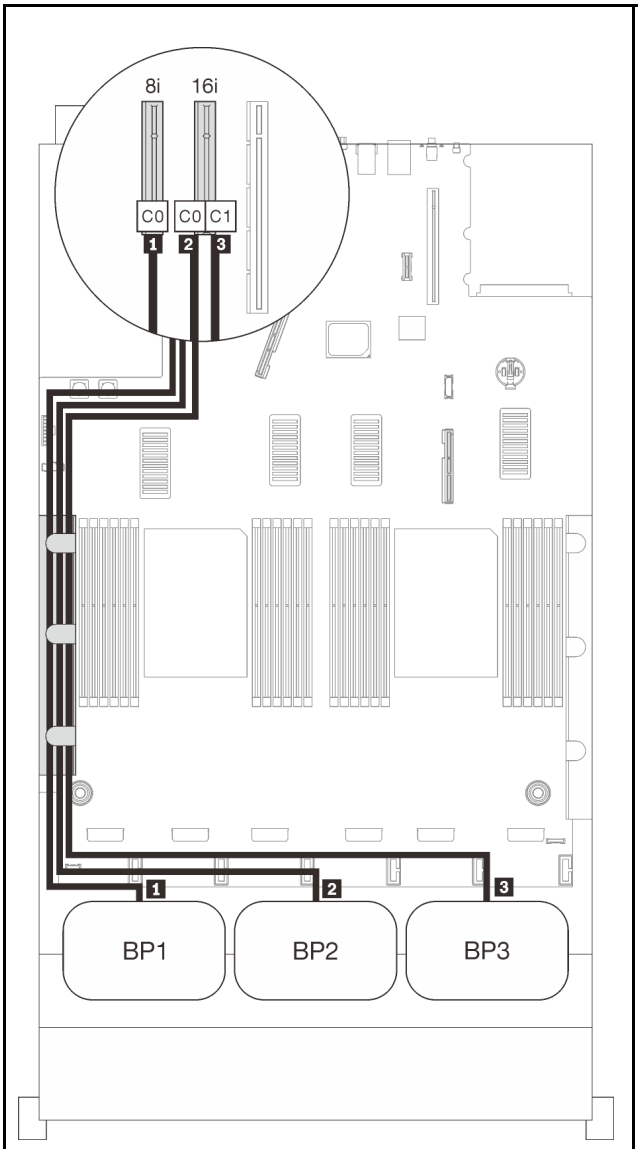

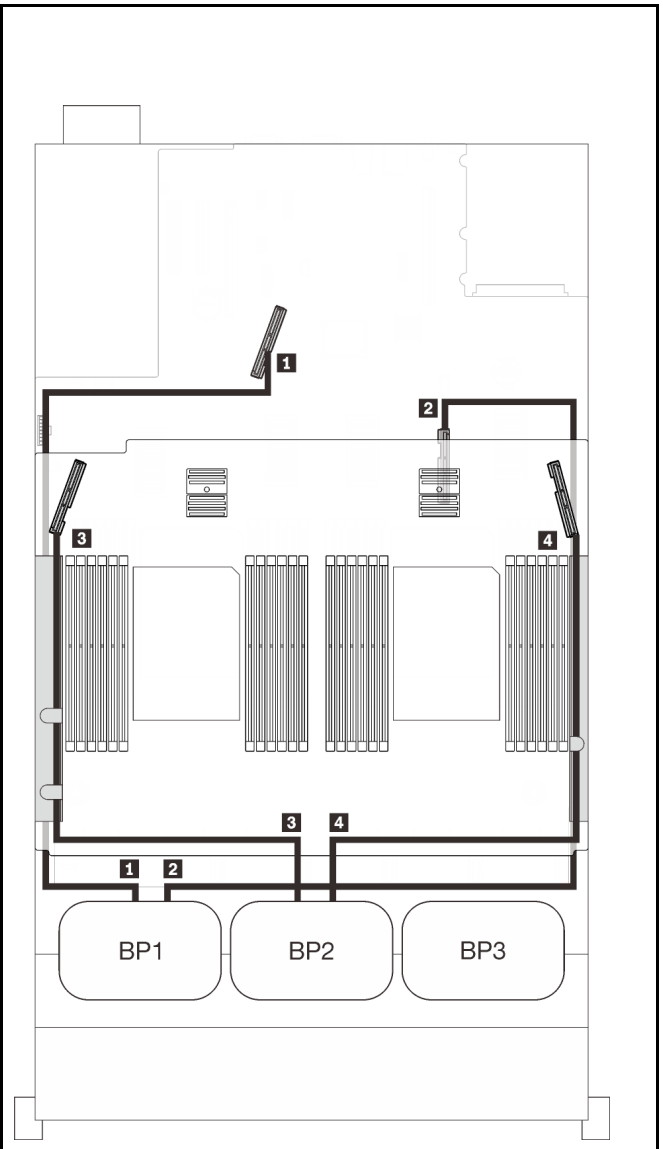

SAS/SATA cable routing			PCIe cable routing		
	Length	To	NVMe connector	Length	To
1	665 mm	C0 (8i)	1 0-1, 2-3	670 mm	PCIe 1 (on-board)
2	860 mm	C0 (16i)	2 4-5, 6-7	910 mm	PCIe 2 (on-board)
3	1000 mm	C1 (16i)	3 0-1, 2-3	530 mm	PCIe 3 (tray)
			4 4-5, 6-7	670 mm	PCIe 6 (tray)

32i RAID adapter

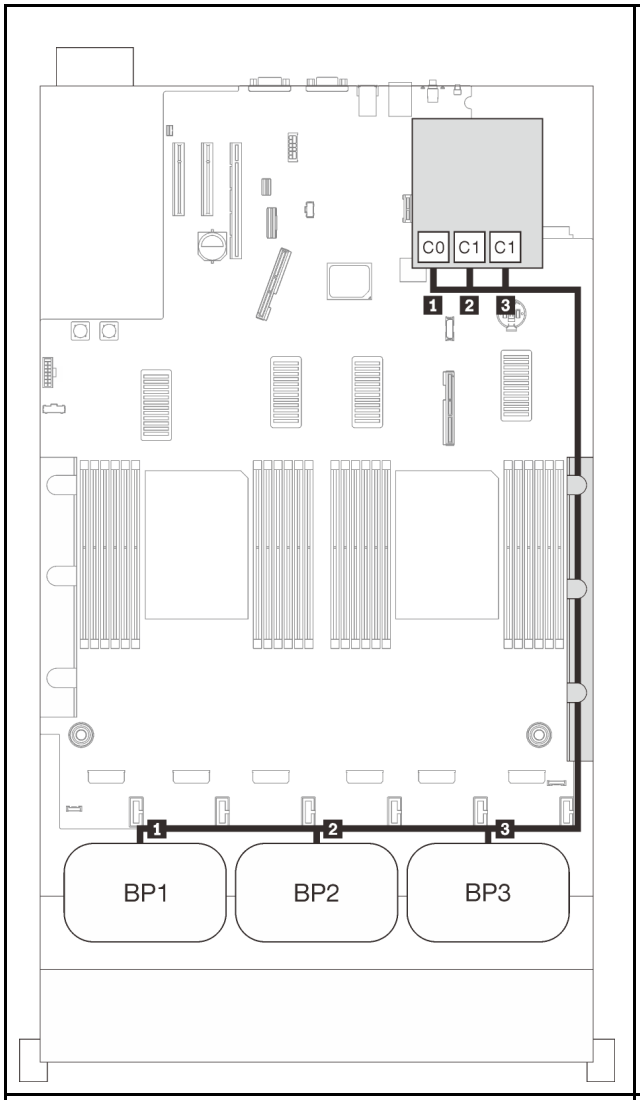

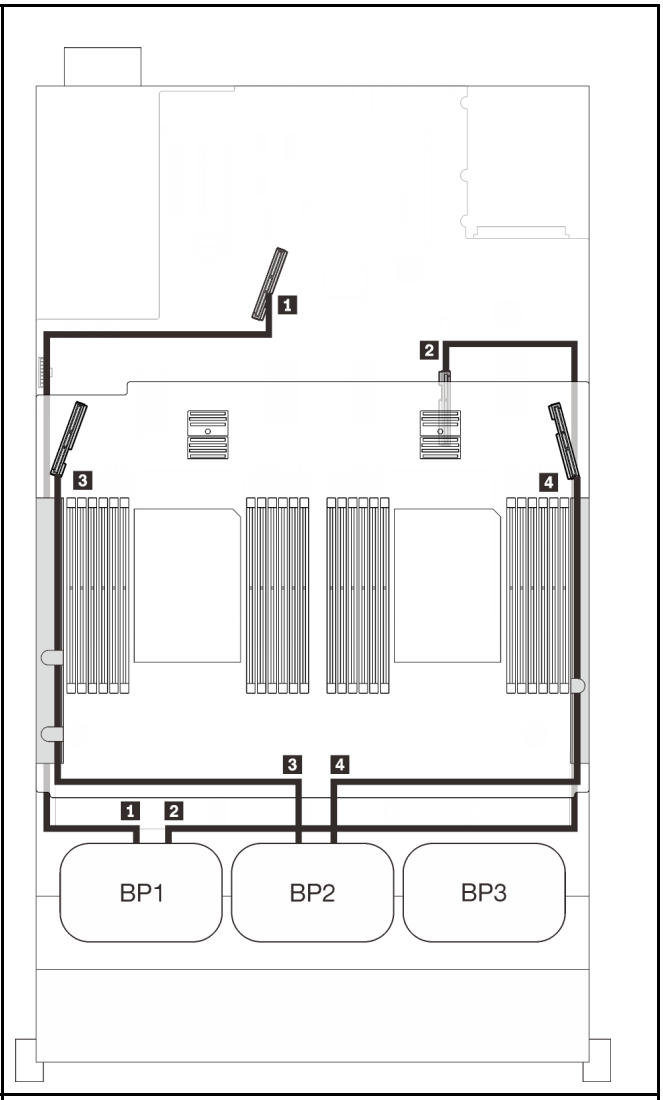

SAS/SATA cable routing			PCIe cable routing		
	Length	To	NVMe connector	Length	To
1	860 mm	C0 (32i)	1 0-1, 2-3	670 mm	PCIe 1 (on-board)
2	690 mm	C1 (32i)	2 4-5, 6-7	910 mm	PCIe 2 (on-board)
3	665 mm	C2 (32i)	3 0-1, 2-3	530 mm	PCIe 3 (tray)
			4 4-5, 6-7	670 mm	PCIe 6 (tray)

16i + 8i RAID adapter

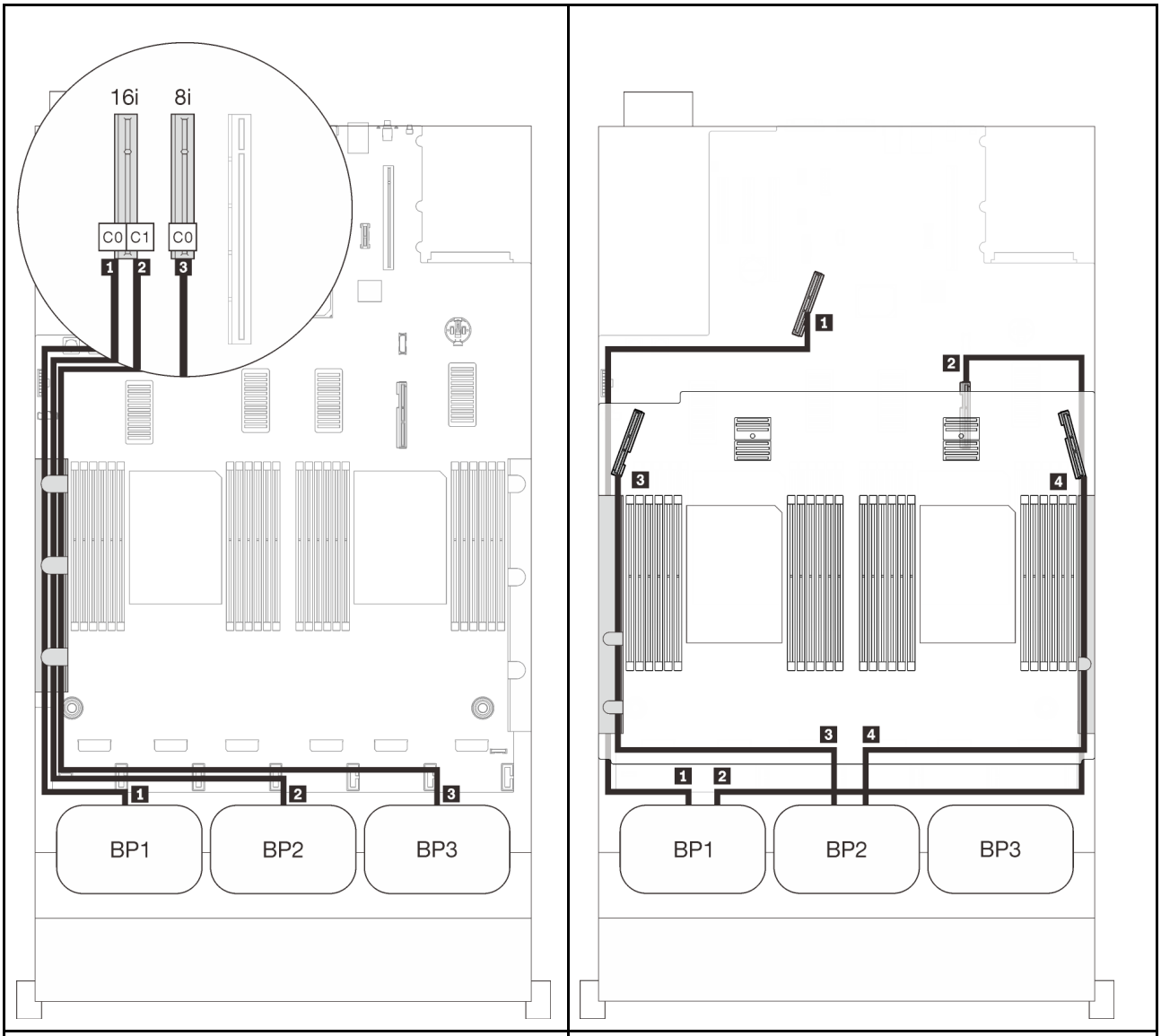

SAS/SATA cable routing			PCIe cable routing		
	Length	To	NVMe connector	Length	To
1	665 mm	C0 (16i)	1 0-1, 2-3	670 mm	PCIe 1 (on-board)
2	860 mm	C1 (16i)	2 4-5, 6-7	910 mm	PCIe 2 (on-board)
3	1000 mm	C0 (8i)	3 0-1, 2-3	530 mm	PCIe 3 (tray)
			4 4-5, 6-7	670 mm	PCIe 6 (tray)

With PCIe switch card

With one PCIe switch card installed, there is one more option for NVMe cable connection. Follow the instructions in this section to learn how do cable routing for combinations with two AnyBay backplanes and a PCIe switch card.

Notes:

- See "Connecting cables to the processor and memory expansion tray" on page 46 to perform the procedure properly while connecting PCIe cables to the processor and memory expansion tray.
- See "Connecting cables to the NVMe switch cards" on page 48 to perform the procedure properly while connecting PCIe cables to the PCIe switch cards.

Two backplanes

Two AnyBay backplanes

16i RAID adapter

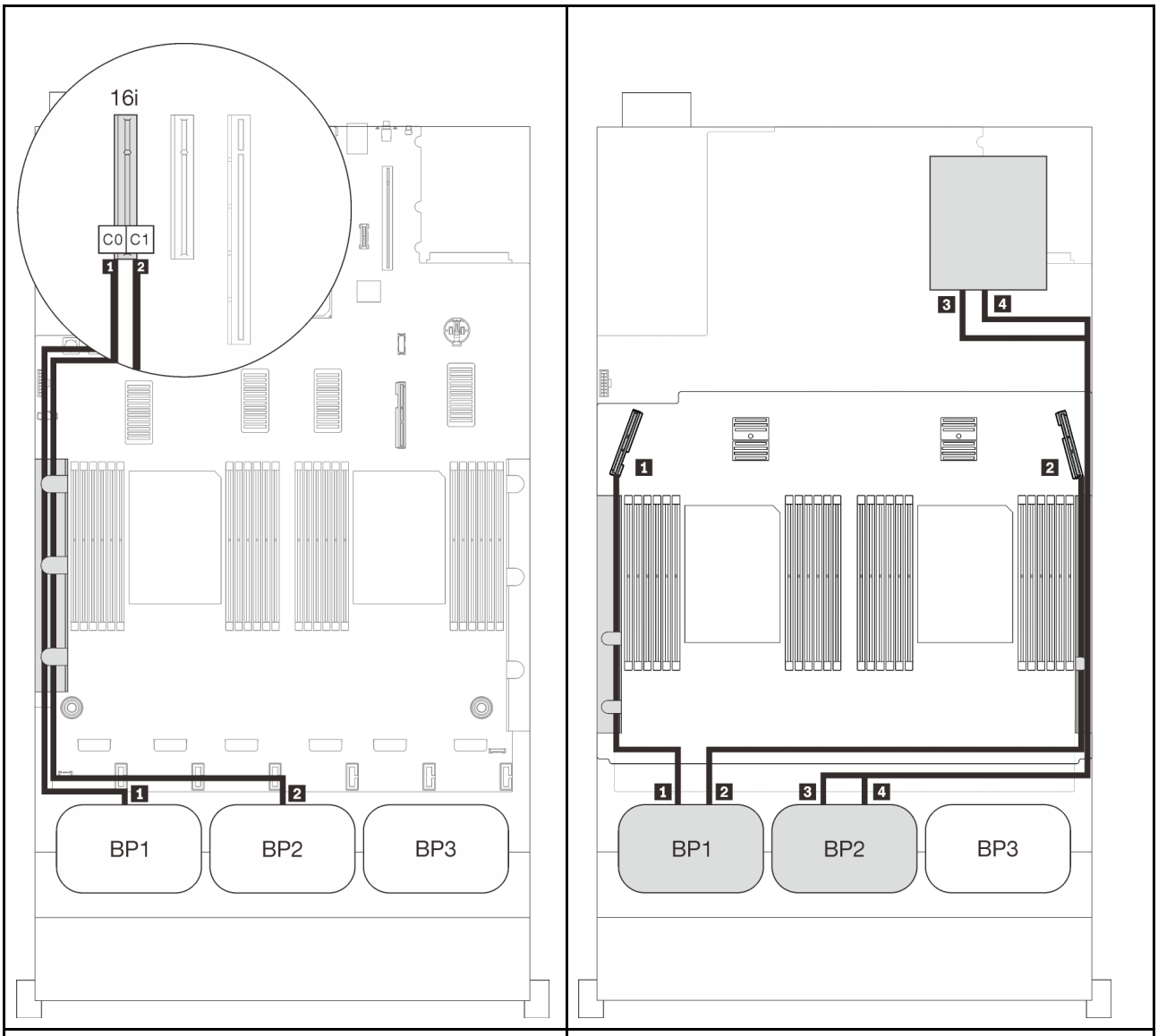

SAS/SATA cable routing			PCIe cable routing		
	Length	To	NVMe connector	Length	To
1	665 mm	C0 (16i)	1 0-1, 2-3	530 mm	PCIe 3 (tray)
2	860 mm	C1 (16i)	2 4-5, 6-7	670 mm	PCIe 6 (tray)
			3 0-1, 2-3	1100 mm	C0, C1 (Slot 5)
			4 4-5, 6-7	1100 mm	C0, C1 (Slot 6)

Three backplanes

Two AnyBay and one SAS/SATA backplane

On-board connector + 16i RAID adapter

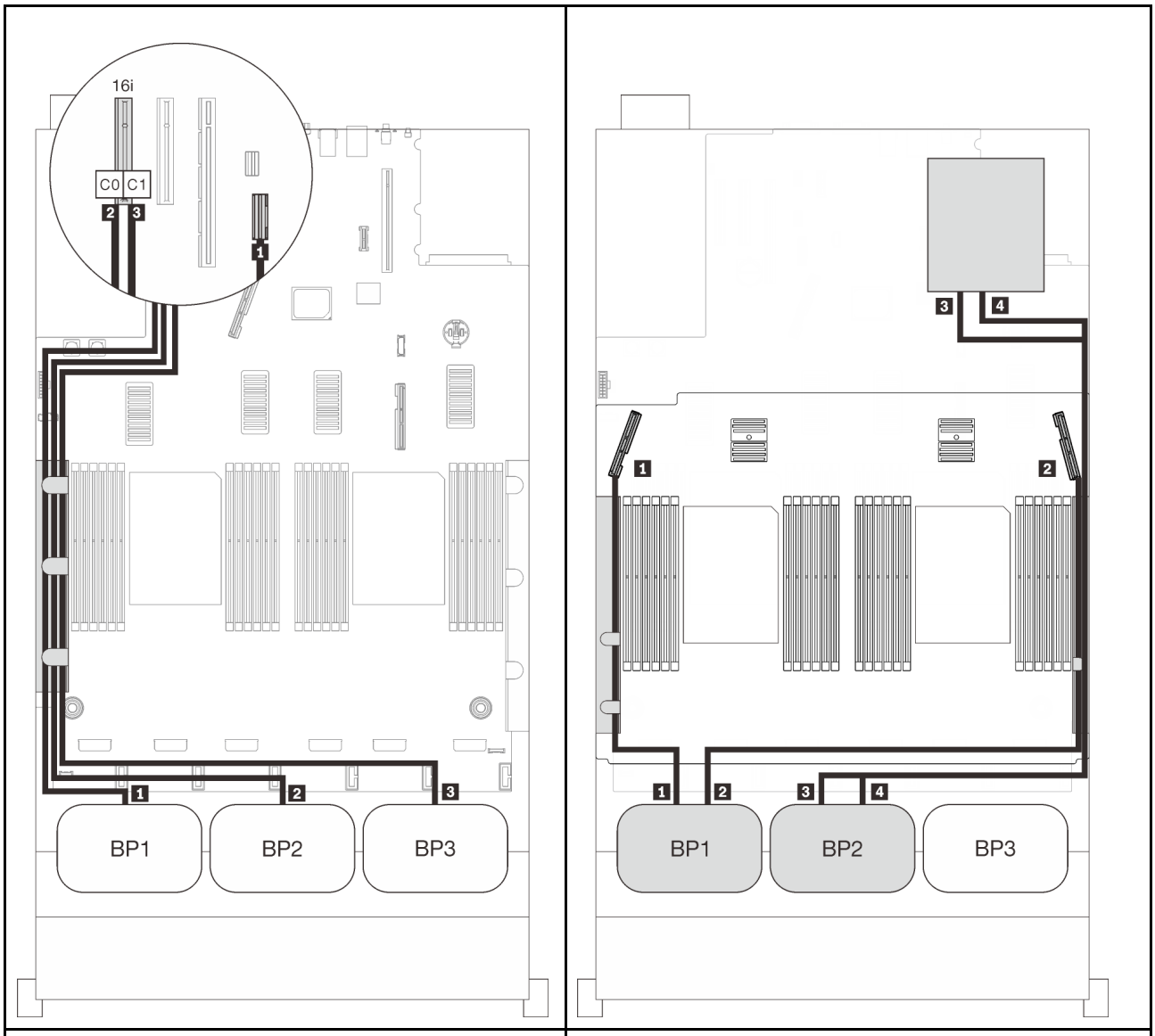

SAS/SATA cable routing			PCIe cable routing		
	Length	To	NVMe connector	Length	To
1	845 mm	On-board	1 0-1, 2-3	530 mm	PCIe 3 (tray)
2	860 mm	C0 (16i)	2 4-5, 6-7	670 mm	PCIe 6 (tray)
3	1000 mm	C1 (16i)	3 0-1, 2-3	1100 mm	C0, C1 (Slot 5)
			4 4-5, 6-7	1100 mm	C0, C1 (Slot 6)

8i + 16i RAID adapters

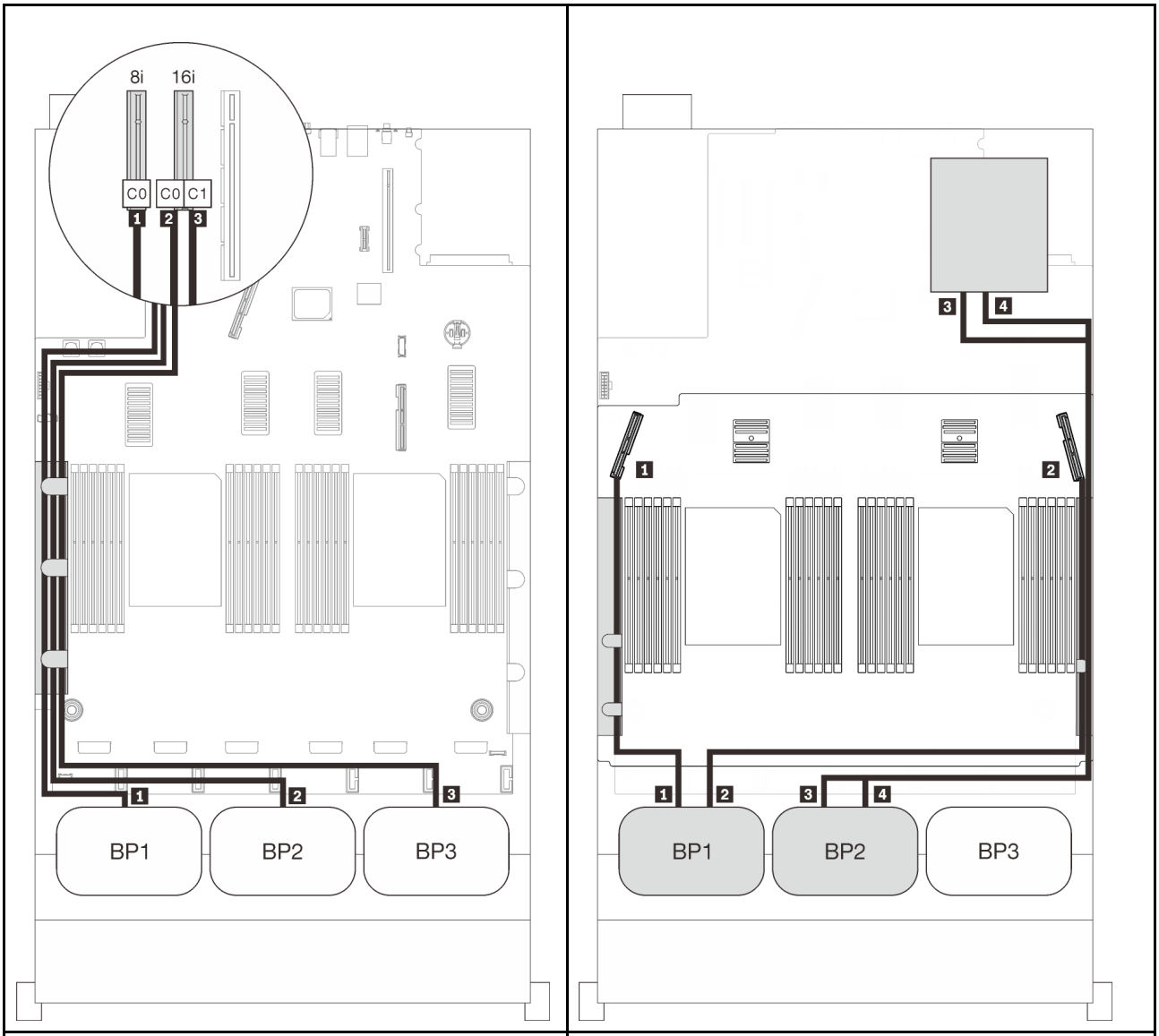

SAS/SATA cable routing			PCIe cable routing		
	Length	To	NVMe connector	Length	To
1	665 mm	C0 (8i)	1 0-1, 2-3	530 mm	PCIe 3 (tray)
2	860 mm	C0 (16i)	2 4-5, 6-7	670 mm	PCIe 6 (tray)
3	1000 mm	C1 (16i)	3 0-1, 2-3	1100 mm	C0, C1 (Slot 5)
			4 4-5, 6-7	1100 mm	C0, C1 (Slot 6)

32i RAID adapter

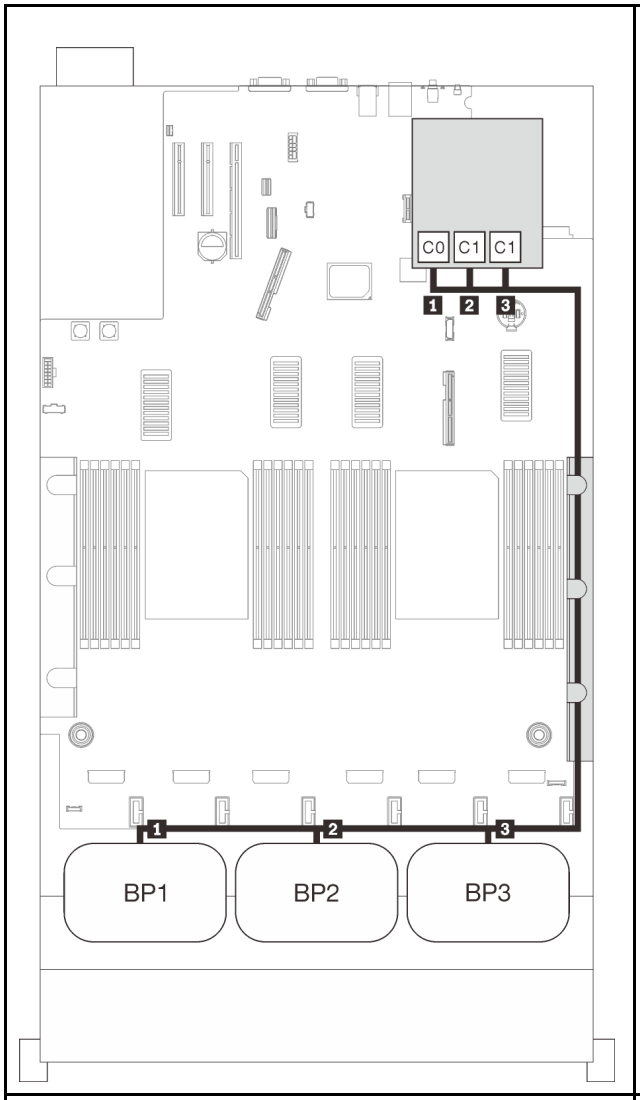

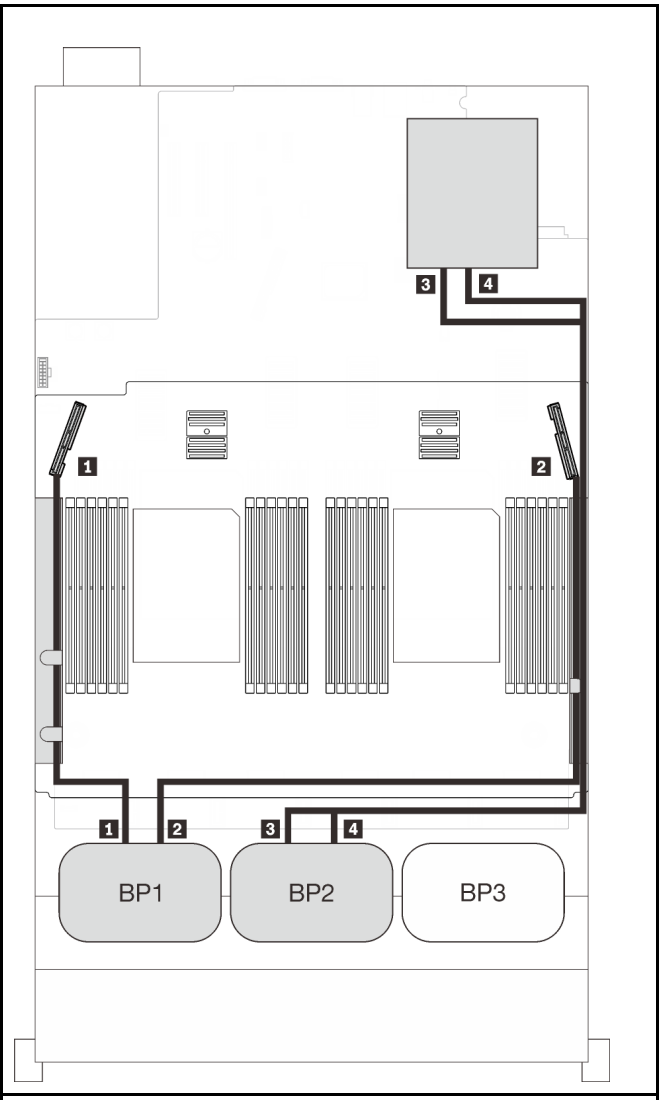

SAS/SATA cable routing			PCIe cable routing		
	Length	To	NVMe connector	Length	To
1	860 mm	C0 (32i)	1 0-1, 2-3	530 mm	PCIe 3 (tray)
2	690 mm	C1 (32i)	2 4-5, 6-7	670 mm	PCIe 6 (tray)
3	665 mm	C2 (32i)	3 0-1, 2-3	1100 mm	C0, C1 (Slot 5)
			4 4-5, 6-7	1100 mm	C0, C1 (Slot 6)

16i + 8i RAID adapter

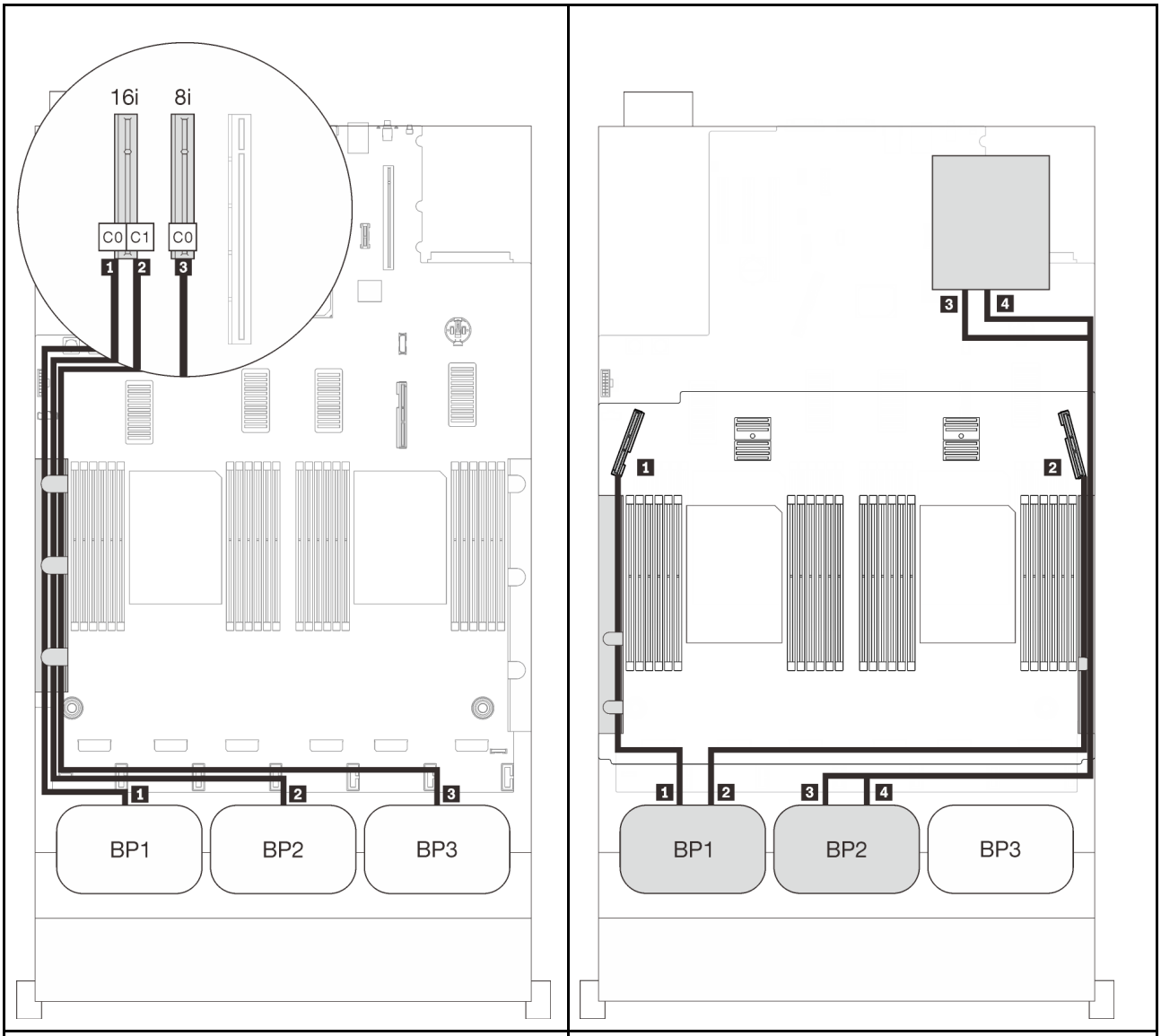

SAS/SATA cable routing			PCIe cable routing		
	Length	To	NVMe connector	Length	To
1	665 mm	C0 (16i)	1 0-1, 2-3	530 mm	PCIe 3 (tray)
2	860 mm	C1 (16i)	2 4-5, 6-7	670 mm	PCIe 6 (tray)
3	1000 mm	C0 (8i)	3 0-1, 2-3	1100 mm	C0, C1 (Slot 5)
			4 4-5, 6-7	1100 mm	C0, C1 (Slot 6)

Three-AnyBay-backplane combinations

Follow the instructions in this section to learn how do cable routing for combinations with three AnyBay backplanes.

Notes:

- These combinations require four installed processors.
- See “Connecting cables to the processor and memory expansion tray” on page 46 to perform the procedure properly while connecting PCIe cables to the processor and memory expansion tray.
- See “Connecting cables to the NVMe switch cards” on page 48 to perform the procedure properly while connecting PCIe cables to the PCIe switch cards.

See the following sections for cable routing combinations with three AnyBay drive backplanes.

Three backplanes

Three AnyBay backplanes

On-board connector + 16i RAID adapter

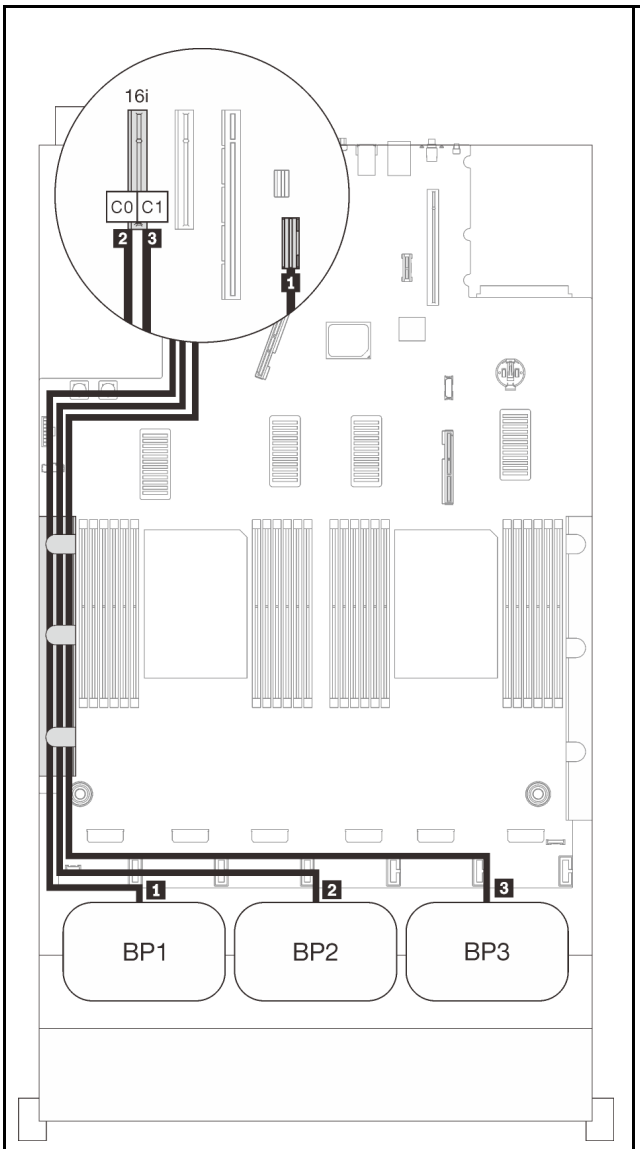

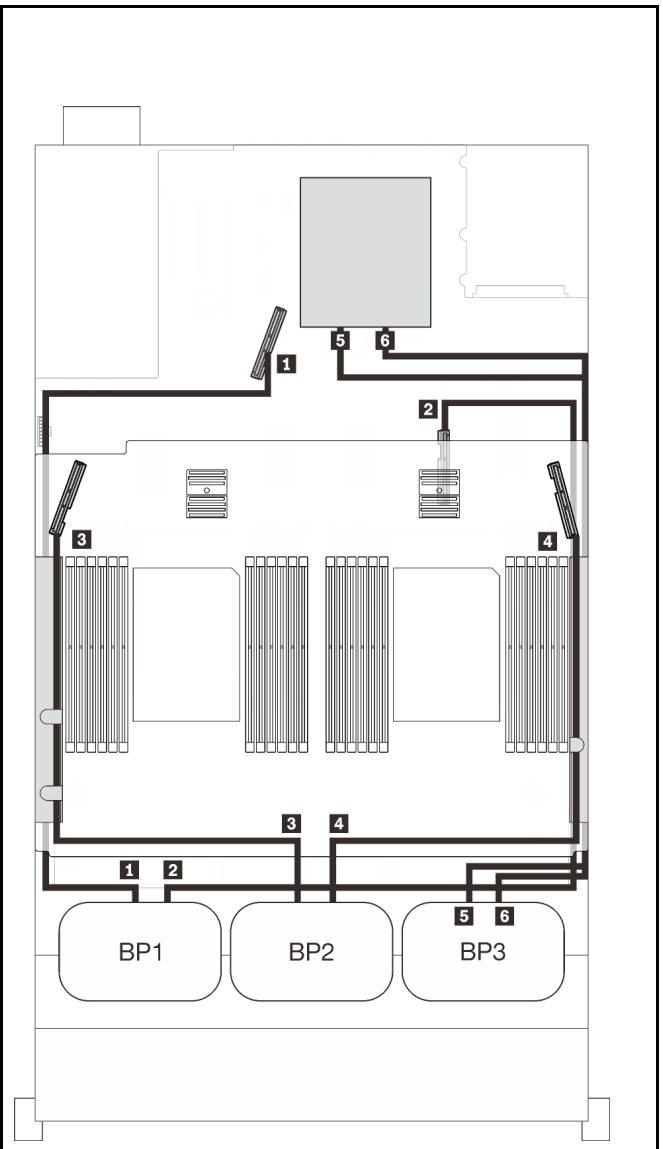

SAS/SATA cable routing			PCIe cable routing		
	Length	To	NVMe connector	Length	To
1	845 mm	on-board	1 0-1, 2-3	670 mm	PCIe 1 (on-board)
2	860 mm	C0 (16i)	2 4-5, 6-7	910 mm	PCIe 2 (on-board)
3	1000 mm	C1	3 0-1, 2-3	530 mm	PCIe 3 (tray)
			4 4-5, 6-7	670 mm	PCIe 6 (tray)
			5 0-1, 2-3	1100 mm	C0, C1 (Slot 5)
			6 4-5, 6-7	1100 mm	C0, C1 (Slot 6)

8i + 16i RAID adapters

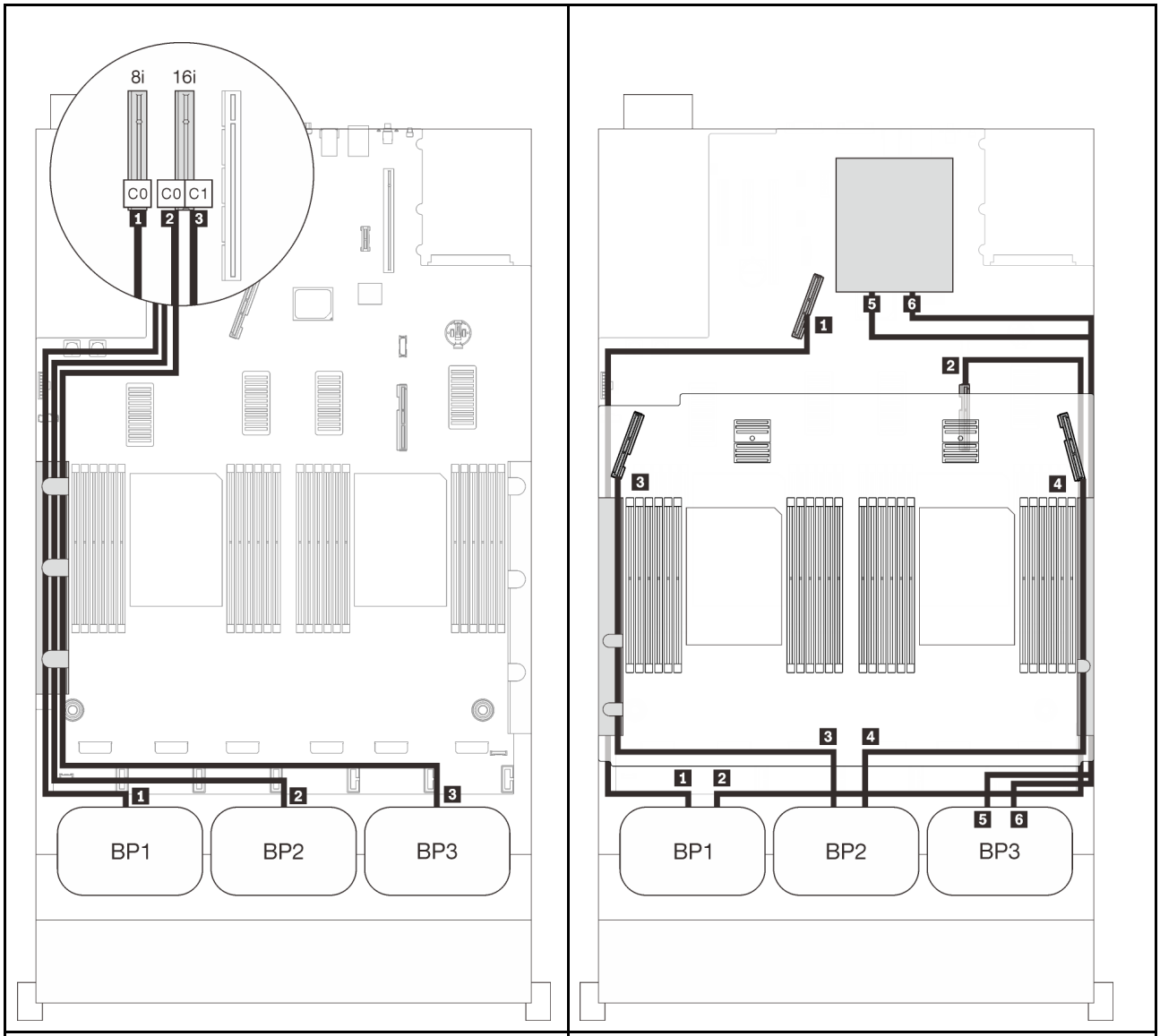

SAS/SATA cable routing			PCIe cable routing		
	Length	To	NVMe connector	Length	To
1	665 mm	on-board	1 0-1, 2-3	670 mm	PCIe 1 (on-board)
2	860 mm	C0 (16i)	2 4-5, 6-7	910 mm	PCIe 2 (on-board)
3	1000 mm	C1	3 0-1, 2-3	530 mm	PCIe 3 (tray)
			4 4-5, 6-7	670 mm	PCIe 6 (tray)
			5 0-1, 2-3	1100 mm	C0, C1 (Slot 5)
			6 4-5, 6-7	1100 mm	C0, C1 (Slot 6)

32i RAID adapter

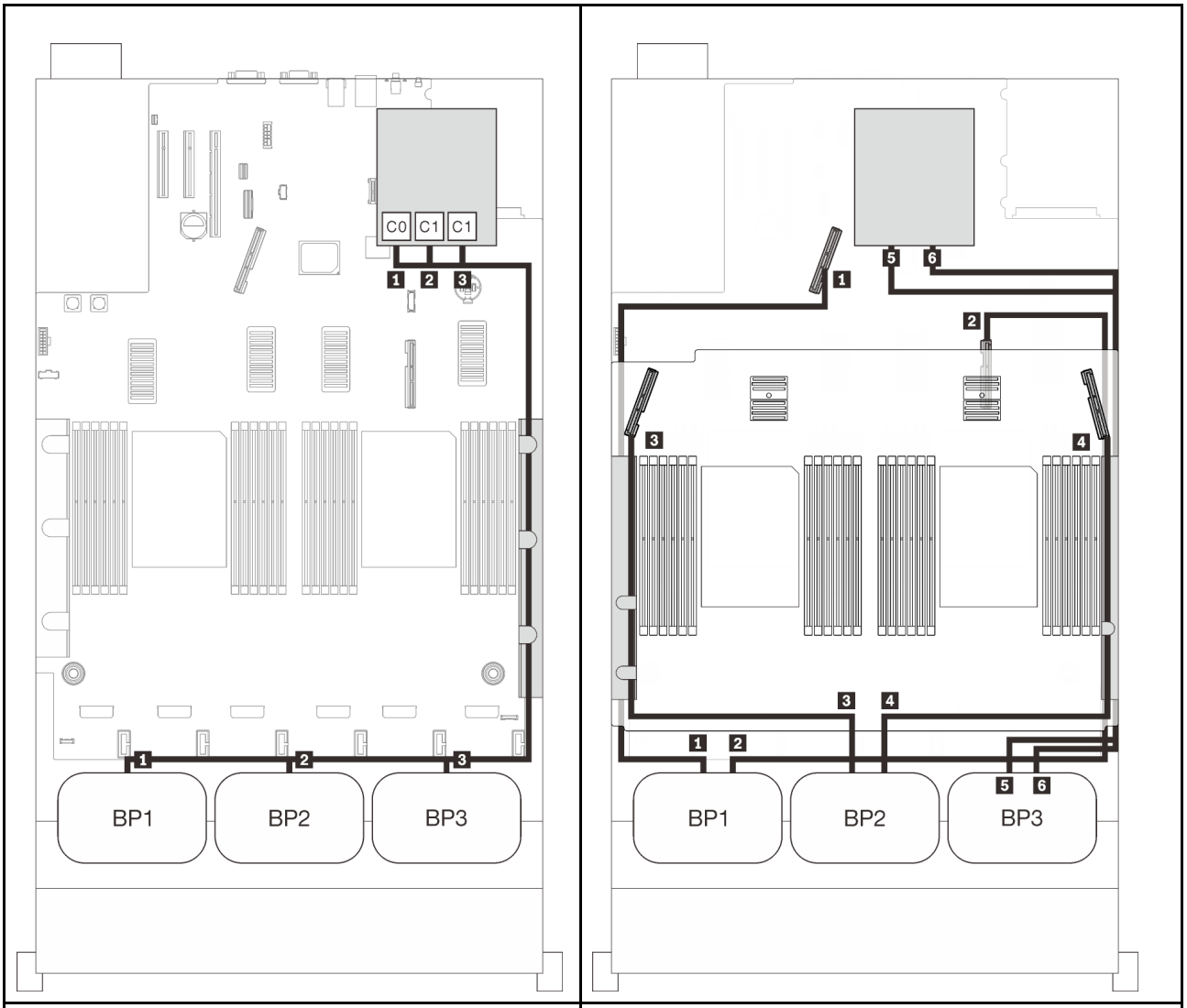

SAS/SATA cable routing			PCIe cable routing		
	Length	To	NVMe connector	Length	To
1	860 mm	C0 (32i)	1 0-1, 2-3	670 mm	PCIe 1 (on-board)
2	690 mm	C1 (32i)	2 4-5, 6-7	910 mm	PCIe 2 (on-board)
3	665 mm	C2 (32i)	3 0-1, 2-3	530 mm	PCIe 3 (tray)
			4 4-5, 6-7	670 mm	PCIe 6 (tray)
			5 0-1, 2-3	1100 mm	C0, C1 (Slot 5)
			6 4-5, 6-7	1100 mm	C0, C1 (Slot 6)

16i + 8i RAID adapter

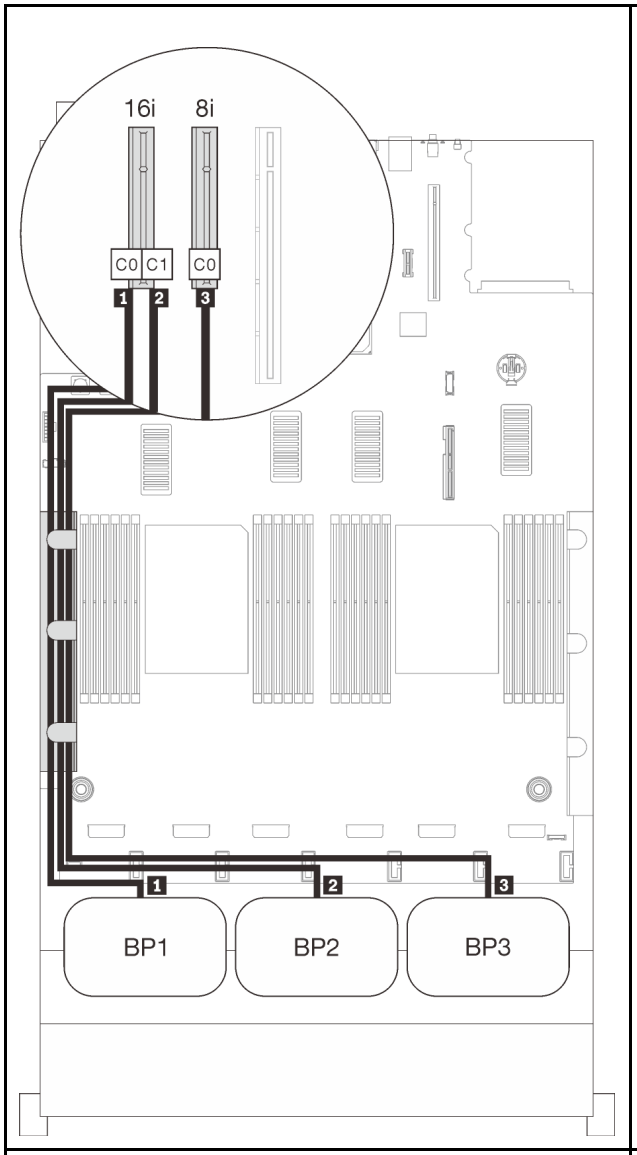

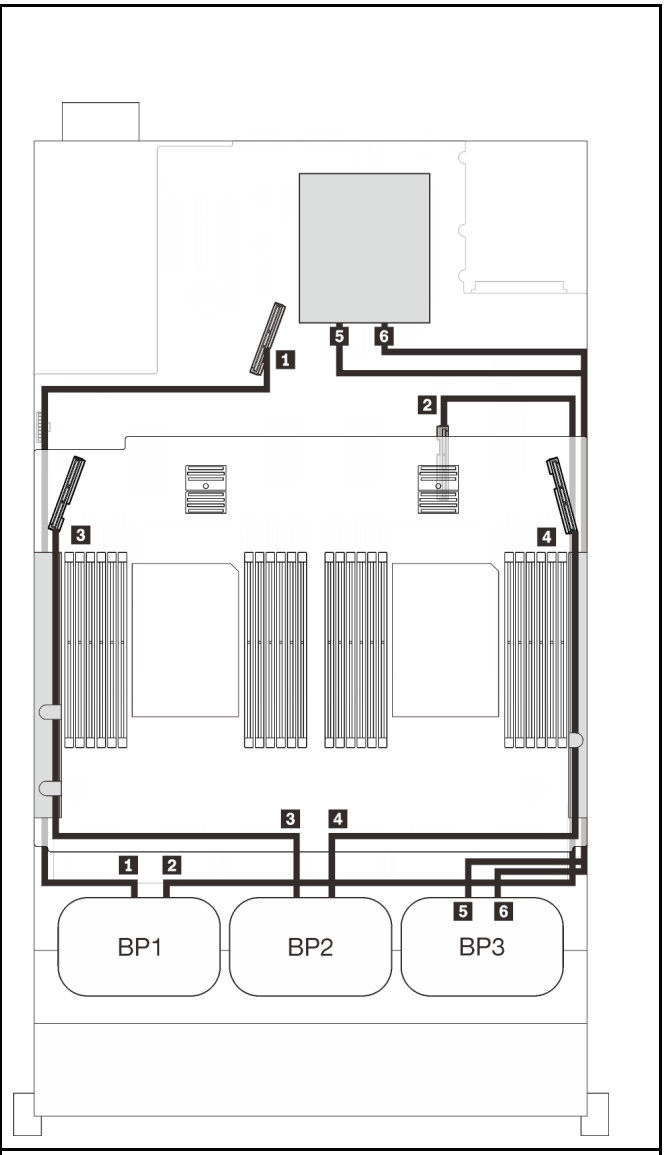

SAS/SATA cable routing			PCIe cable routing		
	Length	To	NVMe connector	Length	To
1	665 mm	C0 (16i)	1 0-1, 2-3	670 mm	PCIe 1 (on-board)
2	860 mm	C1 (16i)	2 4-5, 6-7	910 mm	PCIe 2 (on-board)
3	1000 mm	C0 (8i)	3 0-1, 2-3	530 mm	PCIe 3 (tray)
			4 4-5, 6-7	670 mm	PCIe 6 (tray)
			5 0-1, 2-3	1100 mm	C0, C1 (Slot 5)
			6 4-5, 6-7	1100 mm	C0, C1 (Slot 6)

Chapter 4. Server options

This section contains information about each of the optional components compatible to the server.

2.5-inch drive backplane kits

See this section to identify parts that are enclosed in the 2.5-inch backplane kits.

The server supports up to three drive backplanes with the following corresponding drive bay numbers.

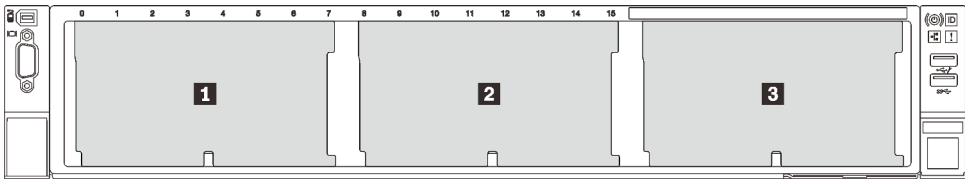

Figure 26. Drive backplane numbering

Table 15. Drive backplanes and corresponding drive bays

	Drive backplane	Drive bay	Supported drive backplane	Supported drive
1	1	0 to 7	• 2.5-inch SAS/SATA 8-bay drive backplane • 2.5-inch AnyBay/NVMe 8-bay drive backplane	• 2.5-inch SAS/SATA drives • 2.5-inch NVMe drives
2	2	8 to 15		
3	3	16 to 23		

Notes: When the following components are installed in the system, bay 16 to 23 are disabled, and the maximal supported drive quantity is 16.

- PMEMs
- 256 GB 3DS DRIMMs

© Copyright Lenovo 2020, 2025

2.5-inch SAS/SATA 8-bay drive backplane kit

See this section to identify parts that are enclosed in the 2.5-inch SAS/SATA 8-bay drive backplane kit.

This option kit comes with the following components.

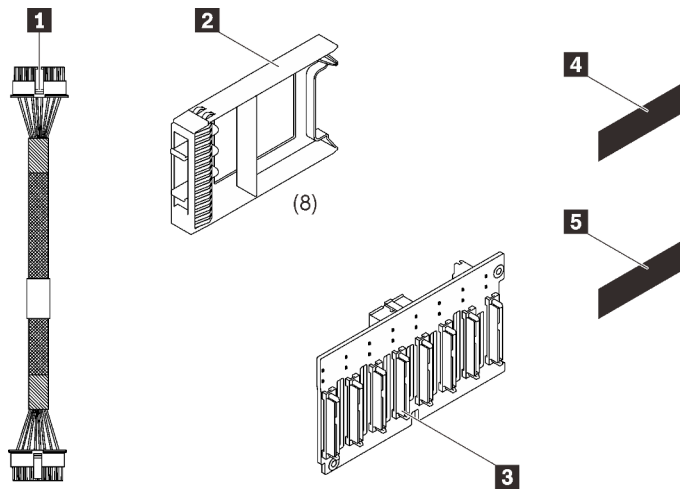

1 One power cable, 155 mm
2 Eight one-bay drive fillers
3 One 2.5-inch 8-bay SAS/SATA backplane
4 One SAS/SATA sequence label (8-15)
5 One SAS/SATA sequence label (16-23)

Figure 27. 2.5-inch 8-bay SAS/SATA backplane kit

See the following to identify connectors on the drive backplane.

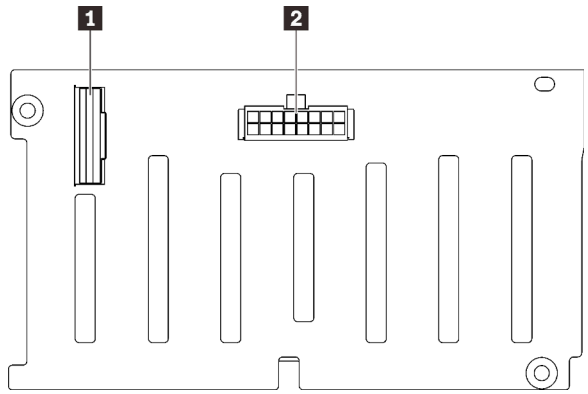

1 SAS/SATA signal connector
2 Backplane power/configuration connector

Figure 28. SAS/SATA drive backplane connectors

Follow the instructions in “Install server hardware options” in *Setup Guide* “Install a drive backplane” on page 140 to install the option kit.

2.5-inch AnyBay/NVMe 8-bay drive backplane kit

See this section to identify parts that are enclosed in the 2.5-inch AnyBay/NVMe 8-bay drive backplane kit.

This option kit comes with the following components.

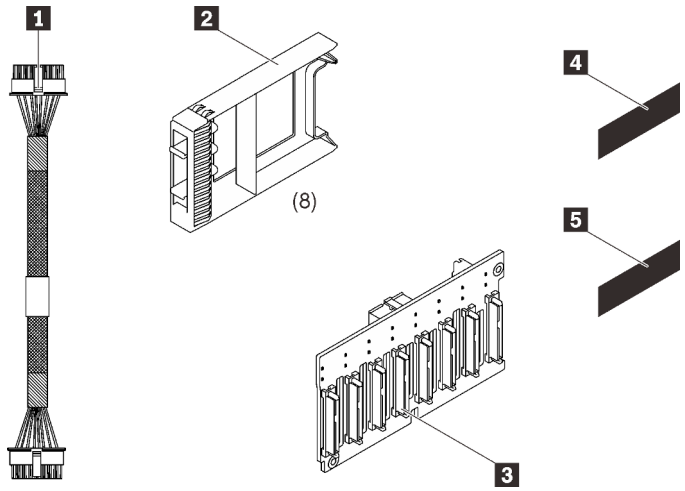

1 One power cable, 155 mm
2 Eight one-bay drive fillers
3 One 2.5-inch 8-bay AnyBay/NVMe backplane
4 One NVMe sequence label (8-15)
5 One NVMe sequence label (16-23)

Figure 29. 2.5-inch 8-bay SAS/SATA backplane kit

See the following to identify connectors on the drive backplane.

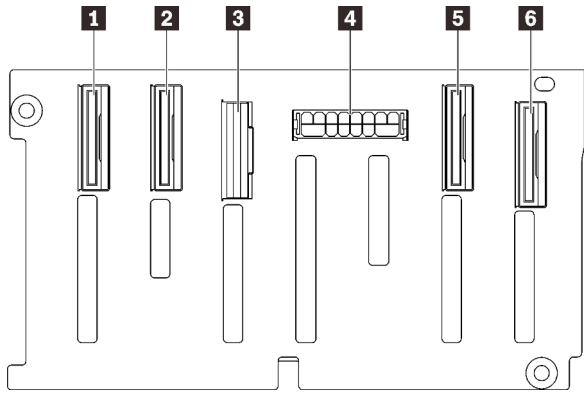

1 NVMe signal connector (6-7)
2 NVMe signal connector (4-5)
3 SAS/SATA signal connector
4 Backplane power/configuration connector
5 NVMe signal connector (2-3)
6 NVMe signal connector (0-1)

Figure 30. AnyBay/NVMe drive backplane connectors

Follow the instructions in “Install server hardware options” in *Setup Guide* “Install a drive backplane” on page 140 to install the option kit.

2.5-inch drive SAS/SATA cable kit

See this section to identify parts that are enclosed in the SAS/SATA cable kit.

This option kit comes with the following components.

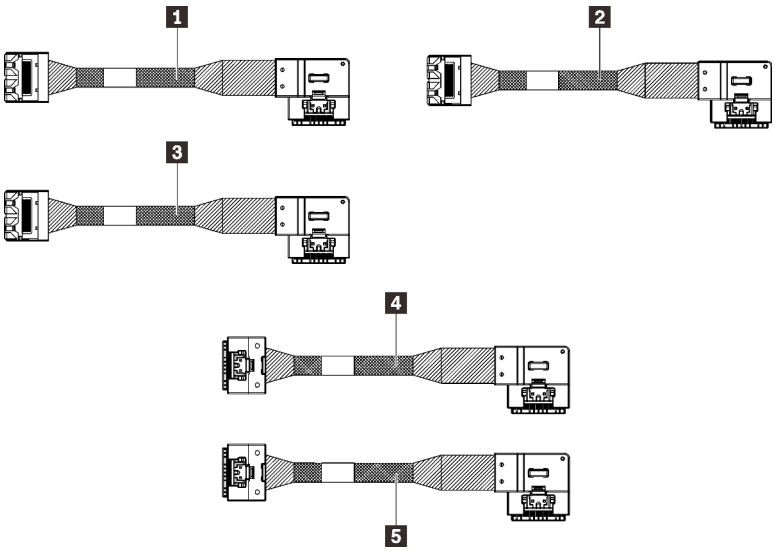

Figure 31. SAS/SATA cable kit

1 One MiniSAS/Slimline cable, 665 mm
2 One MiniSAS/Slimline cable, 860 mm
3 One MiniSAS/Slimline cable, 1000 mm
4 One Slimline cable, 860 mm
5 One Slimline cable, 1000 mm

Note: MiniSAS/Slimline cables are meant for Gen3 RAID adapters, while Slimline cables are meant for Gen4 RAID adapters.

Follow the instructions in “Cable routing for 2.5-inch drives” in *Setup Guide* “Cable routing for 2.5-inch drives” on page 43 to learn how to install the option kit.

Flash power module holder kit

See this section to identify parts that are enclosed in the flash power module holder kit.

This option kit comes with the following components.

Figure 32. Flash power module holder kit

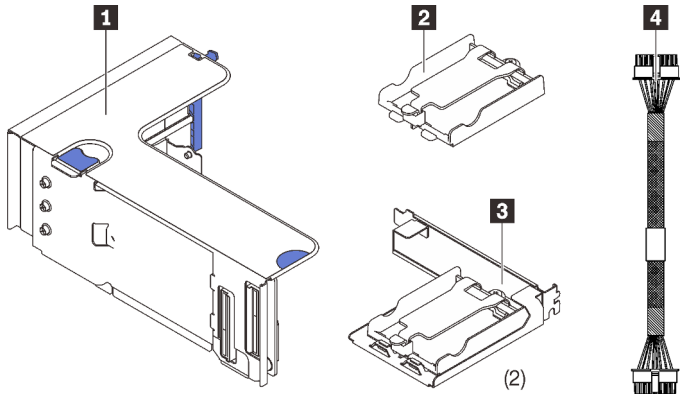

1 One riser bracket
2 One vertical holder
3 Two horizontal holder brackets
4 Two power cables

Follow the instructions in "Install a flash power module and holder" on page 147 to learn how to install the option kit.

Intrusion switch cable kit

See this section to identify parts that are enclosed in the Intrusion switch cable kit.

This option kit comes with the following components.

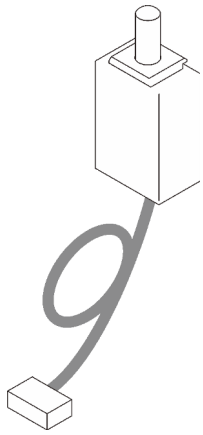

1 Intrusion switch cable

Figure 33. Intrusion switch cable kit

Follow the instructions in "Install the intrusion switch" on page 141 to learn how to install the option kit.

7mm drive cage kit

See this section to identify parts that are enclosed in the 7mm drive cage kit.

This option kit comes with the following components.

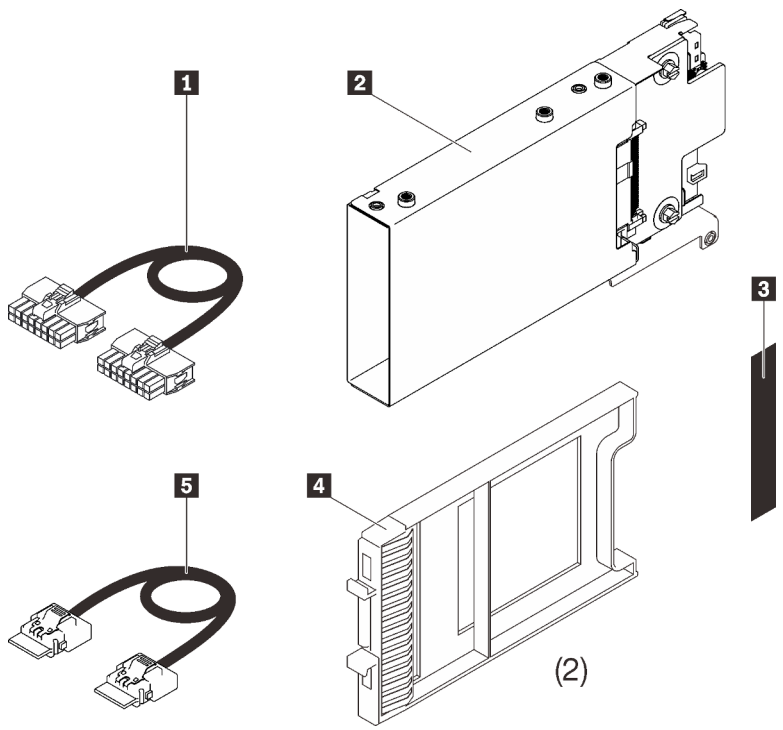

1 One power cable
2 One 7mm drive cage
3 One label (SATA/NVMe)
4 Two 7mm drive fillers
5 One signal cable

Figure 34. 7mm drive cage kit

Follow the instructions in "Install the 7mm drive cage" on page 165 to learn how to install the option kit.

PCIe riser cards

See this section to identify parts that are enclosed in the PCIe riser card kits.

Two zones are available for PCIe riser cards. See the following for corresponding risers:

- Zone 1 (PCIe slot 1 to 3) is available for:
  - "x16/x16 (x8 lanes) FH/HL PCIe riser kit" on page 111
  - "x16/x16/x16 PCIe riser kit" on page 113
- Zone 2 (PCIe slot 5 to 6) is available for "x16/x16 FH/HL PCIe riser kit" on page 113.

x16/x16 (x8 lanes) FH/HL PCIe riser kit

See this section to identify parts that are enclosed in the x16/x16 (x8 lanes) FH/HL PCIe riser kit.

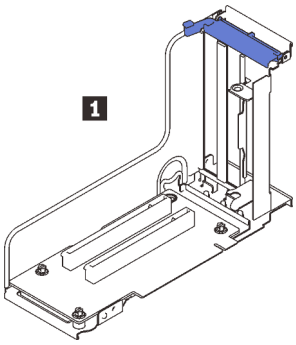

Figure 35. x16/x16 (x8 lanes) FH/HL PCIe riser kit

1	x16/x16 (x8 lanes) FH/HL PCIe riser card

See the following to identify connectors on the riser cards.

Note: This card is applied to both "x16/x16 (x8 lanes) FH/HL PCIe riser" on page 111 and "x16/x16 (x8 lanes) FH/HL PCIe riser with 7mm drive cage bracket" on page 112.

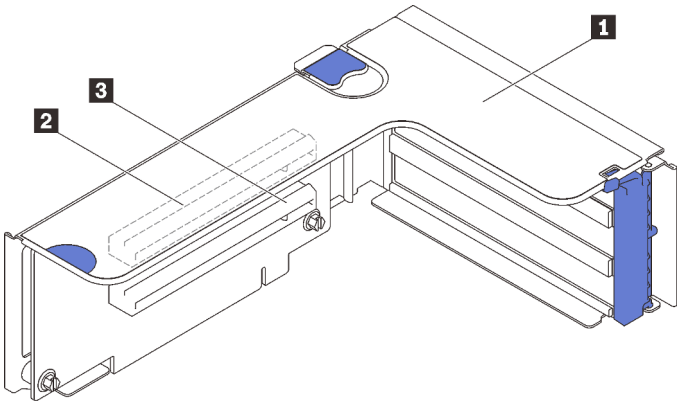

Figure 36. x16/x16 (x8 lanes) PCIe riser card connectors

Table 16. x16/x16 (x8 lanes) PCIe riser card connectors

1 PCIe full-height riser	3 PCI Express 3.0 x16 (x8 lane) (Slot 2)
2 PCI Express 3.0 x16 (x8 lane) (Slot 1)	

Follow the instructions in "Install the PCIe riser assembly" on page 152 to learn how to install the option kit.

x16/x16 (x8 lanes) FH/HL PCIe riser kit with 7mm drive cage bracket

See this section to identify parts that are enclosed in the x16/x16 (x8 lanes) FH/HL PCIe riser card.

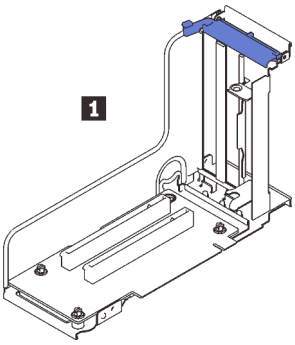

Figure 37. x16/x16 (x8 lanes) FH/HL PCIe riser card

1 x16/x16 (x8 lanes) FH/HL PCIe riser card	3 Slimline cable, 200 mm
2 Slimline cable, 200 mm	

See the following to identify connectors on the riser cards.

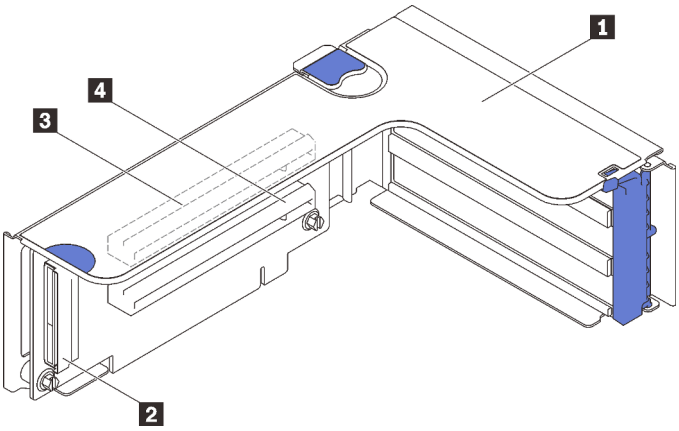

Figure 38. x16/x16 PCIe riser card connectors

1 PCIe full-height riser	3 PCI Express 3.0 x16 (Slot 5)
2 PCIe cable connector	4 PCI Express 3.0 x16 (Slot 6)

Follow the instructions in "Install the PCIe riser assembly" on page 152 to learn how to install the option kit.

x16/x16/x16 PCIe riser kit

See this section to identify parts that are enclosed in the x16/x16/x16 PCIe riser card.

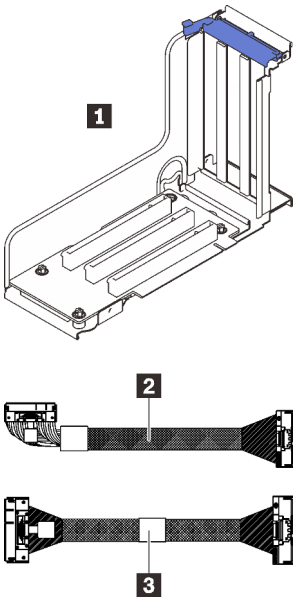

Figure 39. x16/x16/x16 PCIe riser card

1 One x16/x16/x16 FH/HL PCIe riser card	3 One Slimline cable, 200 ,,
2 One Slimline cable, 200 mm	

See the following to identify connectors on the riser cards.

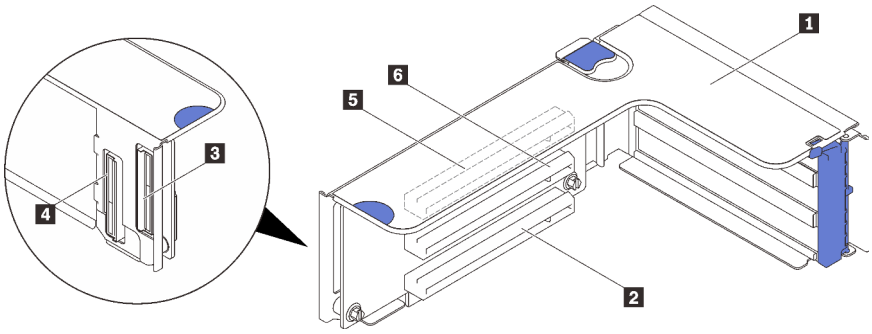

Figure 40. x16/x16/x16 PCIe riser card connectors

1 PCIe full-height riser	4 PCIe cable connector
2 PCI Express 3.0 x16 (Slot 3)	5 PCI Express 3.0 x16 (Slot 1)
3 PCIe cable connector	6 PCI Express 3.0 x16 (Slot 2)

Follow the instructions in "Install the PCIe riser assembly" on page 152 to learn how to install the option kit.

x16/x16 FH/HL PCIe riser kit

See this section to identify parts that are enclosed in the x16/x16 FH/HL PCIe riser kit.

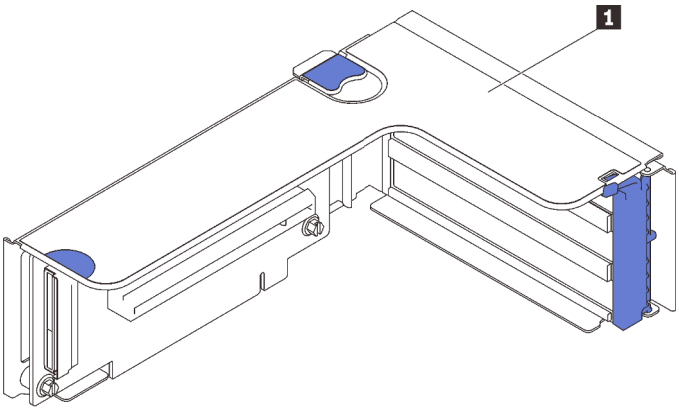

Figure 41. x16/x16 FH/HL PCIe riser kit

1	x16/x16 FH/HL PCIe riser card

See the following to identify connectors on the riser cards.

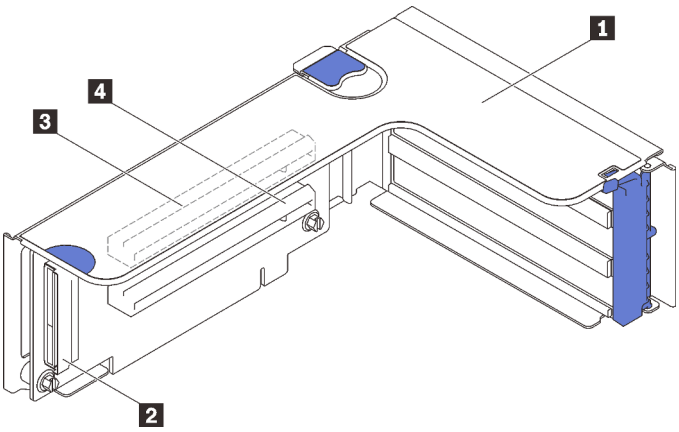

Figure 42. x16/x16 PCIe riser card connectors

1 PCIe full-height riser	3 PCI Express 3.0 x16 (Slot 5)
2 PCIe cable connector	4 PCI Express 3.0 x16 (Slot 6)

Follow the instructions in "Install the PCIe riser assembly" on page 152 to learn how to install the option kit.

Processor and memory expansion tray kit

See this section to identify parts that are enclosed in the processor and memory expansion tray kit.

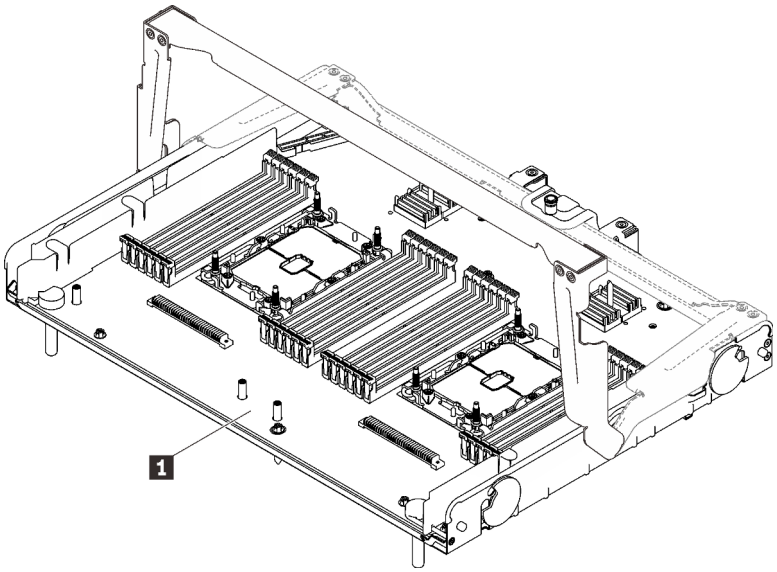

Figure 43. Processor and memory expansion tray

Table 17. Processor and memory expansion tray

1 Processor and memory expansion tray	

See the following to identity connectors on the processor and memory expansion tray.

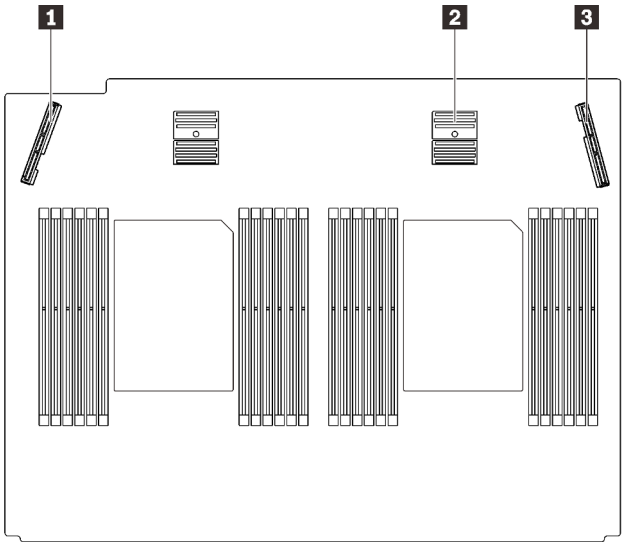

Figure 44. Processor and memory expansion tray connectors

Table 18. Processor and memory expansion tray connectors

1 PCIe signal connector 3	3 PCIe signal connector 6
2 PCIe signal connector 5	

Follow the instructions in "Install the processor and memory expansion tray" on page 166 to install the option kit.

Chapter 5. Server hardware setup

To set up the server, install any options that have been purchased, cable the server, configure and update the firmware, and install the operating system.

Server setup checklist

Use the server setup checklist to ensure that you have performed all tasks that are required to set up your server.

The server setup procedure varies depending on the configuration of the server when it was delivered. In some cases, the server is fully configured and you just need to connect the server to the network and an ac power source, and then you can power on the server. In other cases, the server needs to have hardware options installed, requires hardware and firmware configuration, and requires an operating system to be installed.

The following steps describe the general procedure for setting up a server:

1. Unpack the server package. See "Server package contents" on page 2.
2. Set up the server hardware.
   a. Install any required hardware or server options.
   b. If necessary, install the server into a standard rack cabinet by using the rail kit shipped with the server. See the *Rack Installation Instructions* that comes with optional rail kit.
   c. Connect the Ethernet cables and power cords to the server. See "Rear view" on page 25 to locate the connectors. See "Cable the server" on page 172 for cabling best practices.
   d. Power on the server. See "Power on the server" on page 172.

      Note: You can access the management processor interface to configure the system without powering on the server. Whenever the server is connected to power, the management processor interface is available. For details about accessing the management server processor, see:

      "Opening and Using the XClarity Controller Web Interface" section in the XCC documentation version compatible with your server at https://pubs.lenovo.com/lxcc-overview/.
   e. Validate that the server hardware was set up successfully. See "Validate server setup" on page 172.
3. Configure the system.
   a. Connect the Lenovo XClarity Controller to the management network. See "Set the network connection for the Lenovo XClarity Controller" on page 175.
   b. Update the firmware for the server, if necessary. See "Update the firmware" on page 177.
   c. Configure the firmware for the server. See "Configure the firmware" on page 180.

      The following information is available for RAID configuration:

      - https://lenovopress.com/lp0578-lenovo-raid-introduction
      - https://lenovopress.com/lp0579-lenovo-raid-management-tools-and-resources
   d. Install the operating system. See "Deploy the operating system" on page 182.
   e. Back up the server configuration. See "Back up the server configuration" on page 183.
   f. Install the applications and programs for which the server is intended to be used.

© Copyright Lenovo 2020, 2025

Installation Guidelines

Use the installation guidelines to install components in your server.

Before installing optional devices, read the following notices carefully:

Attention: Prevent exposure to static electricity, which might lead to system halt and loss of data, by keeping static-sensitive components in their static-protective packages until installation, and handling these devices with an electrostatic-discharge wrist strap or other grounding system.

- Read the safety information and guidelines to ensure your safety at work:
  - A complete list of safety information for all products is available at:

    https://pubs.lenovo.com/safety_documentation/
  - The following guidelines are available as well: "Handling static-sensitive devices" on page 120 and "Working inside the server with the power on" on page 120.
- Make sure the components you are installing are supported by your server. For a list of supported optional components for the server, see https://serverproven.lenovo.com/.
- When you install a new server, download and apply the latest firmware. This will help ensure that any known issues are addressed, and that your server is ready to work with optimal performance. Go to http://datacentersupport.lenovo.com/products/servers/thinksystem/sr850v2/downloads to download firmware updates for your server.

  Important: Some cluster solutions require specific code levels or coordinated code updates. If the component is part of a cluster solution, verify that the latest level of code is supported for the cluster solution before you update the code.
- It is good practice to make sure that the server is working correctly before you install an optional component.
- Keep the working area clean, and place removed components on a flat and smooth surface that does not shake or tilt.
- Do not attempt to lift an object that might be too heavy for you. If you have to lift a heavy object, read the following precautions carefully:
  - Make sure that you can stand steadily without slipping.
  - Distribute the weight of the object equally between your feet.
  - Use a slow lifting force. Never move suddenly or twist when you lift a heavy object.
  - To avoid straining the muscles in your back, lift by standing or by pushing up with your leg muscles.
- Make sure that you have an adequate number of properly grounded electrical outlets for the server, monitor, and other devices.
- Back up all important data before you make changes related to the disk drives.
- Have a small flat-blade screwdriver, a small Phillips screwdriver, and a T8 torx screwdriver available.
- To view the error LEDs on the system board and internal components, leave the power on.
- You do not have to turn off the server to remove or install hot-swap power supplies, hot-swap fans, or hot-plug USB devices. However, you must turn off the server before you perform any steps that involve removing or installing adapter cables, and you must disconnect the power source from the server before you perform any steps that involve removing or installing a riser card.
- Blue on a component indicates touch points, where you can grip to remove a component from or install it in the server, open or close a latch, and so on.
- Terra-cotta on a component or a terra-cotta label on or near a component indicates that the component can be hot-swapped if the server and operating system support hot-swap capability, which means that

you can remove or install the component while the server is still running. (Terra-cotta can also indicate touch points on hot-swap components.) See the instructions for removing or installing a specific hot-swap component for any additional procedures that you might have to perform before you remove or install the component.

- The Red strip on the drives, adjacent to the release latch, indicates that the drive can be hot-swapped if the server and operating system support hot-swap capability. This means that you can remove or install the drive while the server is still running.

  Note: See the system specific instructions for removing or installing a hot-swap drive for any additional procedures that you might need to perform before you remove or install the drive.

- After finishing working on the server, make sure you reinstall all safety shields, guards, labels, and ground wires.

Safety inspection checklist

Use the information in this section to identify potentially unsafe conditions with your server. As each machine was designed and built, required safety items were installed to protect users and service technicians from injury.

Notes:

1. The product is not suitable for use at visual display workplaces according to §2 of the Workplace Regulations.
2. The set-up of the server is made in the server room only.

CAUTION:
This equipment must be installed or serviced by trained personnel, as defined by the NEC, IEC 62368-1 & IEC 60950-1, the standard for Safety of Electronic Equipment within the Field of Audio/Video, Information Technology and Communication Technology. Lenovo assumes you are qualified in the servicing of equipment and trained in recognizing hazards energy levels in products. Access to the equipment is by the use of a tool, lock and key, or other means of security, and is controlled by the authority responsible for the location.

Important: Electrical grounding of the server is required for operator safety and correct system function. Proper grounding of the electrical outlet can be verified by a certified electrician.

Use the following checklist to verify that there are no potentially unsafe conditions:

1. Make sure that the power is off and the power cord is disconnected.
2. Check the power cord.
   - Make sure that the third-wire ground connector is in good condition. Use a meter to measure third-wire ground continuity for 0.1 ohm or less between the external ground pin and the frame ground.
   - Make sure that the power cord is the correct type.

     To view the power cords that are available for the server:

     a. Go to:

     http://dcsc.lenovo.com/#/

     b. Click **Preconfigured Model** or **Configure to order**.
     c. Enter the machine type and model for your server to display the configurator page.
     d. Click **Power → Power Cables** to see all line cords.
   - Make sure that the insulation is not frayed or worn.
3. Check for any obvious non-Lenovo alterations. Use good judgment as to the safety of any non-Lenovo alterations.

4. Check inside the server for any obvious unsafe conditions, such as metal filings, contamination, water or other liquid, or signs of fire or smoke damage.
5. Check for worn, frayed, or pinched cables.
6. Make sure that the power-supply cover fasteners (screws or rivets) have not been removed or tampered with.

System reliability guidelines

Review the system reliability guidelines to ensure proper system cooling and reliability.

Make sure the following requirements are met:

- When the server comes with redundant power, a power supply must be installed in each power-supply bay.
- Adequate space around the server must be spared to allow server cooling system to work properly. Leave approximately 50 mm (2.0 in.) of open space around the front and rear of the server. Do not place any object in front of the fans.
- For proper cooling and airflow, refit the server cover before you turn the power on. Do not operate the server for more than 30 minutes with the server cover removed, for it might damage server components.
- Cabling instructions that come with optional components must be followed.
- A failed fan must be replaced within 48 hours after malfunction.
- A removed hot-swap fan must be replaced within 30 seconds after removal.
- A removed hot-swap drive must be replaced within two minutes after removal.
- A removed hot-swap power supply must be replaced within two minutes after removal.
- Every air baffle that comes with the server must be installed when the server starts (some servers might come with more than one air baffle). Operating the server with a missing air baffle might damage the processor.
- All processor sockets must contain either a socket cover or a processor with heat sink.
- When more than one processor is installed, fan population rules for each server must be strictly followed.

Working inside the server with the power on

Guidelines to work inside the server with the power on.

Attention: The server might stop and data loss might occur when internal server components are exposed to static electricity. To avoid this potential problem, always use an electrostatic-discharge wrist strap or other grounding systems when working inside the server with the power on.

- Avoid loose-fitting clothing, particularly around your forearms. Button or roll up long sleeves before working inside the server.
- Prevent your necktie, scarf, badge rope, or hair from dangling into the server.
- Remove jewelry, such as bracelets, necklaces, rings, cuff links, and wrist watches.
- Remove items from your shirt pocket, such as pens and pencils, in case they fall into the server as you lean over it.
- Avoid dropping any metallic objects, such as paper clips, hairpins, and screws, into the server.

Handling static-sensitive devices

See this section to handle static-sensitive devices.

Attention: Prevent exposure to static electricity, which might lead to system halt and loss of data, by keeping static-sensitive components in their static-protective packages until installation, and handling these devices with an electrostatic-discharge wrist strap or other grounding system.

- Limit your movement to prevent building up static electricity around you.
- Take additional care when handling devices during cold weather, for heating would reduce indoor humidity and increase static electricity.
- Always use an electrostatic-discharge wrist strap or other grounding system, particularly when working inside the server with the power on.
- While the device is still in its static-protective package, touch it to an unpainted metal surface on the outside of the server for at least two seconds. This drains static electricity from the package and from your body.
- Remove the device from the package and install it directly into the server without putting it down. If it is necessary to put the device down, put it back into the static-protective package. Never place the device on the server or on any metal surface.
- When handling a device, carefully hold it by the edges or the frame.
- Do not touch solder joints, pins, or exposed circuitry.
- Keep the device from others' reach to prevent possible damages.

Memory module installation order

Memory modules must be installed in a specific order based on the memory configuration that you implement on your server.

The following memory configurations are available:

- "DRAM DIMMs installation order" on page 121
  - "Independent memory mode installation order" on page 121
  - "Memory mirroring mode installation order" on page 124
- "PMEM and DRAM DIMM installation order" on page 126
  - "App Direct Mode" on page 131

For information about memory modes, see "Memory configuration" on page 181

DRAM DIMMs installation order

This section contains information of how to install DRAM DIMMs properly.

Independent memory mode installation order

In independent memory mode, memory channels can be populated with DIMMs in any order and you can populate all channels for each processor in any order with no matching requirements. Independent memory mode provides the highest level of memory performance, but lacks failover protection. The DIMM installation order for independent memory mode varies based on the number of processors and memory modules installed in the server.

Independent memory mode guidelines:

- Individual memory channels can run at different DIMM timings, but all channels must run at the same interface frequency.
- Populate memory channel 0 first.
- Memory channel 1 is empty or identically populated as memory channel 0.
- Memory channel 2 is empty or identically populated as memory channel 1.
- In each memory channel, populate slot 0 first.

- If a memory channel has two DIMMs, populate the DIMM with a higher number of ranks in slot 0.

With two processors

The following table shows the DIMM population sequence for independent memory mode when two processors are installed.

Table 19. Independent mode with two processors

Total	Processor 1												Processor 2												Total
DIMMs	**1**	**2**	**3**	**4**	**5**	**6**	**7**	**8**	**9**	**10**	**11**	**12**	**13**	**14**	**15**	**16**	**17**	**18**	**19**	**20**	**21**	**22**	**23**	**24**	**DIMMs**
2								8												20					**2**
8*			3		5			8		10					15		17			20		22			**8***
12*	1		3		5			8		10		12	13		15		17			20		22		24	**12***
16*			3	4	5	6	7	8	9	10					15	16	17	18	19	20	21	22			**16***
24*	1	2	3	4	5	6	7	8	9	10	11	12	13	14	15	16	17	18	19	20	21	22	23	24	**24***

Note: DIMM configurations with an asterisk (*) listed in the table support the Sub NUMA Clustering (SNC) feature, which can be enabled via UEFI. SNC is not supported if DIMM population does not follow the sequence indicated by the table above.

With four processors

The following tables show the DIMM population sequence for independent memory mode when four processors are installed.

Table 20. Independent mode with four processors

Total	Processor 1												Processor 2												Total
DIMMs	**1**	**2**	**3**	**4**	**5**	**6**	**7**	**8**	**9**	**10**	**11**	**12**	**13**	**14**	**15**	**16**	**17**	**18**	**19**	**20**	**21**	**22**	**23**	**24**	**DIMMs**
4								8												20					**4**
16*			3		5			8		10					15		17			20		22			**16***
24*	1		3		5			8		10		12	13		15		17			20		22		24	**24***
32*			3	4	5	6	7	8	9	10					15	16	17	18	19	20	21	22			**32***
48*	1	2	3	4	5	6	7	8	9	10	11	12	13	14	15	16	17	18	19	20	21	22	23	24	**48***
Total	**Processor 3**												**Processor 4**												**Total**
DIMMs	**25**	**26**	**27**	**28**	**29**	**30**	**31**	**32**	**33**	**34**	**35**	**36**	**37**	**38**	**39**	**40**	**41**	**42**	**43**	**44**	**45**	**46**	**47**	**48**	**DIMMs**
4								32												44					**4**
16*			27		29			32		34					39		41			44		46			**16***
24*	25		27		29			32		34		36	37		39		41			44		46		48	**24***
32*			27	28	29	30	31	32	33	34					39	40	41	42	43	44	45	46			**32***
48*	25	26	27	28	29	30	31	32	33	34	35	36	37	38	39	40	41	42	43	44	45	46	47	48	**48***

Note: DIMM configurations with an asterisk (*) listed in the table support the Sub NUMA Clustering (SNC) feature, which can be enabled via UEFI. SNC is not supported if DIMM population does not follow the sequence indicated by the table above.

Memory mirroring mode installation order

Memory-mirroring mode provides full memory redundancy while reducing the total system memory capacity in half. Memory channels are grouped in pairs with each channel receiving the same data. If a failure occurs, the memory controller switches from the DIMMs on the primary channel to the DIMMs on the backup channel. The DIMM installation order for memory mirroring varies based on the number of processors and DIMMs installed in the server.

Memory mirroring guidelines:

- Memory mirroring reduces the maximum available memory by half of the installed memory. For example, if the server has 64 GB of installed memory, only 32 GB of addressable memory is available when memory mirroring is enabled.
- Each DIMM must be identical in size and architecture.
- DIMMs on each memory channel must be of equal density.
- If two memory channels have DIMMs, mirroring occurs across two DIMMs (channels 0/1 will both contain the primary/secondary memory caches).
- If three memory channels have DIMMs, mirroring occurs across all three DIMMs (channels 0/1, channels 1/2, and channels 2/0 will all contain primary/secondary memory caches).

With two processors

The following table shows the DIMM population sequence for memory mirroring when two processors are installed.

Table 21. Memory Mirroring with two processors

Total	Processor 1												Processor 2												Total
DIMMs	1	2	3	4	5	6	7	8	9	10	11	12	13	14	15	16	17	18	19	20	21	22	23	24	DIMMs
8*			3		5			8		10					15		17			20		22			8
12*	1		3		5			8		10		12	13		15		17			20		22		24	12
24*	1	2	3	4	5	6	7	8	9	10	11	12	13	14	15	16	17	18	19	20	21	22	23	24	24

Note: DIMM configurations with an asterisk (*) listed in the table support the Sub NUMA Clustering (SNC) feature, which can be enabled via UEFI. SNC is not supported if DIMM population does not follow the sequence indicated by the table above.

With four processors

The following table shows the DIMM population sequence for memory mirroring mode when four processors are installed.

Table 22. Memory mirroring with four processors

Total	Processor 1												Processor 2												Total
DIMMs	1	2	3	4	5	6	7	8	9	10	11	12	13	14	15	16	17	18	19	20	21	22	23	24	DIMMs
16*			3		5			8		10					15		17			20		22			16
24*	1		3		5			8		10		12	13		15		17			20		22		24	24
48*	1	2	3	4	5	6	7	8	9	10	11	12	13	14	15	16	17	18	19	20	21	22	23	24	48
Total	Processor 3												Processor 4												Total
DIMMs	25	26	27	28	29	30	31	32	33	34	35	36	37	38	39	40	41	42	43	44	45	46	47	48	DIMMs
16*			27		29			32		34					39		41			44		46			16

Table 22. Memory mirroring with four processors (continued)

Total	Processor 3												Processor 4												Total
DIMMs	**25**	**26**	**27**	**28**	**29**	**30**	**31**	**32**	**33**	**34**	**35**	**36**	**37**	**38**	**39**	**40**	**41**	**42**	**43**	**44**	**45**	**46**	**47**	**48**	**DIMMs**
24*	25		27		29			32		34		46	37		39		41			44		46		48	**24**
48*	25	26	27	28	29	30	31	32	33	34	35	36	37	38	39	10	41	42	43	44	45	46	47	48	**48**

Note: DIMM configurations with an asterisk (*) listed in the table support the Sub NUMA Clustering (SNC) feature, which can be enabled via UEFI. SNC is not supported if DIMM population does not follow the sequence indicated by the table above.

PMEM and DRAM DIMM installation order

This section contains information of how to install PMEMs and DRAM DIMMs properly.

When PMEMs and DRAM DIMMs are mixed in the system, the following modes are supported:

- "App Direct Mode" on page 131

Note: Only App Direct Mode is supported. Memory Mode and Mixed Mode are not supported.

See the following topics to learn how to set up and configure PMEMs.

- "PMEM rules" on page 126
- "Setting up the system for PMEM for the first time" on page 126
- "PMEM Management options" on page 126
- "Adding or replacing PMEMs in App Direct Mode" on page 129

PMEM rules

Make sure to meet the following requirements when applying PMEMs in the system.

- All the PMEMs that are installed must be of the same part number.
- All the DRAM DIMMs that are installed must be of the same type, rank, and capacity with minimum capacity of 16 GB. It is recommended to use Lenovo DRAM DIMMs with the same part number.
- Supported types of DRAM DIMMs and capacity vary with processors:
  - Processors with model name ending in **H**:
    - DRAM: 32/64 GB RDIMMs
    - PMEM: 128 GB
  - Processors with model name ending in **HL**:
    - DRAM: 128 GB 3DS RDIMMs
    - PMEM: 128, 256 or 512 GB

Setting up the system for PMEM for the first time

Complete the following steps when installing PMEMs to the system for the first time.

1. Consider "PMEM rules" on page 126 and acquire the PMEMs and DRAM DIMMs that meet the requirements.
2. Remove all the memory modules that are presently installed (see "Remove a memory module" in *Maintenance Manual*).
3. Follow the adopted combination to install all the PMEMs and DRAM DIMMs (see "Install a memory module" on page 162).
4. Disable security on all the installed PMEMs (see "PMEM Management options" on page 126).
5. Make sure the PMEM firmware is the latest version. If not, update it to the latest version (see https://sysmgt.lenovofiles.com/help/topic/com.lenovo.lxca.doc/update_fw.html).
6. Configure the PMEMs so that the capacity is available for use (see "PMEM Management options" on page 126).

PMEM Management options

PMEMs can be managed with the following tools:

- **Lenovo XClarity Provisioning Manager (LXPM)**

To open LXPM, power on the system and press **F1** as soon as the logo screen appears. If a password has been set, enter the password to unlock LXPM.

Go to **UEFI Setup → System Settings → Intel Optane PMEMs** to configure and manage PMEMs.

For more details, see the "UEFI setup" section in the LXPM documentation compatible with your server at Lenovo XClarity Provisioning Manager portal page.

Note: If the text-based interface of Setup Utility opens instead of LXPM, go to **System Settings → <F1> Start Control** and select **Tool Suite**. Then, reboot the system and press **F1** as soon as the logo screen appears to open LXPM.

- **Setup Utility**

  To enter Setup Utility:

  1. Power on the system and press **F1** to open LXPM.
  2. Go to **UEFI Settings → System Settings**, click on the pull-down menu on the upper right corner of the screen, and select **Text Setup**.
  3. Reboot the system, and press **F1** as soon as the logo screen appears.

  Go to **System Configuration and Boot Management → System Settings → Intel Optane PMEMs** to configure and manage PMEMs.

- **Lenovo XClarity Essentials OneCLI**

  Some management options are available in commands that are executed in the path of Lenovo XClarity Essentials OneCLI in the operating system. See https://pubs.lenovo.com/lxce-onecli/download_use_onecli to learn how to download and use Lenovo XClarity Essentials OneCLI.

Following are the available management options:

- **Intel Optane PMEMs details**

  Select this option to view the following details concerning each of the installed PMEMs:

  – Number of Intel Optane PMEMs detected
  – Total raw capacity
  – Total memory capacity
  – Total App Direct capacity
  – Total unconfigured capacity
  – Total inaccessible capacity
  – Total reserved capacity

  Alternatively, view PMEM details with the following command in OneCLI:

  ```
  OneCli.exe config show IntelOptanePMEM --bmc XCC_Account:XCC_Password@XCC_IP
  ```

  Notes:
  – *USERID* stands for XCC user ID.
  – *PASSW0RD* stands for XCC user password.
  – *10.104.195.86* stands for IP address.

- **Regions**

  After the memory percentage is set and the system is rebooted, regions for the App Direct capacity will be generated automatically. Select this option to view the App Direct regions per processor.

- **Namespaces**

  App Direct capacity of PMEMs requires the following steps before it is truly available for applications.

1. Namespaces must be created for region capacity allocation.
2. Filesystem must be created and formatted for the namespaces in the operating system.

Each App Direct region can be allocated into one namespace. Create namespaces in the following operating systems:

- Windows: Use *powershell* command. To create a namespace, use Windows Server 2019 or later versions.
- Linux: Use *ndctl* command.
- VMware: Reboot the system, and VMware will create namespaces automatically.

After creating namespaces for App Direct capacity allocation, make sure to create and format filesystem in the operating system so that the App Direct capacity is accessible for applications.

- **Security**
  - Enable Security

    Attention: By default, PMEM security is disabled. Before enabling security, make sure all the country or local legal requirements regarding data encryption and trade compliance are met. Violation could cause legal issues.

    PMEMs can be secured with passphrases. Two types of passphrase protection scope are available for PMEM:

    - **Platform:** Choose this option to run security operation on all the installed PMEM units at once. A platform passphrase is stored and automatically applied to unlock PMEMs before operating system starts running, but the passphrase still has to be disabled manually for secure erase.

      Alternatively, enable/disable platform level security with the following commands in OneCLI:

      - Enable security:
        1. Enable security.
           ```
           onecli.exe config set IntelOptanePMEM.SecurityOperation "Enable Security" --imm
           USERID:PASSWORD@10.104.195.86
           ```
        2. Set the security passphrase.
           ```
           onecli.exe config set IntelOptanePMEM.SecurityPassphrase "123456" --imm
           USERID:PASSWORD@10.104.195.86 --imm USERID:PASSWORD@10.104.195.86
           ```

           Where *123456* stands for the passphrase.
        3. Reboot the system.
      - Disable security:
        1. Disable security.
           ```
           onecli.exe config set IntelOptanePMEM.SecurityOperation "Disable Security" --imm
           USERID:PASSWORD@10.104.195.86
           ```
        2. Enter passphrase.
           ```
           onecli.exe config set IntelOptanePMEM.SecurityPassphrase "123456" --imm
           USERID:PASSWORD@10.104.195.86
           ```
        3. Reboot the system.
    - **Single PMEM:** Choose this option to run security operation on one or more selected PMEM units.

      Notes:

      - Single PMEM passphrases are not stored in the system, and security of the locked units needs to be disabled before the units are available for access or secure erase.

- Always make sure to keep records of the slot number of locked PMEMs and corresponding passphrases. In the case the passphrases are lost or forgotten, the stored data cannot be backed up or restored, but you can contact Lenovo service for administrative secure erase.
- After three failed unlocking attempts, the corresponding PMEMs enter “exceeded” state with a system warning message, and the PMEM unit can only be unlocked after the system is rebooted.

To enable passphrase, go to **Security → Press to Enable Security**.

– Secure Erase

Notes:

– Password is required to perform Secure Erase when security enabled.

– Before executing secure erase, make sure ARS (Address Range Scrub) is done on all PMEMs or on the specific PMEMs selected. Otherwise, secure erase cannot be started on all PMEMs or the specific PMEM selected, and the following text message will pop out:

```
The passphrase is incorrect for single or multiple or all
Intel Optane PMEMs selected, or maybe there is namespace
on the selected PMEMs. Secure erase operation is not done
on all Intel Optane PMEMs selected.
```

Secure erase cleanses all the data that is stored in the PMEM unit, including encrypted data. This data deletion method is recommended before returning or disposing a malfunctioning unit, or changing PMEM mode. To perform secure erase, go to **Security → Press to Secure Erase**.

Alternatively, perform platform level secure erase with the following command in OneCLI:

```
OneCli.exe config set IntelOptanePMEM.SecurityOperation "Secure Erase Without Passphrase" --bmc
USERID:PASSWORD@10.104.195.86
```

- **PMEM Configuration**

PMEM contains spared internal cells to stand in for the failed ones. When the spared cells are exhausted to 0%, there will be an error message, and it is advised to back up data, collect service log, and contact Lenovo support.

There will also be a warning message when the percentage reaches 1% and a selectable percentage (10% by default). When this message appears, it is advised to back up data and run PMEM diagnostics (see the “Diagnostics” section in the LXPM documentation compatible with your server at https://pubs.lenovo.com/lxpm-overview/). To adjust the selectable percentage that the warning message requires, go to **Intel Optane PMEMs → PMEM Configuration**, and input the percentage.

Alternatively, change the selectable percentage with the following command in OneCLI:

```
onecli.exe config set IntelOptanePMEM.PercentageRemainingThresholds 20 --imm USERID:PASSWORD@10.104.195.86
```

Where *20* is the selectable percentage.

Adding or replacing PMEMs in App Direct Mode

Complete the following steps before adding or replacing PMEMs in App Direct Mode.

1. Back up stored data in PMEM namespaces.
2. Disable PMEM security with one of the following options:
   - **LXPM**

     Go to **UEFI Setup → System Settings → Intel Optane PMEMs → Security → Press to Disable Security**, and input passphrase to disable security.

- **Setup Utility**

  Go to **System Configuration and Boot Management → System Settings → Intel Optane PMEMs → Security → Press to Disable Security**, and input passphrase to disable security.

3. Delete namespaces with command corresponding to the operating system that is installed:
   - **Linux** command:
     ```
     ndctl destroy-namespace all -f
     ndctl destroy-namespace all -f
     ```
   - **Windows** Powershell command
     ```
     Get-PmemDisk | Remove-PmemDisk
     ```
4. Clear Platform Configuration Data (PCD) and Namespace Label Storage Area (LSA) with the following ipmctl command (for both Linux and Windows).
   ```
   ipmctl delete -pcd
   ```

   Notes: See the following links to learn how to download and use impctl in different operating systems:
   - Windows: https://datacentersupport.lenovo.com/us/en/videos/YTV101407
   - Linux: https://datacentersupport.lenovo.com/us/en/solutions/HT508642
5. Reboot the system.

App Direct Mode

In this mode, PMEMs act as independent and persistent memory resources directly accessible by specific applications, and DRAM DIMMs act as system memory.

With two processors

Table 23. Memory population in App Direct Mode with two processors

Configuration	Processor 1												Processor 2											
	1	2	3	4	5	6	7	8	9	10	11	12	13	14	15	16	17	18	19	20	21	22	23	24
12 PMEMs and 12 DIMMs	D	**P**	D	**P**	D	**P**	**P**	D	**P**	D	**P**	D	D	**P**	D	**P**	D	**P**	**P**	D	**P**	D	**P**	D

- **D**: 32 GB RDIMM, 64 GB RDIMM, or 128 GB 3DS RDIMM
- **P**: 128 GB, 256 GB, or 512 GB Persistent Memory Module (PMEM)

With four processors

Table 24. Memory population in App Direct Mode with four processors

Configuration	Processor 1												Processor 2											
	1	2	3	4	5	6	7	8	9	10	11	12	13	14	15	16	17	18	19	20	21	22	23	24
24 PMEMs and 24 DIMMs	D	**P**	D	**P**	D	**P**	**P**	D	**P**	D	**P**	D	D	**P**	D	**P**	D	**P**	**P**	D	**P**	D	**P**	D
	Processor 3												Processor 4											
	25	26	27	28	29	30	31	32	33	34	35	36	37	38	39	40	41	42	43	44	45	46	47	48
	D	**P**	D	**P**	D	**P**	**P**	D	**P**	D	**P**	D	D	**P**	D	**P**	D	**P**	**P**	D	**P**	D	**P**	D

- **D**: 32 GB RDIMM, 64 GB RDIMM, or 128 GB 3DS RDIMM
- **P**: 128 GB, 256 GB, or 512 GB Persistent Memory Module (PMEM)

Install hot-swap server hardware options

Follow the instructions in this section to install hot-swap server hardware options.

Install a 7mm drive

Follow the instructions in this section to install a 7mm drive.

About this task

Procedure

Step 1. If a drive filler has been installed in the drive bay, remove it.

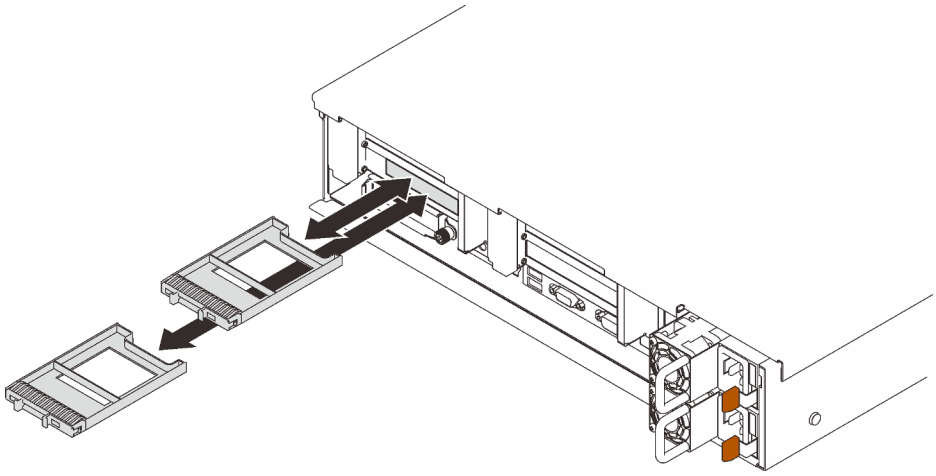

Figure 45. Removing 7mm drive fillers

Step 2. Gently rotate the release latch away to unlock the drive handle.

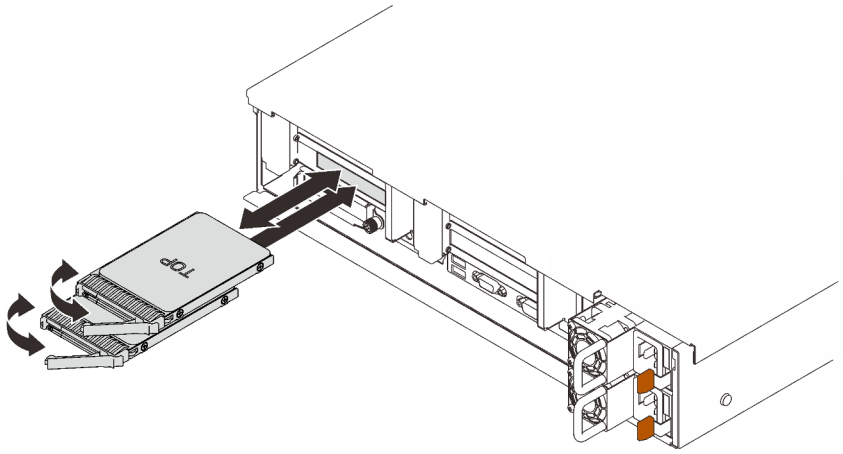

Figure 46. Installing 7mm drives

Step 3. Slide the drive into the drive bay, and push it until it stops.

Step 4. Rotate the handle back to the locked position.

Demo video

Watch the procedure on YouTube

Install a 2.5-inch hot-swap drive

Follow instructions in this section to install a 2.5-inch hot-swap drive.

About this task

Notes: The server supports up to three drive backplanes with the following corresponding drive bay numbers.

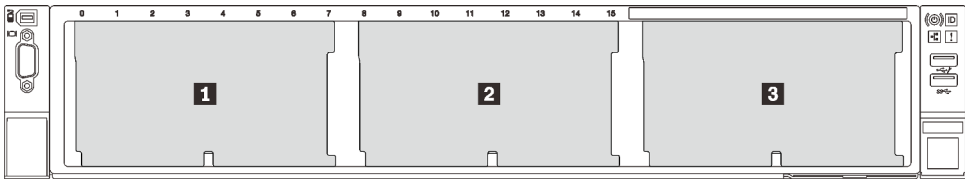

Figure 47. Drive backplane numbering

Table 25. Drive backplanes and corresponding drive bays

	Drive backplane	Drive bay	Supported drive backplane	Supported drive
1	1	0 to 7	• 2.5-inch SAS/SATA 8-bay drive backplane • 2.5-inch AnyBay/NVMe 8-bay drive backplane	• 2.5-inch SAS/SATA drives • 2.5-inch NVMe drives
2	2	8 to 15		
3	3	16 to 23		

Notes: When the following components are installed in the system, bay 16 to 23 are disabled, and the maximal supported drive quantity is 16.

- PMEMs
- 256 GB 3DS DRIMMs

For a complete list of supported optional device for this server, see https://serverproven.lenovo.com/.

Procedure

Step 1. If a drive filler has been installed in the drive bay, remove it.

Step 2. Gently rotate the release latch away to unlock the drive handle.

Step 3. Slide the drive into the drive bay, and push it until it stops.

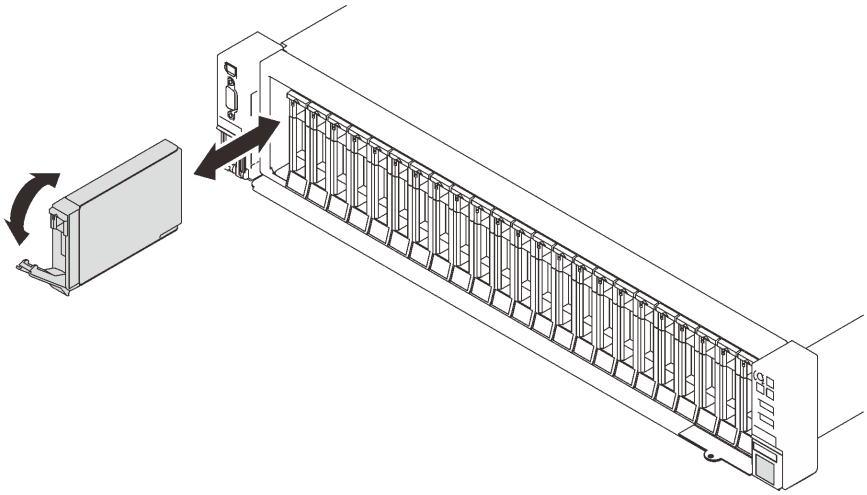

Figure 48. Installing a 2.5-inch drive

Step 4. Rotate the handle back to the locked position.

Demo video

Watch the procedure on YouTube

Install a hot-swap power supply unit

Follow instructions in this section to install a hot-swap power supply unit.

About this task

S002

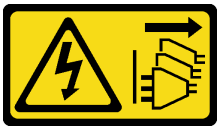

CAUTION:
The power-control button on the device and the power switch on the power supply do not turn off the electrical current supplied to the device. The device also might have more than one power cord. To remove all electrical current from the device, ensure that all power cords are disconnected from the power source.

S029

DANGER

For -48V dc power supply, electrical current from power cords is hazardous.
To avoid a shock hazard:

- **To connect or disconnect -48V dc power cords when you need to remove/replace install redundancy power supply unit(s).**

To Connect:

1. Turn OFF subject dc power source(s) and equipment (s) that are attached to this product.
2. Install the power supply unit(s) into the system housing.
3. Attach dc power cord(s) to the product.
   - Ensure correct polarity of -48 V dc connections: RTN is + and -48 V dc is -. Earth ground should be connected very well.
4. Connect dc power cord(s) to subject power source (s).
5. Turn ON all the power source(s).

To Disconnect:

1. Disconnect or turn off the subject dc power source(s) (at the breaker panel) before removing the power supply unit(s).
2. Remove the subject dc cord(s) and make sure the wire terminal of power cord(s) is insulated.
3. Unplug the subject power supply unit(s) from the system housing.

S035

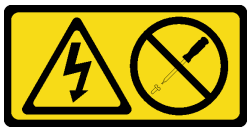

CAUTION:
Never remove the cover on a power supply or any part that has this label attached. Hazardous voltage, current, and energy levels are present inside any component that has this label attached. There are no serviceable parts inside these components. If you suspect a problem with one of these parts, contact a service technician.

Following are the types of power supply units compatible to this server and notices to take during installation. These power supplies are designed for parallel operation. In the event of a power supply failure, the redundant power supply continues to power the system. The server supports a maximum of two power supply units with N+1 redundancy support.

- 750-watt Titanium, input power 230 Vac / 240 VDC
- 1100-watt Platinum, input power 115 Vac / 230 Vac / 240 VDC
- 1100-watt Titanium, input power 230 Vac / 240 VDC
- 1800-watt Platinum, input power 230 Vac / 240 VDC
- 1800-watt Titanium, input power 230 Vac / 240 VDC
- 2400-watt Platinum, input power 230 Vac / 240 VDC
- 2600-watt Titanium, input power 230 Vac / 240 VDC

CAUTION:

- **240 V dc input (input range: 180-300 V dc) is supported in Chinese Mainland ONLY.**
- **Power supply with 240 V dc input cannot support hot-plugging power cord function. Before removing the power supply with dc input, please turn off server or disconnect dc power sources at the breaker panel or by turning off the power source. Then, remove the power cord.**

Procedure

Step 1. Make preparations for this task.

a. Make sure the power supply unit to be installed is of the same wattage as the installed ones. Otherwise, complete the following steps:

1. Turn off the server and peripheral devices.
2. Disconnect the power cords and all external cables.
3. Remove all the installed power supply units.
4. Make sure all the power supply units to be installed are of the same wattage. Do not mix power supply units of different wattages in the same unit of server.

b. If CMA has been installed, do the following:

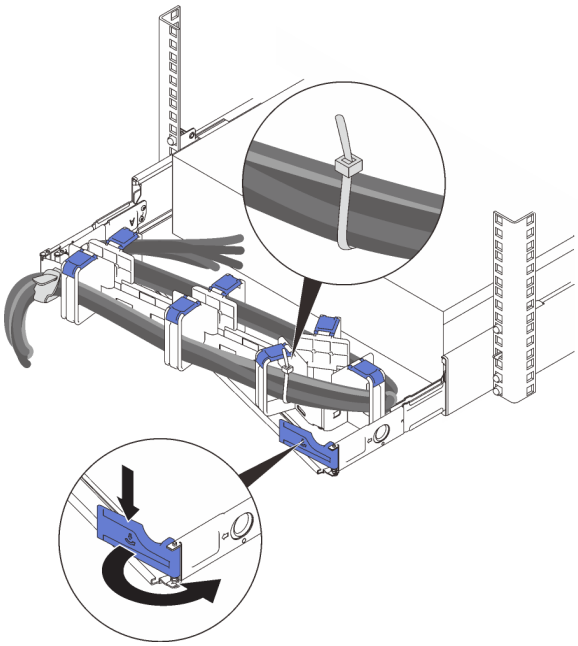

Figure 49. Adjusting CMA

1. Press down the stop bracket and rotate it to the open position.
2. Rotate the CMA out of the way to gain access to the power supply bay.

Note: Make sure the cables are secured to the CMA with cable straps.

c. If you are installing the power supply into an empty bay, remove the power supply filler panel from the power supply bay.

d. If more than one units are to be installed, start with the lowest available power supply bay.

Step 2. Grasp the handle on the rear of the power supply, and slide it into the power-supply bay until it clicks into place.

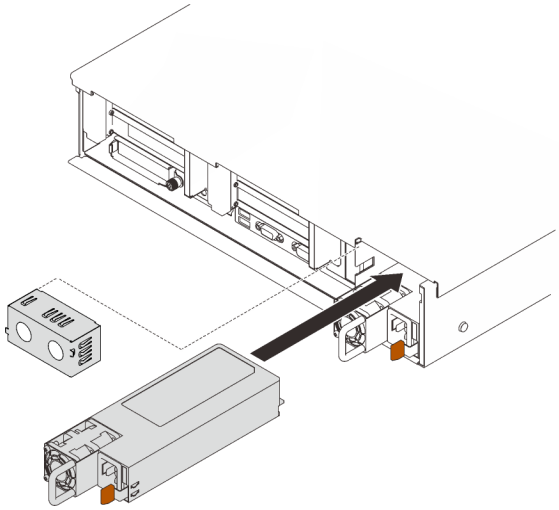

Figure 50. Installing a power supply unit

Demo video

Watch the procedure on YouTube

Remove the top cover

Follow the instructions in this section to remove the top cover.

About this task

S014

CAUTION:
Hazardous voltage, current, and energy levels might be present. Only a qualified service technician is authorized to remove the covers where the label is attached.

S033

CAUTION:
Hazardous energy present. Voltages with hazardous energy might cause heating when shorted with metal, which might result in spattered metal, burns, or both.

Procedure

Step 1. If the top cover is locked, unlock it with a screwdriver (direction 1).

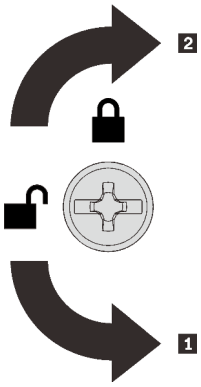

1 Unlocking direction
2 Locking direction

Figure 51. Top cover locking/unlocking direction

Step 2. Remove the top cover from the server.

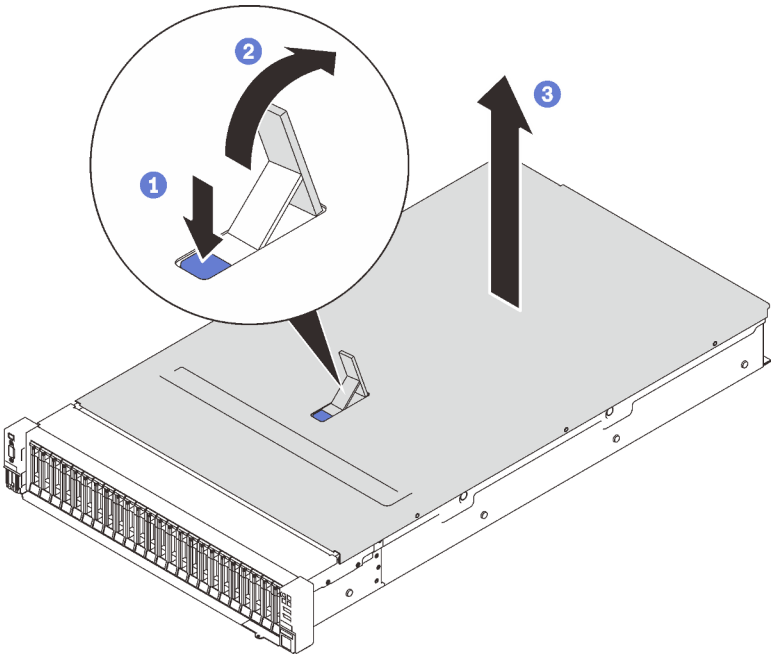

Figure 52. Removing the top cover

1. Press on the blue cover release latch.
2. Rotate the end of the latch up until it is in vertical position.
3. Lift the top cover to remove it.

Demo video

Watch the procedure on YouTube

Remove a 7mm drive

Follow instructions in this section to remove a 7mm drive.

About this task

Procedure

Step 1. Gently rotate the release latch away to unlock the drive handle.

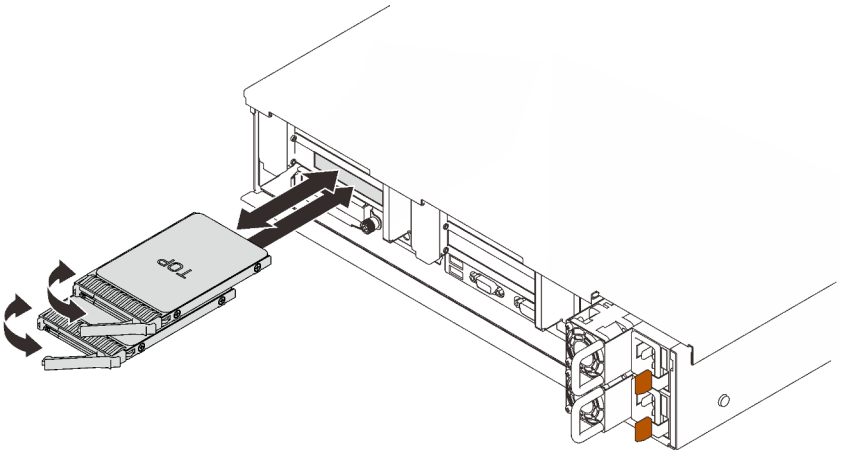

Figure 53. Removing 7mm drives

Step 2. Grasp and pull the handle to remove the drive from the drive bay.

Demo video

Watch the procedure on YouTube

Install server hardware options in the server

Follow the instructions in this section to install server hardware options in the server.

Remove the fan cage assembly

Follow instructions in this section to remove the fan cage assembly.

About this task

S002

CAUTION:
The power-control button on the device and the power switch on the power supply do not turn off the electrical current supplied to the device. The device also might have more than one power cord. To remove all electrical current from the device, ensure that all power cords are disconnected from the power source.

S017

CAUTION:
Hazardous moving fan blades nearby. Keep fingers and other body parts away.

Procedure

Step 1. Lift and rotate the fan cage release latches to disengage the fan cage assembly from the server.

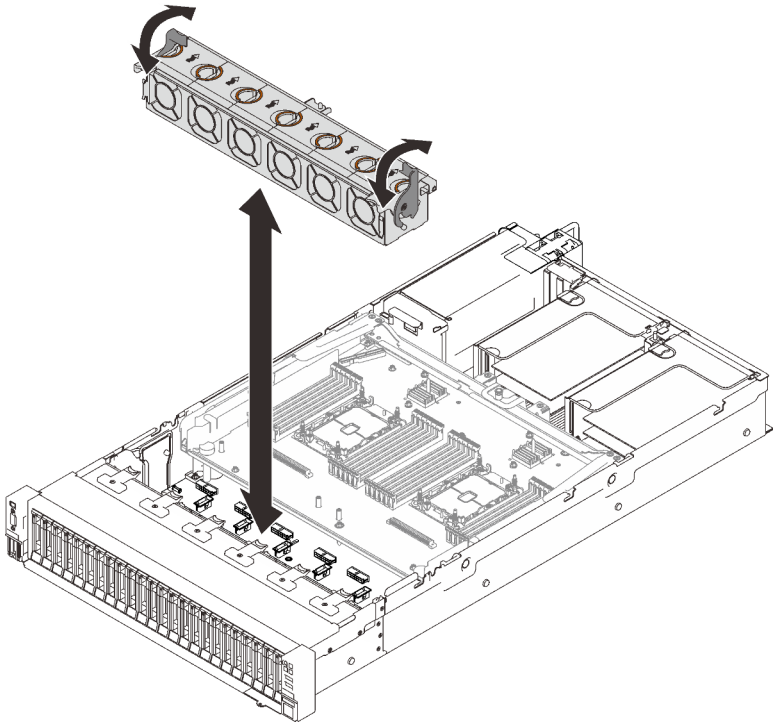

Figure 54. Removing the fan cage assembly

Step 2. Lift the fan cage assembly to remove it.

Demo video

Watch the procedure on YouTube

Install a drive backplane

Follow instruction in this section to install a drive backplane.

About this task

Procedure

Step 1. Install the drive backplane.

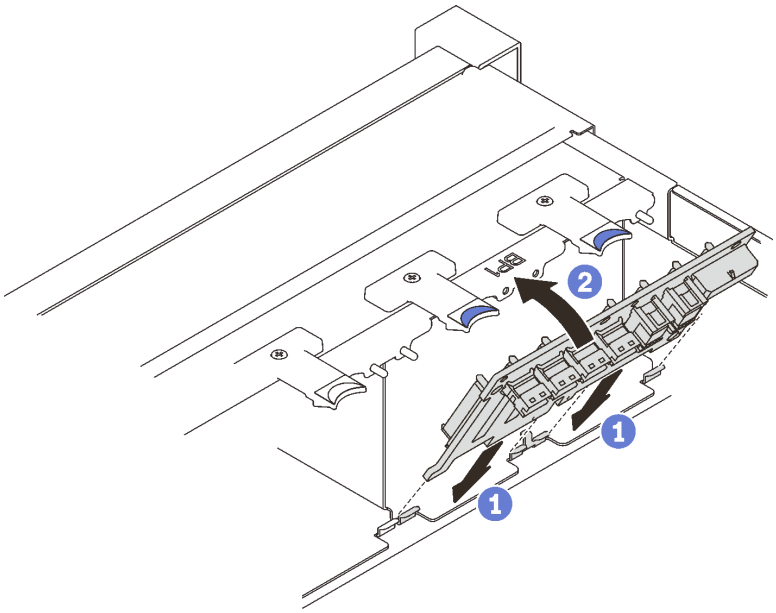

Figure 55. Installing the drive backplane

1. Align the tabs on the bottom of the drive backplane with the slots on the system board, and insert them into the slots.
2. Push the top of the drive backplane forward until it clicks in place.

Demo video

Watch the procedure on YouTube

Install the intrusion switch

Follow instructions in this section to install the intrusion switch.

About this task

Procedure

Procedure

Step 1. Align the intrusion switch with the slot between the two riser zones, and push it in.

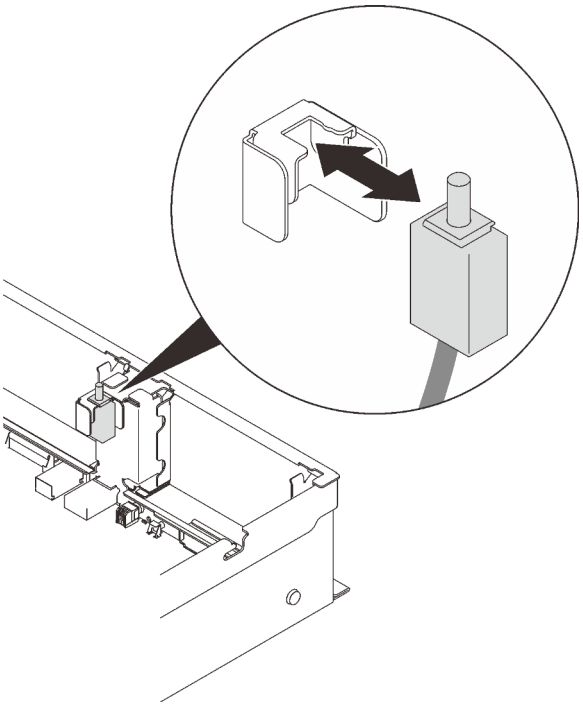

Figure 56. Installing the intrusion switch

Step 2. Connect the cable to the system board. See "System board connectors" on page 30 to locate the connector on the system board.

Demo video

Watch the procedure on YouTube

Remove the PCIe riser assembly

Follow instructions in this section to remove the PCIe riser assembly.

About this task

Two zones could be installed with a PCIe riser assembly. See the following instructions based on the location of the riser:

- **Zone 1** (PCIe slot 1 to 3): "Remove the PCIe riser assembly from zone 1" on page 142
- **Zone 2** (PCIe slot 5 to 6): "Remove the PCIe riser assembly from zone 2" on page 143

Remove the PCIe riser assembly from zone 1

Procedure

Step 1. Grasp and lift the PCIe riser assembly to remove it from the system board.

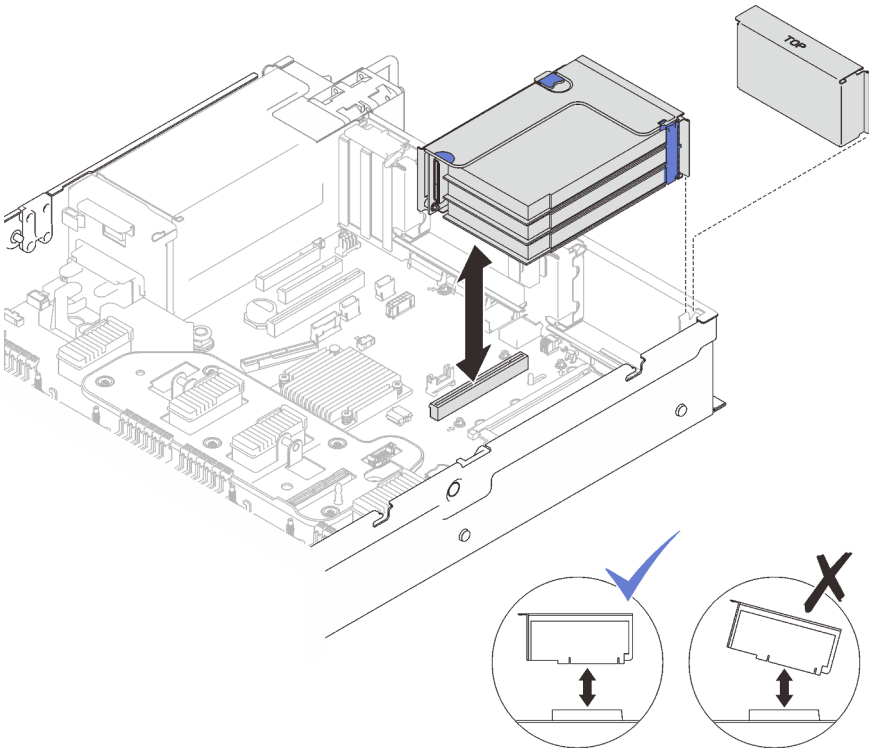

Figure 57. Removing the PCIe riser assembly from zone 1

Demo video

Watch the procedure on YouTube

Remove the PCIe riser assembly from zone 2

Procedure

Step 1. Remove the PCIe riser assembly.

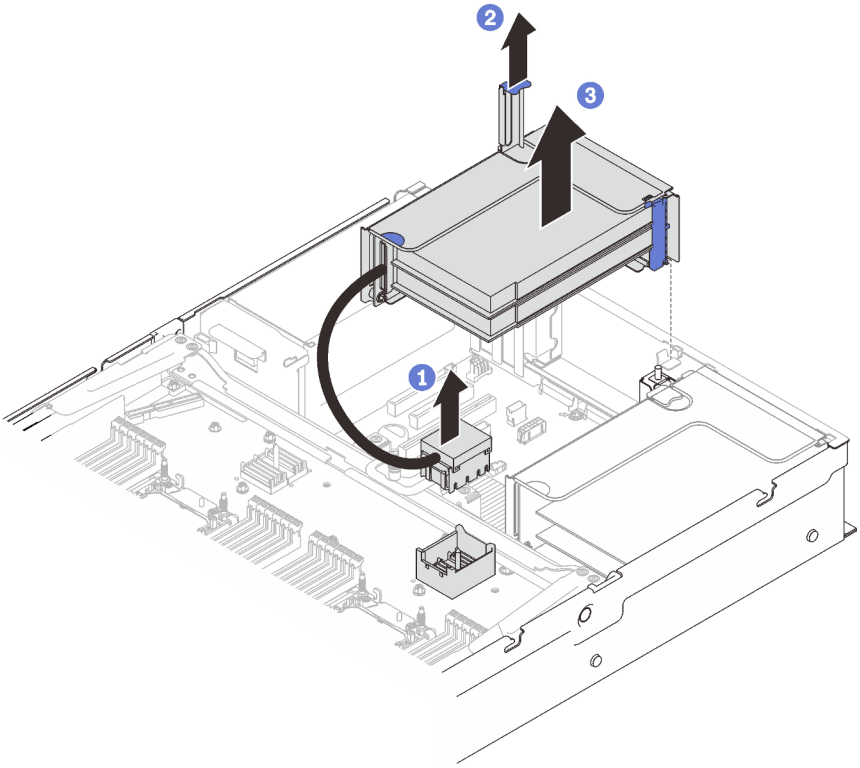

Figure 58. Removing the PCIe riser assembly from zone 2

1. Grasp the PCIe connector, and lift it gently and evenly to remove it from the processor and memory expansion tray.
2. Pull the riser handle up.
3. Lift and remove the PCIe riser assembly.

Demo video

Watch the procedure on YouTube

Install an adapter

Follow the instructions in this section to install an adapter.

About this task

Notes:

- For a list of supported adapters, see https://serverproven.lenovo.com/server/sr850-v2.
- The following adapters must be installed in the PCIe riser assembly.
  - ThinkSystem Broadcom 57454 10/25GbE SFP28 4-port PCIe Ethernet Adapter
  - ThinkSystem Broadcom 57454 10/25GbE SFP28 4-port PCIe Ethernet Adapter V2
  - ThinkSystem Broadcom 57504 10/25GbE SFP28 4-port PCIe Ethernet Adapter

Install an adapter on the system board

Procedure

Step 1. Open the retention latch.

Step 2. If a filler has been installed in the PCIe slot, remove the screw that secures it, and remove the filler.

Step 3. Align the adapter with the connector on the system board, and push it in.

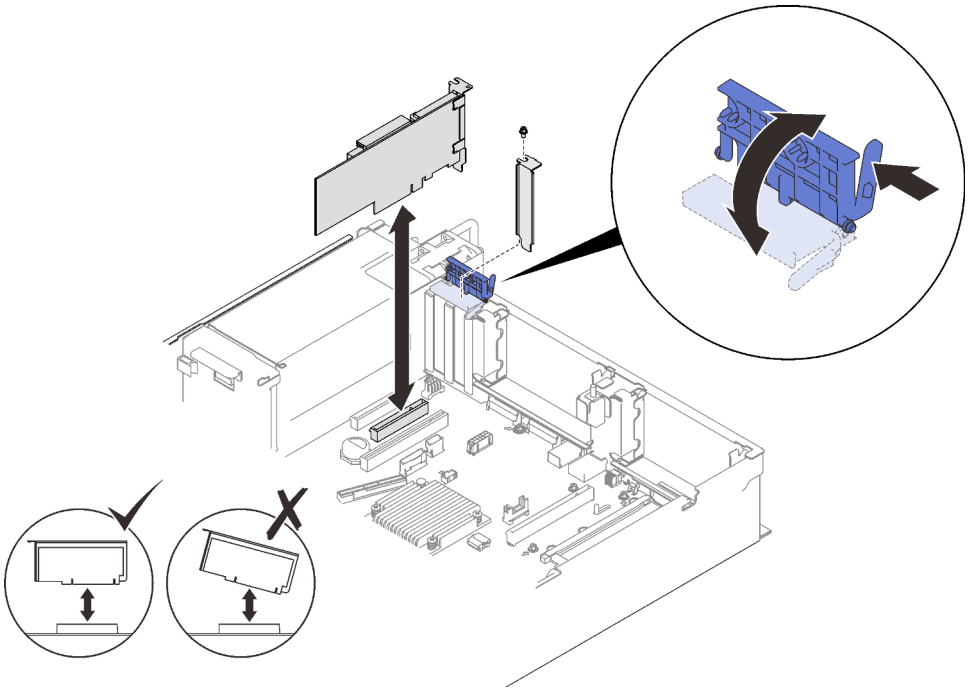

Figure 59. Installing an adapter to the system board

Step 4. Secure the adapter with a screw.

Step 5. Close the retention latch.

Install an adapter in the PCIe riser assembly

Important: Make sure to adopt passive Direct Attach cables when ThinkSystem NVIDIA ConnectX-7 adapter is installed.

Notes:

- When installing the following adapters:
  - Nvidia T4
  - Mellanox ConnectX-6 HDR 100/100GbE QSFP56 1-port PCIe VPI Adapter
  - Mellanox ConnectX-6 HDR 100/100GbE QSFP56 2-port PCIe VPI Adapter
  - Mellanox ConnectX-6 HDR/200GbE QSFP56 1-port PCIe 4 VPI Adapter
  - ThinkSystem NVIDIA ConnectX-7 NDR200/200GbE QSFP112 2-port PCIe Gen5 x16 InfiniBand Adapter
  - ThinkSystem NVIDIA ConnectX-7 NDR400 OSFP 1-Port PCIe Gen5 Adapter

  make sure to adopt the following risers and PCIe slots, and do not install any other adapters to the risers:
  - Zone 1: **slot 1** in x16/x16/x16 (x8 lanes) riser

  - Zone 2: **slot 5** in x16/x16 riser
- When installing two units of Nvidia T4, make sure to meet the following system requirements.
  - Maximal capacity of each memory module is 64 GB.
  - Maximal quantity depends on processors wattage:
    - Less than 165 watts: 48
    - 165 to 250 watt: 24
  - Maximal quantity of 2.5-inch drives is 16.
- NVMe PCIe 4.0 x8 Flash Adapter has to be installed in slot 1, 5, 7, or 8.
- When Nvidia T4 is installed:
  - If OCP Ethernet adapter is installed in slot 4, slot 7 is disabled.
  - If an adapter is installed in slot 7, slot 4 is disabled.
- To prevent potential thermal issues, change the **Misc** setting in the BIOS from **Option3** (default value) to **Option1** if the following two conditions are met:
  - The server is equipped with a GPU adapter.
  - The UEFI firmware version is M5E128A or later.

  For the method of changing the **Misc** setting, see https://support.lenovo.com/us/en/solutions/TT1832.

Procedure

Step 1. Open the retaining bracket on the PCIe riser assembly.

Step 2. If a filler has been installed to the slot on the riser, remove the screw that secures it and remove the filler.

Step 3. Align the adapter with the connector on the PCIe riser assembly, and push it in.

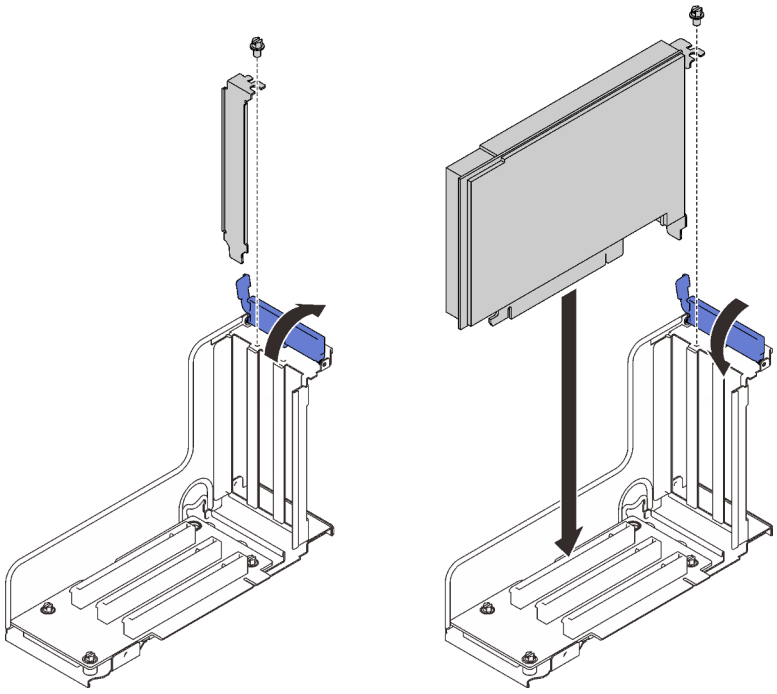

Figure 60. Installing an adapter into the PCIe riser assembly

Step 4. Secure the adapter with a screw.

Step 5. Close the retention latch.

After this task is completed

- If one of the following adapters has been installed and there is only one or no installed flash power module in the system, install a flash power module (see "Install a flash power module and holder" on page 147).
  - ThinkSystem RAID 930-8i 2GB Flash PCIe 12Gb Adapter
  - ThinkSystem RAID 930-16i 4GB Flash PCIe 12Gb Adapter
  - ThinkSystem RAID 930-8e 4GB Flash PCIe 12Gb Adapte
  - ThinkSystem RAID 940-8i 4GB Flash PCIe Gen4 12Gb Adapter
  - ThinkSystem RAID 940-8i 8GB Flash PCIe Gen4 12Gb Adapter
  - ThinkSystem RAID 940-16i 8GB Flash PCIe 12Gb Adapter
  - ThinkSystem RAID 940-32i 8GB Flash PCIe 12Gb Adapter

Demo video

Watch the procedure on YouTube

Install a flash power module and holder

Follow instructions in this section to install a flash power module and holder.

About this task

Flash power module holder kit comes with the following RAID adapters:

- ThinkSystem RAID 930-8i 2GB Flash PCIe 12Gb Adapter
- ThinkSystem RAID 930-16i 4GB Flash PCIe 12Gb Adapter
- ThinkSystem RAID 930-8e 4GB Flash PCIe 12Gb Adapte
- ThinkSystem RAID 940-8i 4GB Flash PCIe Gen4 12Gb Adapter
- ThinkSystem RAID 940-8i 8GB Flash PCIe Gen4 12Gb Adapter
- ThinkSystem RAID 940-16i 8GB Flash PCIe 12Gb Adapter
- ThinkSystem RAID 940-32i 8GB Flash PCIe 12Gb Adapter

Consider the following rules to determine the type of holder to install:

- This server supports up to **two** units of flash power modules.
- In the option kit, two types of holders are included:

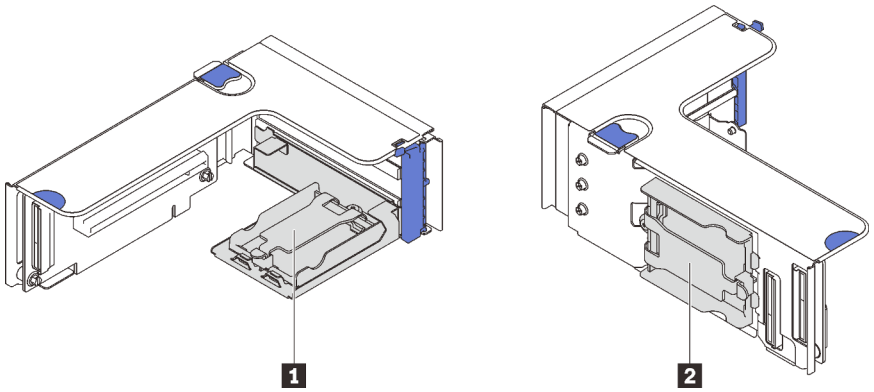

Figure 61. Flash power module holders

1 Horizontal holders can be installed in zone 1 or 2 risers, but to avoid blocking PCIe connectors in the riser assembly, it is suggested that:

- When installing one horizontal holder into a riser, only adopt the following risers:
  - Zone 1: "x16/x16 (x8 lanes) FH/HL PCIe riser" on page 111
  - Zone 2: "x16/x16 FH/HL PCIe riser" on page 113
- When installing two horizontal holders into a riser, only adopt the riser bracket that is enclosed in the "Flash power module holder kit" on page 108.

2 The vertical holder has to be installed to one of the following zone 1 risers:

- "x16/x16 (x8 lanes) FH/HL PCIe riser" on page 111
- "x16/x16 (x8 lanes) FH/HL PCIe riser with 7mm drive cage bracket" on page 112
- "x16/x16/x16 PCIe riser" on page 113

Install a flash power module and vertical holder

Procedure

Step 1. Install the flash power module holder to the riser.

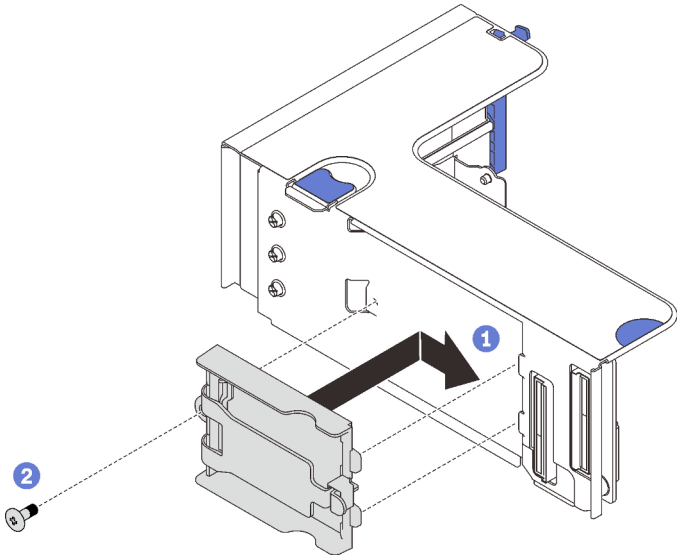

Figure 62. Installing the vertical holder

1. Align the holder to the slot on the riser, and slide it backward slightly.
2. Secure the holder to the side of the riser with a screw.

Step 2. Install the flash power module.

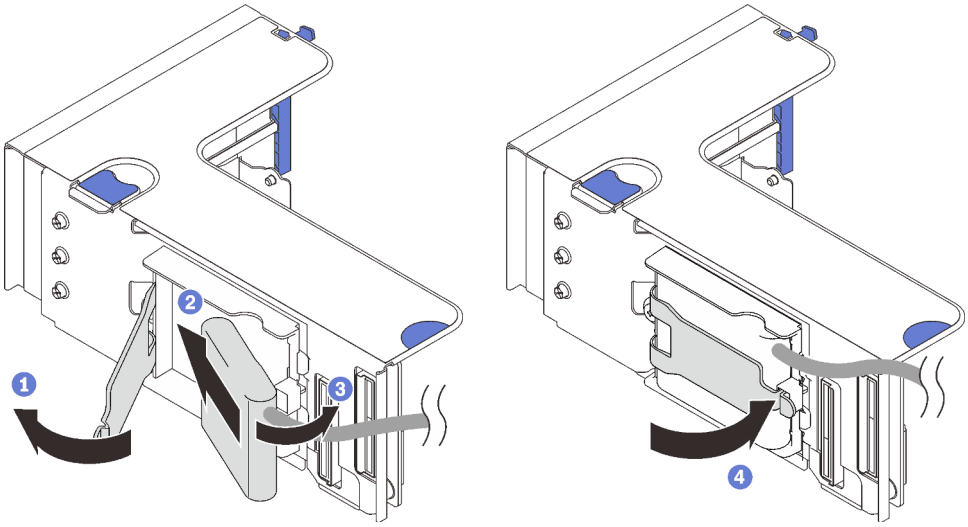

Figure 63. Installing the flash power module

1. Press and release the retaining latch.
2. Align the flash power module with the holder hinge.
3. Rotate the other end of the module inward until it is secured in the holder.
4. Close the retaining latch.

Demo video

Watch the procedure on YouTube

Install a flash power module and horizontal holder

Procedure

Step 1. Start with the bottom slot of the riser. Slide the holder bracket into the riser, and secure it with a screw.

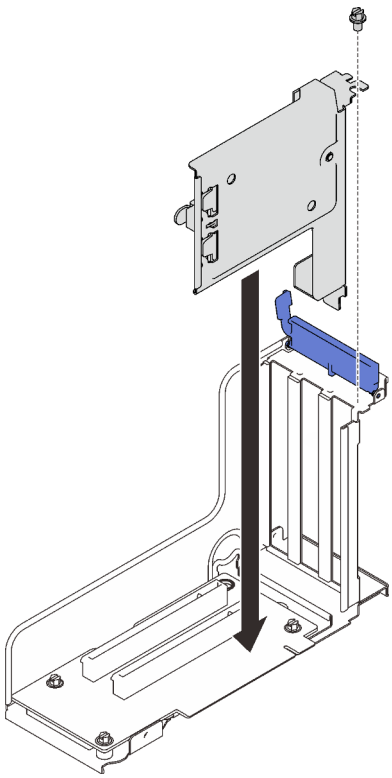

Figure 64. Installing the flash power module bracket into the riser

Step 2. Install the flash power module.

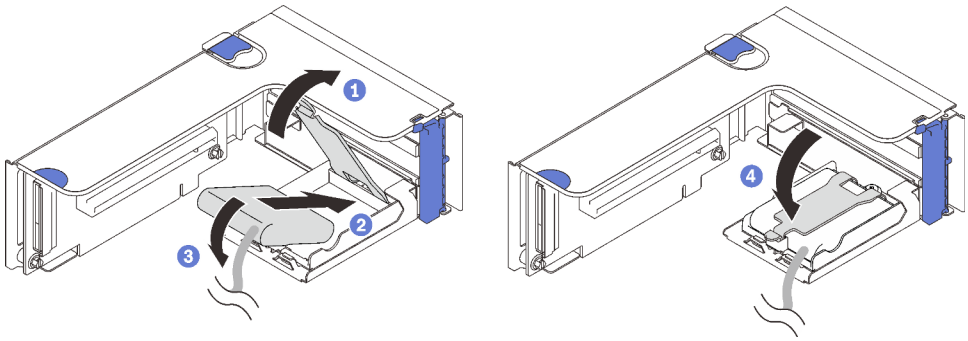

Figure 65. Installing the flash power module

1. Press and release the retaining latch.
2. Align the flash power module with the holder hinge.
3. Rotate the other end of the module inward until it is secured in the holder.
4. Close the retaining latch.

Demo video

Watch the procedure on YouTube

Install the OCP Ethernet adapter

Follow instructions in this section to install the OCP Ethernet adapter.

About this task

Procedure

Step 1. Install the OCP Ethernet adapter air baffle.

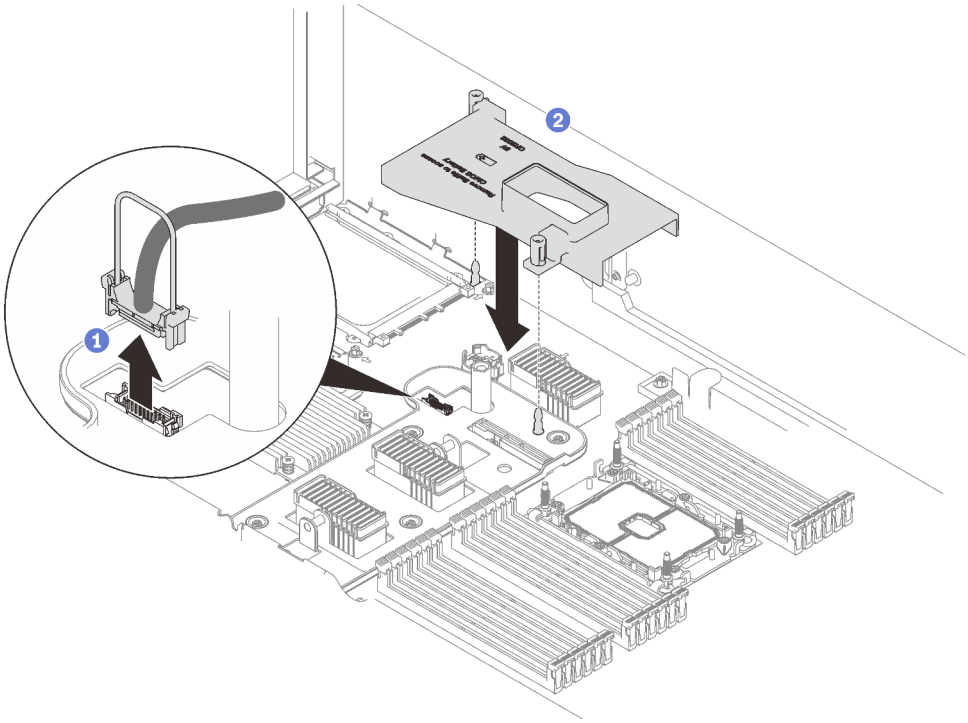

Figure 66. Installing the OCP adapter air baffle

1. Grasp and lift the handle to disconnect the USB cable from the system board.
2. Align the OCP adapter air baffle to the guide pin, and install the air baffle to the system board.

Step 2. Install the OCP Ethernet adapter.

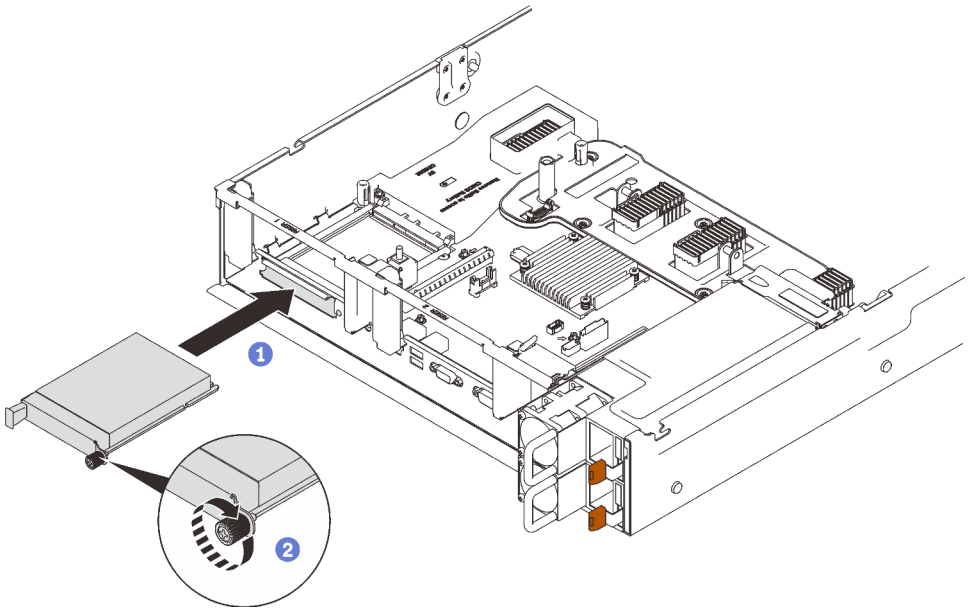

Figure 67. Installing the OCP Ethernet adapter

1. Slide the adapter into the PCIe slot.
2. Tighten the captive screw to secure the adapter.

Step 3. Reconnect the front USB cable.

Demo video

Watch the procedure on YouTube

Install the PCIe riser assembly

Follow instructions in this section to install the PCIe riser assembly.

About this task

Two zones could be installed with a PCIe riser assembly. See the following instructions for supported risers and installation procedure.

- **Zone 1** (PCIe slot 1 to 3):
  - This zone supports the following types of riser assembly:
    - "x16/x16/x16 PCIe riser" on page 113
    - "x16/x16 (x8 lanes) FH/HL PCIe riser" on page 111
    - "x16/x16 (x8 lanes) FH/HL PCIe riser with 7mm drive cage bracket" on page 112
  - Follow the instructions in "Install the PCIe riser assembly to zone 1" on page 153 to install a riser assembly.
- **Zone 2** (PCIe slot 5 to 6):
  - This zone supports "x16/x16 FH/HL PCIe riser" on page 113.
  - Follow the instructions in "Install the PCIe riser assembly to zone 2" on page 154 to install a riser assembly.

Install the PCIe riser assembly to zone 1

Procedure

Step 1. Align the PCIe riser assembly with the connector on the system board, and push it in.

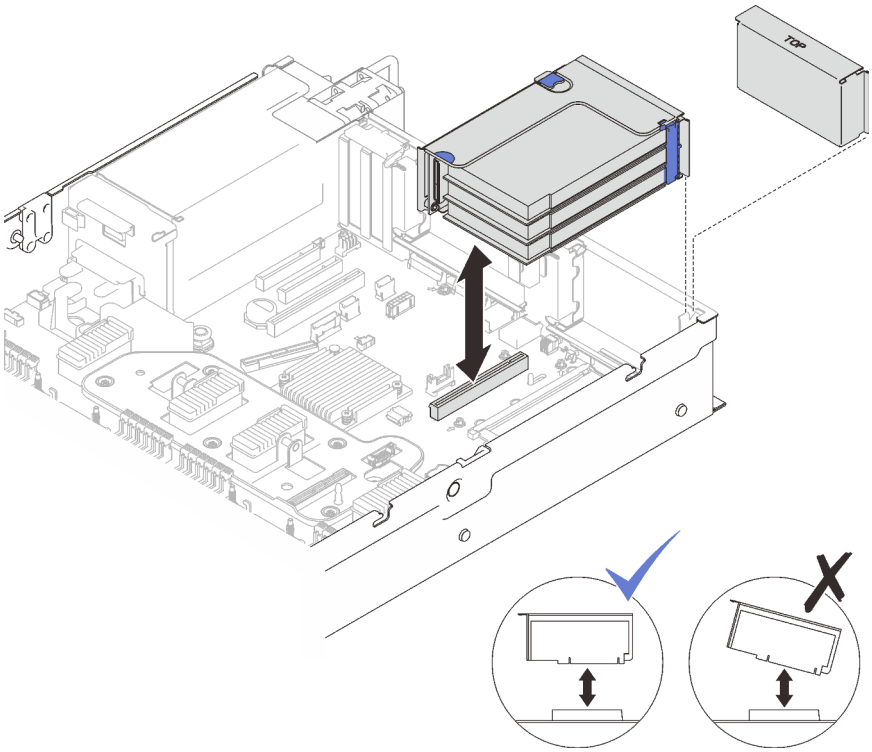

Figure 68. Installing the PCIe riser assembly to zone 1

Step 2. If you are installing x16/x16/x16 riser assembly, connect the two PCIe cables to the system board.

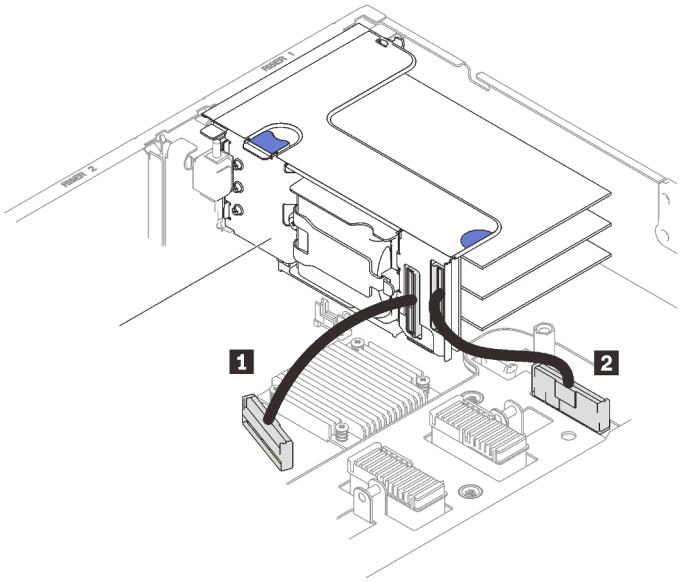

Figure 69. Connecting PCIe cables from x16/x16/x16 riser to the system board

1 PCIe connector 1	2 PCIe connector 2

Demo video

Watch the procedure on YouTube

Install the PCIe riser assembly to zone 2

Procedure

Step 1. Install the PCIe riser assembly to zone 2.

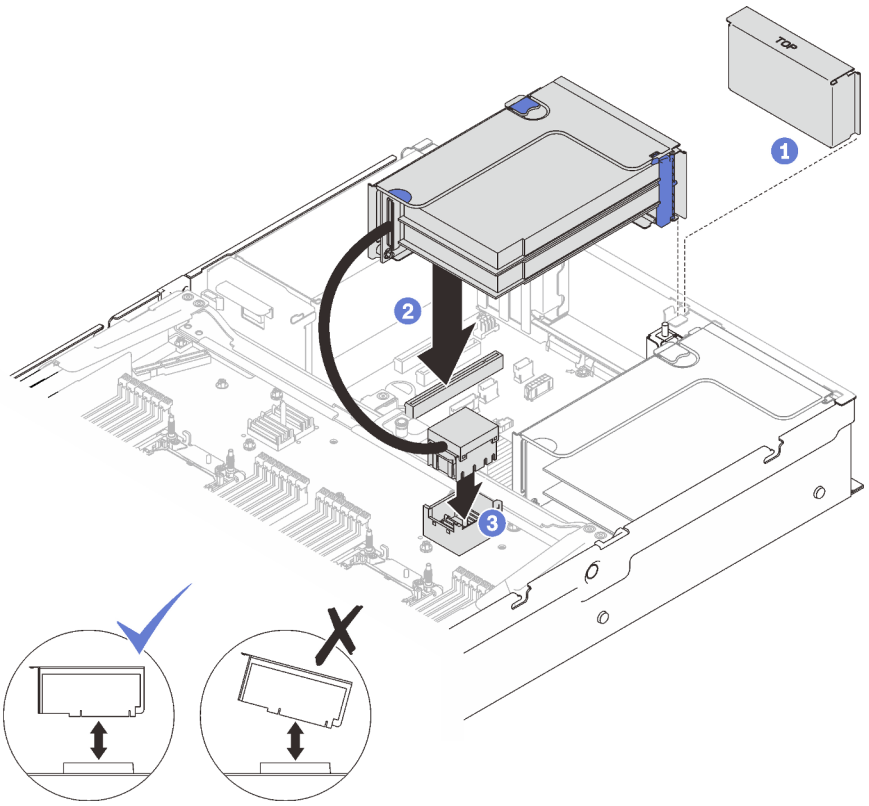

Figure 70. Installing the PCIe riser assembly to zone 2

1. If a filler has been installed, remove it.
2. Align the PCIe riser assembly with the connector on the system board, and push it in.
3. Connect the PCIe cable to PCIe connector 5 on the processor and memory expansion tray.

After this task is completed

1. Reconnect all the required cables.

Demo video

Watch the procedure on YouTube

Remove the system board air baffle

Follow instructions in this section to remove the system board air baffle.

About this task

Procedure

Step 1. Lift the system air baffle to remove it from the server.

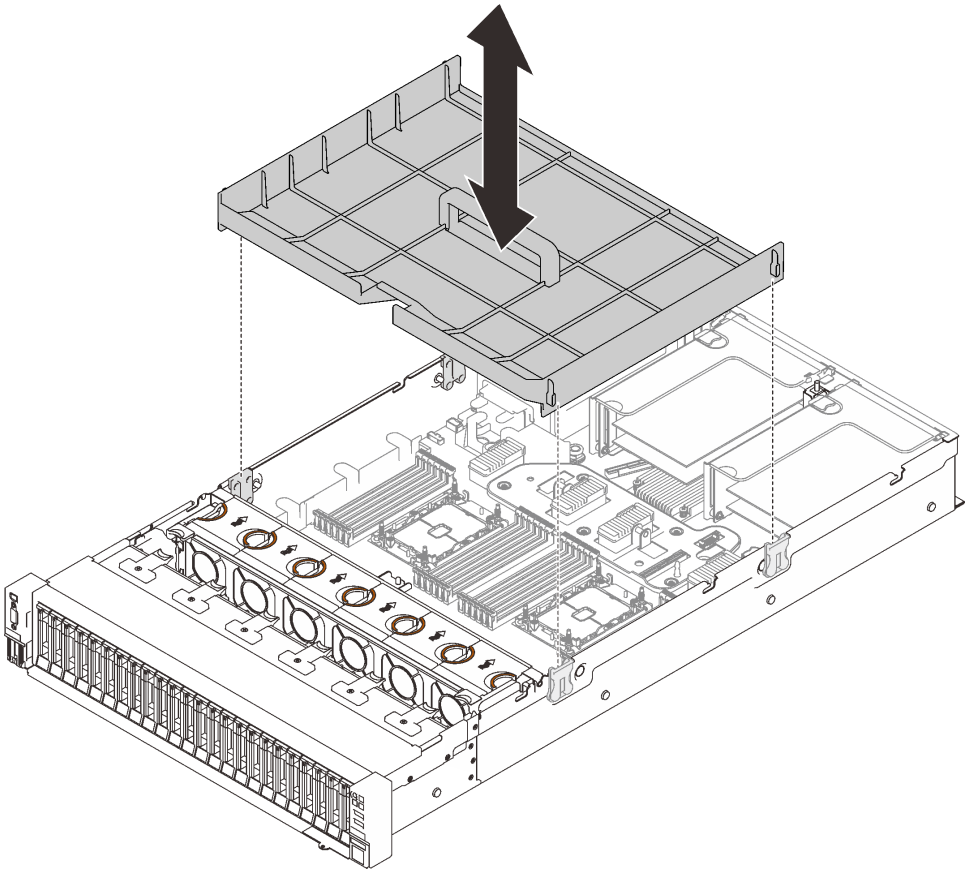

Figure 71. Removing the system board air baffle

Demo video

Watch the procedure on YouTube

Remove the processor and memory expansion tray

Follow instructions in this section to remove the processor and memory expansion tray.

About this task

Procedure

Step 1. Disengage the processor and memory expansion tray.

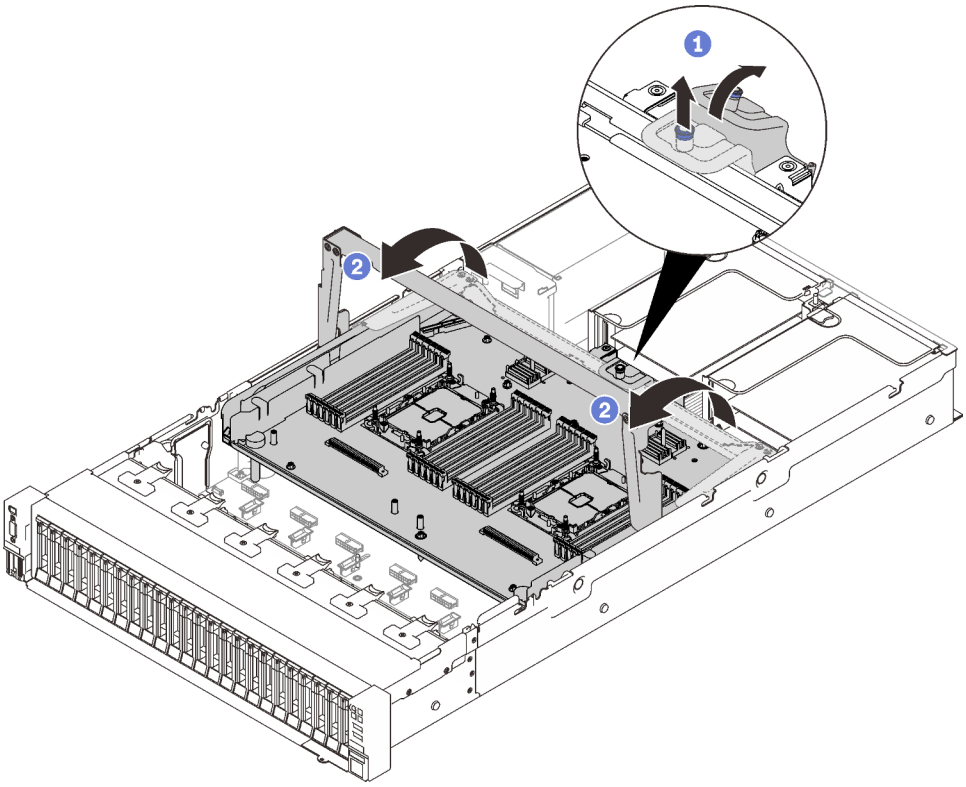

Figure 72. Disengaging the processor and memory expansion tray

1. Grasp and pull the captive screw up; then, push it forward to disengage the handle.
2. Rotate the handle all the way up until it is in the vertical position.

Step 2. If the two PCIe cables are connected, disconnect them.

Attention: To avoid damaging the system board, make sure to follow the instructions in Chapter 3 "Internal cable routing" on page 43 when disconnecting cables from the system board.

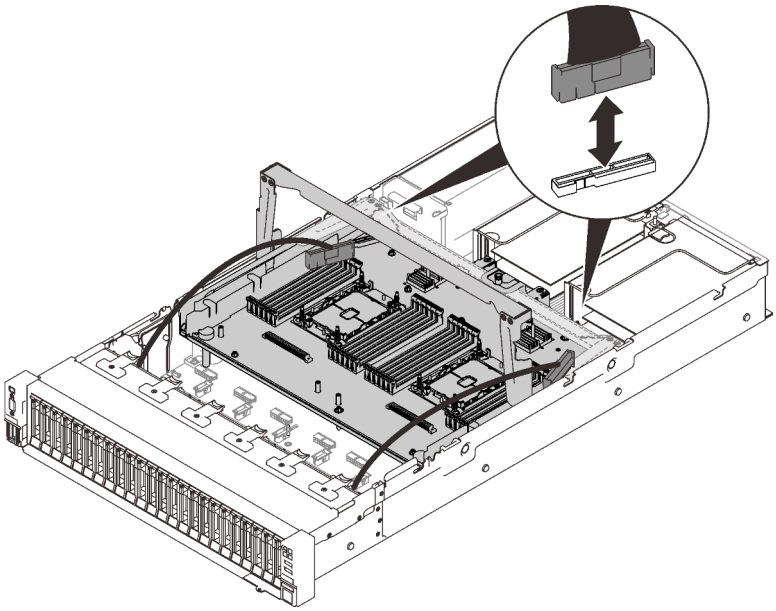

Figure 73. Disconnecting PCIe cables

Step 3. Lift the expansion tray and remove it.

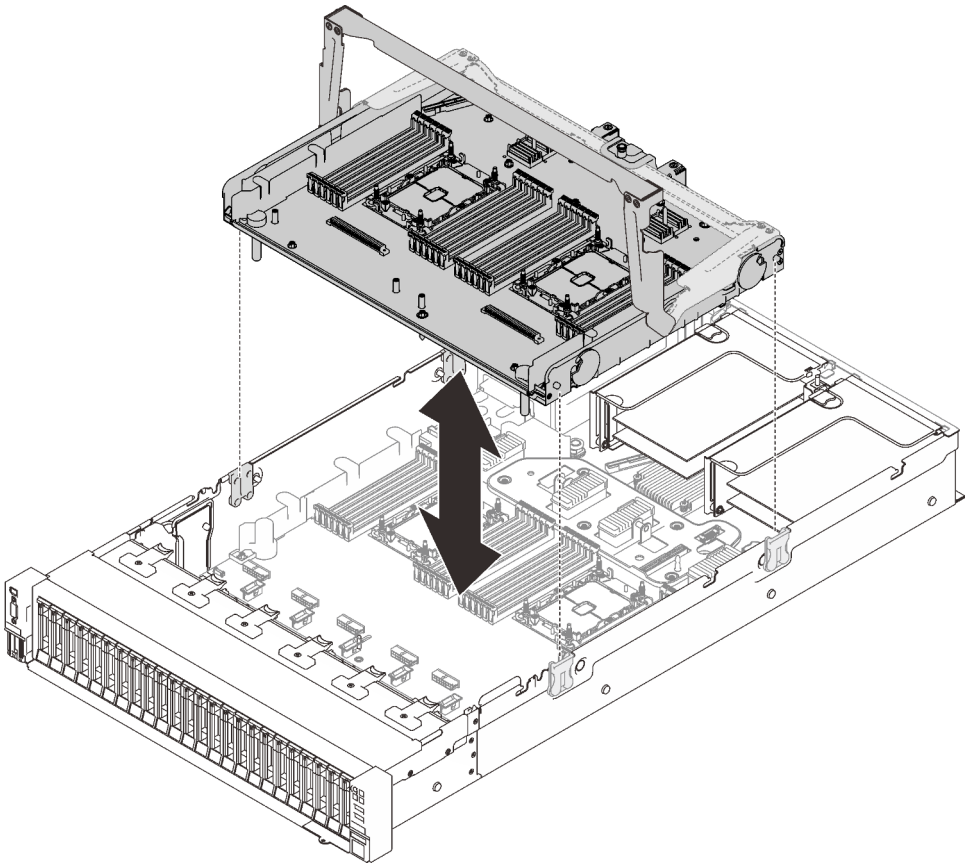

Figure 74. Removing the processor and memory expansion tray

Disassemble the processor and memory expansion tray for recycle

Follow the instructions in this section to disassemble the processor and memory expansion tray before recycle.

About this task

Procedure

Step 1. Make preparations for this task.

a. Remove the processor and memory expansion tray from the server (see "Remove the processor and memory expansion tray" on page 155).

b. Refer to local environmental, waste or disposal regulations to ensure compliance.

Step 2. Remove the following components as illustrated:

- Nine slotted screws
- Two standoffs (with 12 mm wrench)

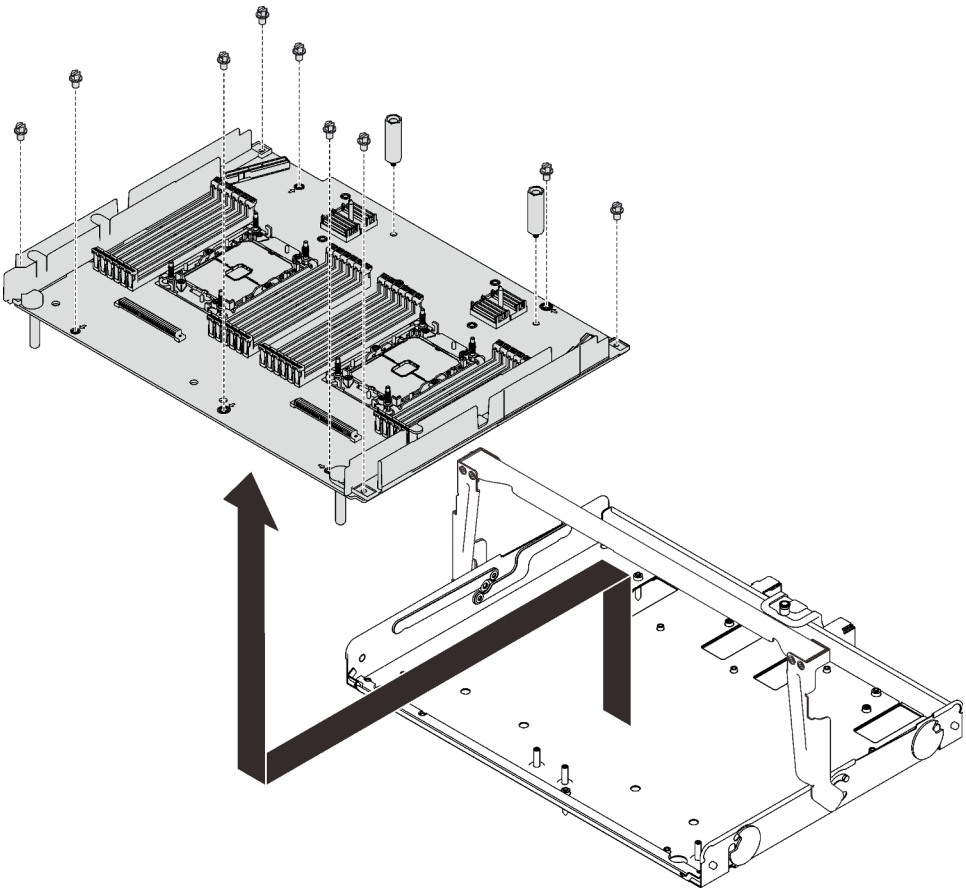

Figure 75. Disassembling the expansion tray

Step 3. Separate the expansion board from the supporting tray.

After this task is completed

Recycle the unit in compliance with local regulations.

Install a processor-heat-sink module

The processor and heat sink are removed together as part of a processor-heat-sink-module (PHM) assembly. PHM installation requires a Torx T30 driver.

About this task

Attention:

- Touch the static-protective package that contains the component to any unpainted metal surface on the server; then, remove it from the package and place it on a static-protective surface.
- Power off the server and disconnect all power cords for this task.
- Prevent exposure to static electricity, which might lead to system halt and loss of data, by keeping static-sensitive components in their static-protective packages until installation, and handling these devices with an electrostatic-discharge wrist strap or other grounding system.
- Each processor socket must always contain a cover or a PHM. When removing or installing a PHM, protect empty processor sockets with a cover.
- Do not touch the processor socket or processor contacts. Processor-socket contacts are very fragile and easily damaged. Contaminants on the processor contacts, such as oil from your skin, can cause connection failures.
- Do not allow the thermal grease on the processor or heat sink to come in contact with anything. Contact with any surface can compromise the thermal grease, rendering it ineffective. Thermal grease can damage components, such as the electrical connectors in the processor socket.
- Remove and install only one PHM at a time. If the system board supports multiple processors, install the PHMs starting with the first processor socket.

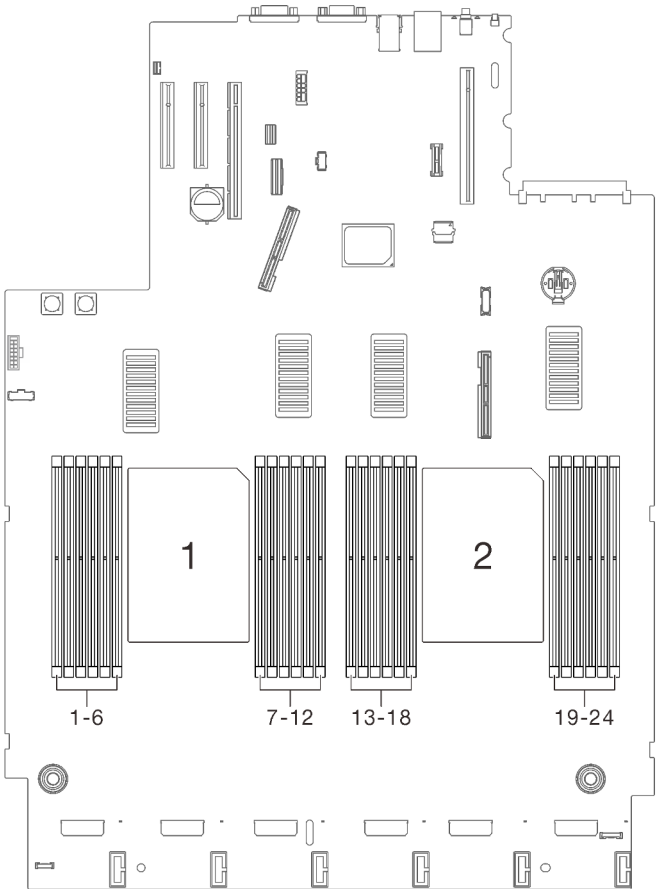

Figure 76. Processor 1 and 2 location on the system board

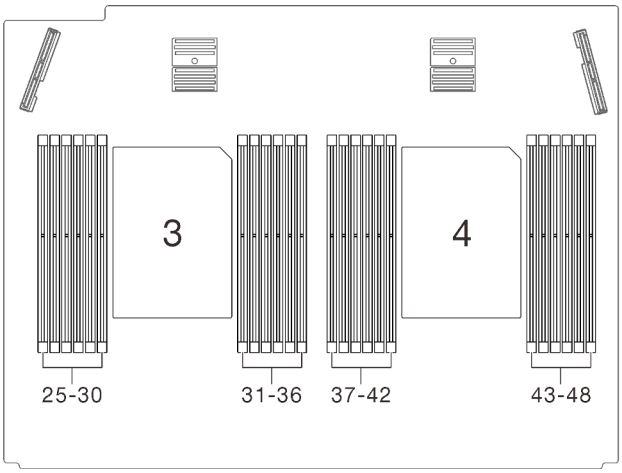

Figure 77. Processor 3 and 4 location on the processor and memory expansion tray

Notes:

- The heat sink, processor, and processor carrier for your system might be different from those shown in the illustrations.
- PHMs are keyed for the socket where they can be installed and for their orientation in the socket.

- See https://serverproven.lenovo.com/ for a list of processors supported for your server. All processors on the system board must have the same speed, number of cores, and frequency.
- Before you install a new PHM or replacement processor, update your system firmware to the latest level. See “Update the firmware” on page 177.
- Installing an additional PHM can change the memory requirements for your system. See “Install a memory module” on page 162 for a list of processor-to-memory relationships.

The following illustration shows the components of the PHM.

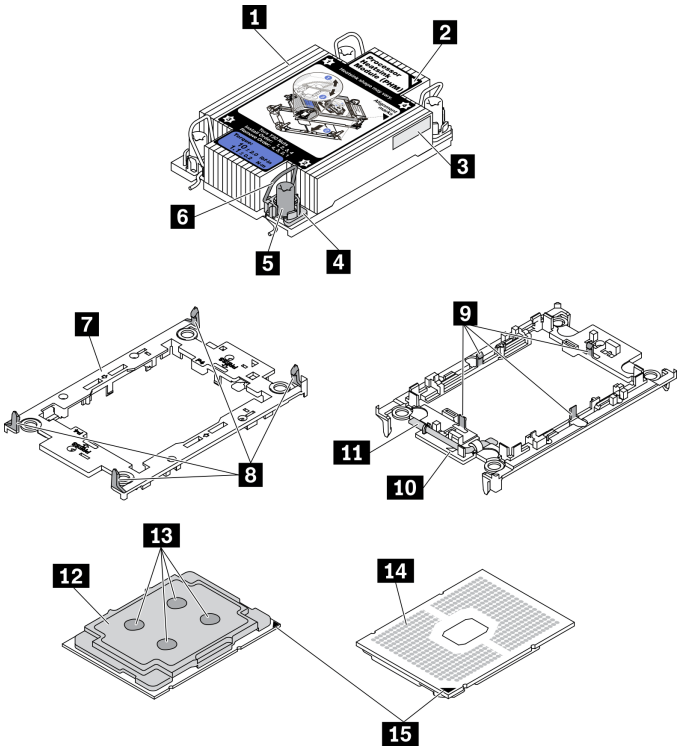

Figure 78. PHM components

1 Heat sink	9 Clips to secure processor in carrier
2 Heat sink triangular mark	10 Carrier triangular mark
3 Processor identification label	11 Processor ejector handle
4 Nut and wire bail retainer	12 Processor heat spreader
5 Torx T30 nut	13 Thermal grease
6 Anti-tilt wire bail	14 Processor contacts
7 Processor carrier	15 Processor triangular mark
8 Clips to secure carrier to heat sink	

Procedure

Step 1. Remove the processor socket cover, if one is installed on the processor socket, by placing your fingers in the half-circles at each end of the cover and lifting it from the system board.

Step 2. Install the processor-heat-sink module into the system board socket.

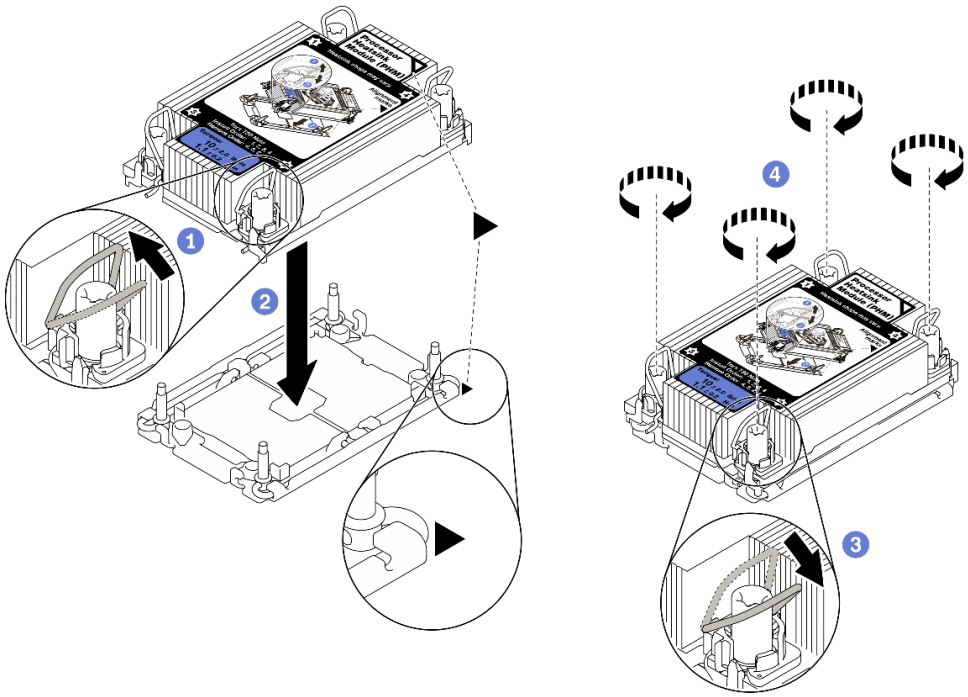

Figure 79. Installing a PHM

1. Rotate the anti-tilt wire bails inward.
2. Align the triangular mark and four Torx T30 nuts on the PHM with the triangular mark and threaded posts of the processor socket; then, insert the PHM into the processor socket.
3. Rotate the anti-tilt wire bails outward until they engage with the hooks in the socket.
4. Fully tighten the Torx T30 nuts *in the installation sequence shown* on the heat-sink label. Tighten the screws until they stop; then, visually inspect to make sure that there is no gap between the screw shoulder beneath the heat sink and the processor socket. (For reference, the torque required for the fasteners to fully tighten is 1.1 newton-meters, 10 inch-pounds).

Demo video

Watch the procedure on YouTube

Install a memory module

Follow instructions in this section to install a memory module.

About this task

See "Memory module installation order" on page 121 for detailed information about memory configuration and setup.

"ATTENTION:
Static Sensitive Device
Ground package before opening"
on page 120

Attention: Memory modules are sensitive to static discharge and require special handling. In addition to the standard guidelines for "Handling static-sensitive devices" on page 120:

- Always wear an electrostatic-discharge strap when removing or installing memory modules. Electrostatic-discharge gloves can also be used.
- Never hold two or more memory modules together so that they touch. Do not stack memory modules directly on top of each other during storage.
- Never touch the gold memory module connector contacts or allow these contacts to touch the outside of the memory-module connector housing.
- Handle memory modules with care: never bend, twist, or drop a memory module.
- Do not use any metal tools (such as jigs or clamps) to handle the memory modules, because the rigid metals may damage the modules.
- Do not insert memory modules while holding packages or passive components, which can cause package cracks or detachment of passive components by the high insertion force.
- Make sure to adopt one of the supported configurations that is listed in "Memory module installation order" on page 121.
- In the case of installing PMEMs for the first time, read the rules and instructions in "PMEM and DRAM DIMM installation order" on page 126 carefully, and make sure to adopt a supported configuration.

Important:

- If you are installing memory modules on the processor and memory expansion tray, **do not** remove the expansion tray. Install the modules while the expansion tray is installed in the chassis to avoid accidental damages to components.
- Ensure that you have observed the installation rules and sequence in "Memory module installation order" on page 121.

Procedure

Step 1. If any of the modules to be installed is PMEM, make sure to complete the following procedure before physically installing the module:

1. Back up stored data in PMEM namespaces.
2. Disable PMEM security with one of the following options:
   - **LXPM**

     Go to **UEFI Setup → System Settings → Intel Optane PMEMs → Security → Press to Disable Security**, and input passphrase to disable security.
   - **Setup Utility**

     Go to **System Configuration and Boot Management → System Settings → Intel Optane PMEMs → Security → Press to Disable Security**, and input passphrase to disable security.
3. Delete namespaces with command corresponding to the operating system that is installed:
   - **Linux** command:
     ```
     ndctl destroy-namespace all -f
     ndctl destroy-namespace all -f
     ```
   - **Windows** Powershell command
     ```
     Get-PmemDisk | Remove-PmemDisk
     ```
4. Clear Platform Configuration Data (PCD) and Namespace Label Storage Area (LSA) with the following ipmctl command (for both Linux and Windows).
   ```
   ipmctl delete -pcd
   ```

Notes: See the following links to learn how to download and use impctl in different operating systems:

- Windows: https://datacentersupport.lenovo.com/us/en/videos/YTV101407
- Linux: https://datacentersupport.lenovo.com/us/en/solutions/HT508642

5. Reboot the system.

Step 2. Install the memory module into the slot.

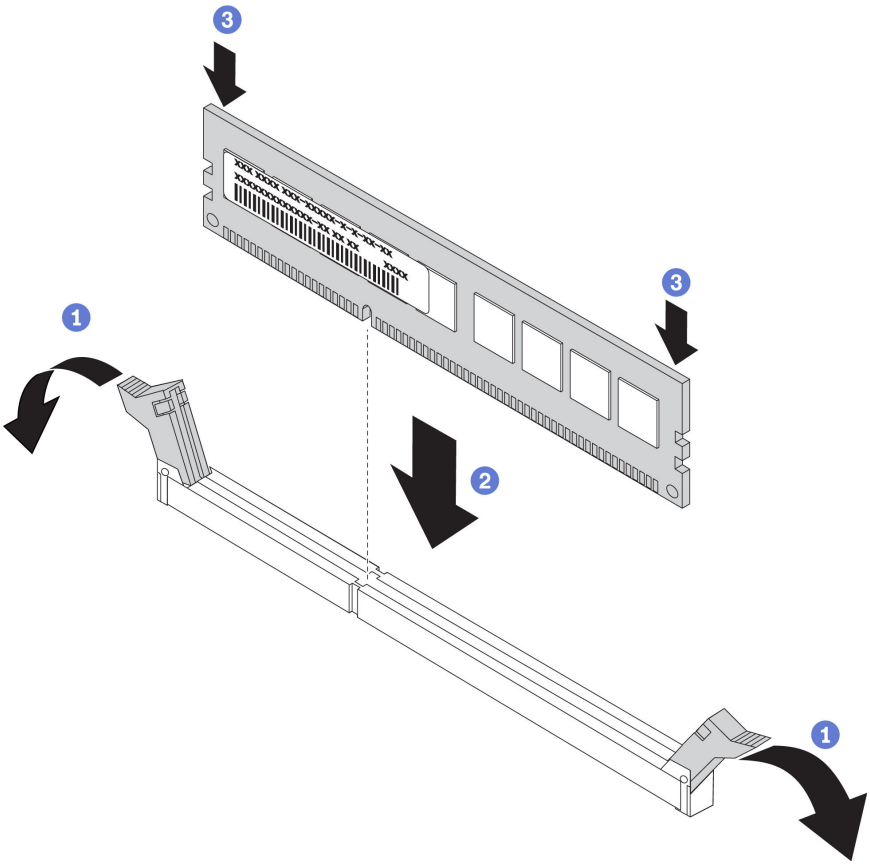

Figure 80. Installing a memory module

1. Gently open the retaining clip on each end of the memory module slot.
2. Align the memory module with the slot, and gently place the memory module on the slot.
3. Firmly press both ends of the memory module straight down until the retaining clips snap into the locked position.

Note: If there is a gap between the memory module and the retaining clips, the memory module has not been correctly inserted. In this case, open the retaining clips, remove the memory module, and then reinsert it.

Demo video

Watch the procedure on YouTube

Install the 7mm drive cage

Follow instructions in this section to install the 7mm drive cage.

About this task

Procedure

Step 1. Make preparations for this task.

a. If necessary, secure the two drive backplanes to the drive cage with three screws.

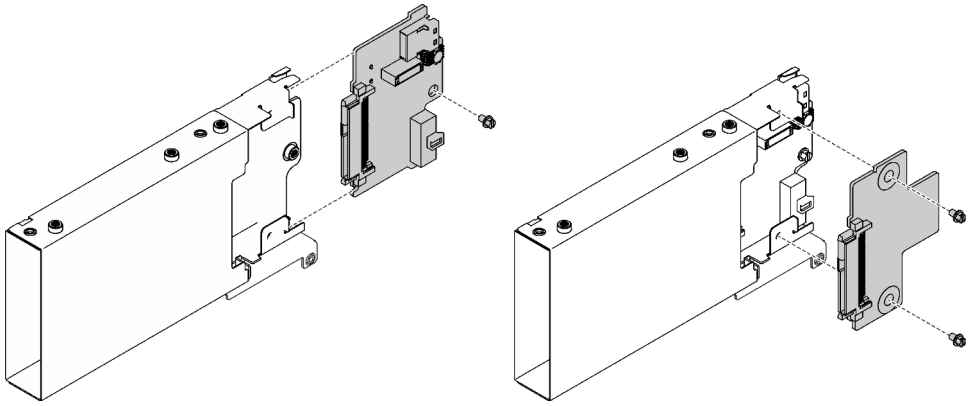

Figure 81. Installing the 7mm drive backplanes

b. Install the 7mm drive cage to the x16/x16 (x8 lanes) PCIe riser with 7mm drive cage bracket.

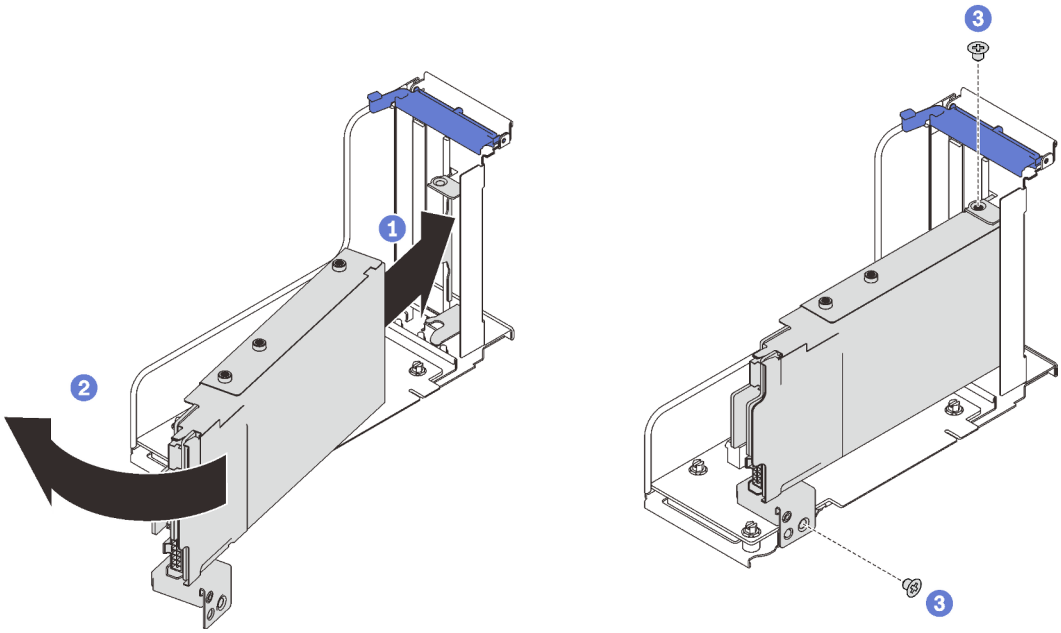

Figure 82. Installing the 7mm drive cage to the riser

1. Align the drive cage with the slot on the riser.
2. Rotate the other end of the cage inwards.
3. Secure the drive cage to the riser with two screws.

Demo video

Watch the procedure on YouTube

Install the processor and memory expansion tray

Follow instructions in this section to install the processor and memory expansion tray.

About this task

Important: To avoid component damage, **DO NOT** remove or install memory modules or PHMs when the tray is removed from the server.

Procedure

Step 1. Make sure the expansion tray air baffle is installed on the system board. If not, install it.

Attention: Air baffle is required for airflow that creates proper cooling. Make sure to install proper air baffles for system configuration before the power is turned on.

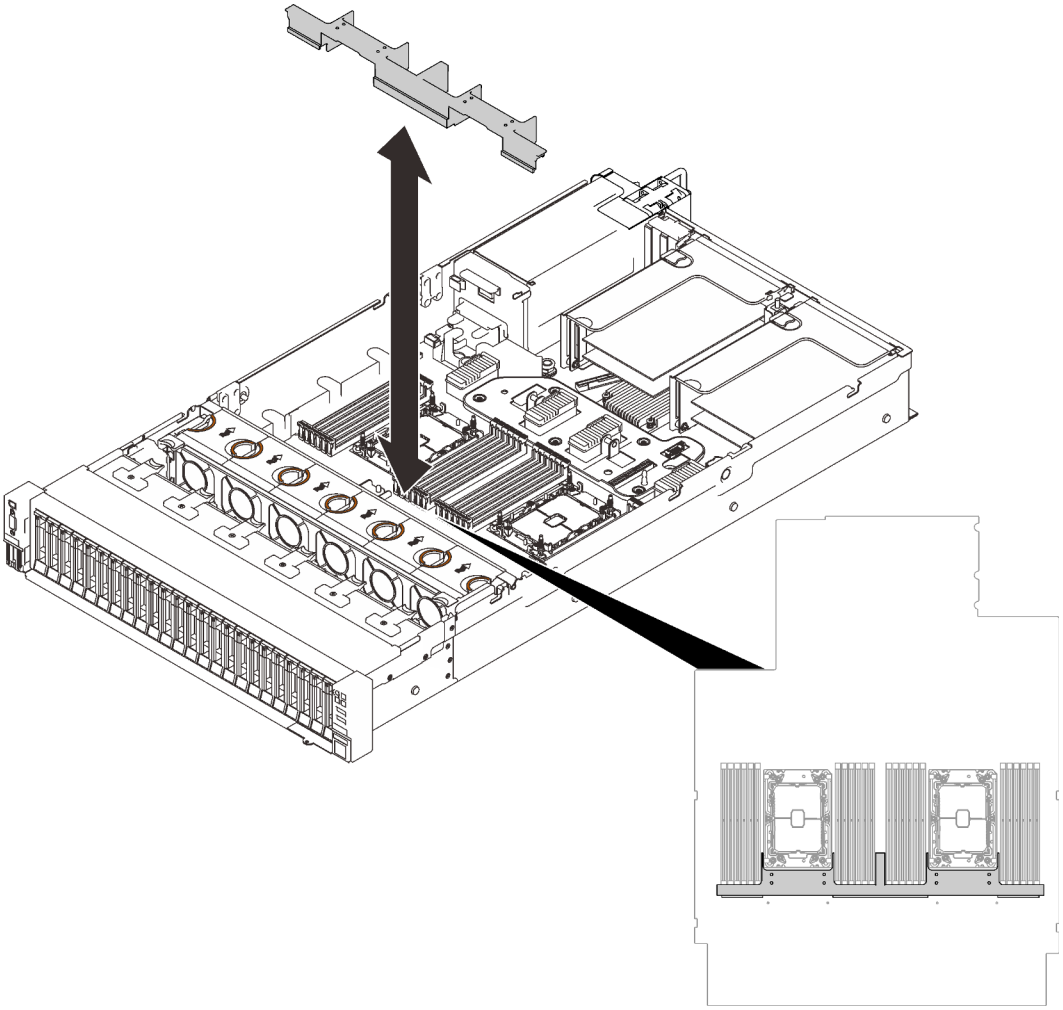

Figure 83. Installing the expansion tray air baffle

Step 2. Align the processor and memory expansion tray with the two pairs of guides on the sides, and lower it into the chassis.

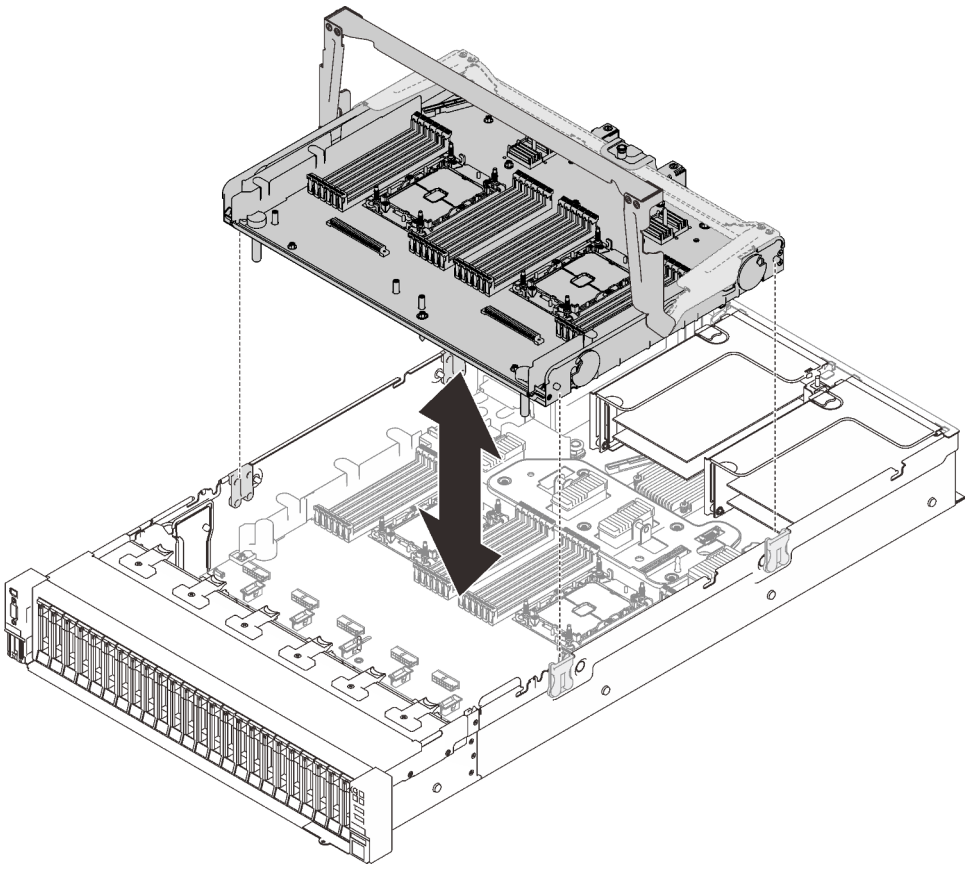

Figure 84. Installing the processor and memory expansion tray

Step 3. If you plan to install memory modules and PHMs, do it now (see "Install a memory module" on page 162 and "Install a processor-heat-sink module" on page 159).

Step 4. If applicable, route the two PCIe cables through the cable guides, and connect them to the expansion tray.

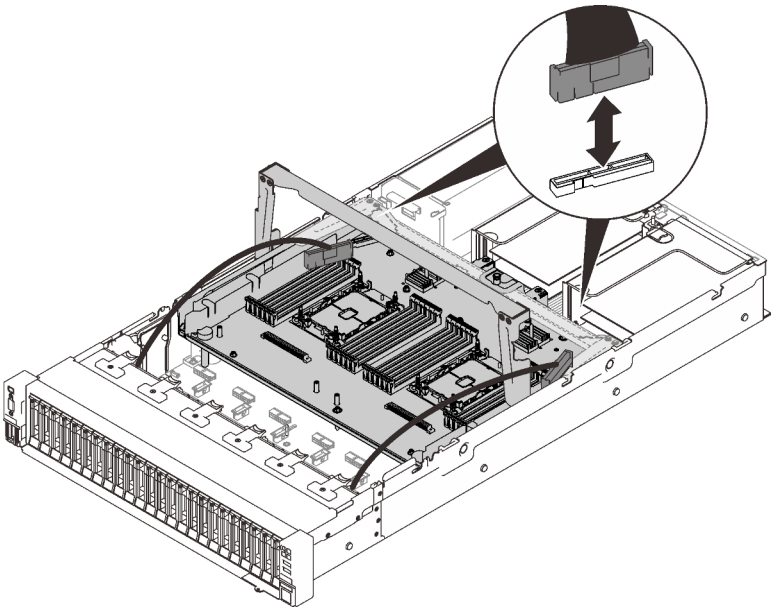

Figure 85. Connecting cables to the expansion tray

Step 5. Secure the processor and memory expansion tray.

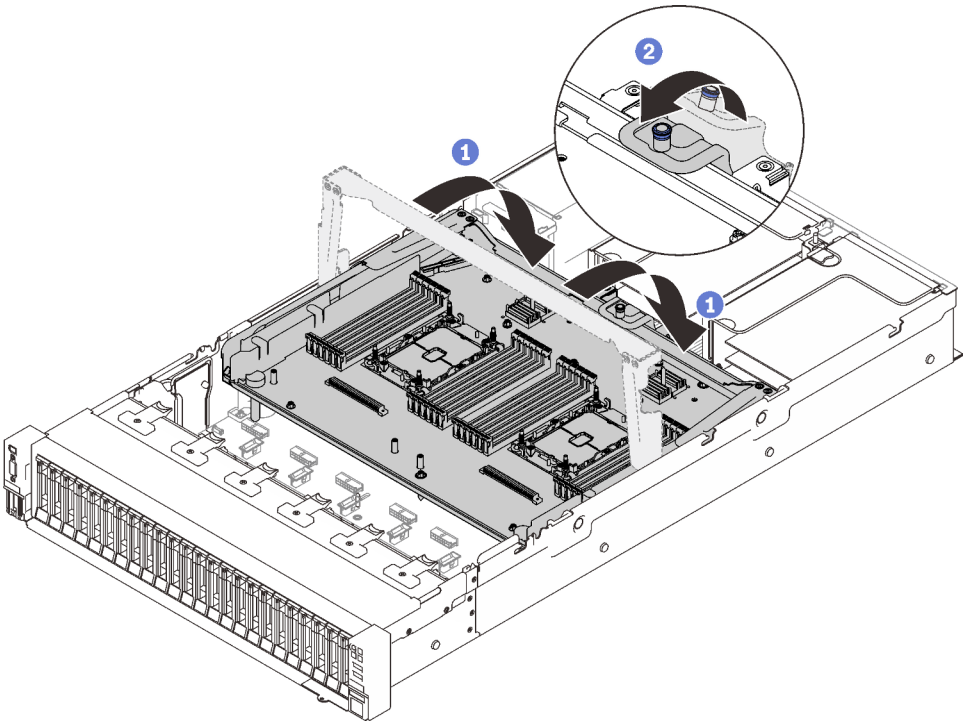

Figure 86. Securing the processor and memory expansion tray

1 Rotate the handle all the way down. This connects and fixes the expansion tray to the system board.

2 Pull the retaining tab back to secure the handle.

Demo video

Watch the procedure on YouTube

Install the fan cage assembly

Follow instructions in this section to install the fan cage assembly.

About this task

S002

CAUTION:
The power-control button on the device and the power switch on the power supply do not turn off the electrical current supplied to the device. The device also might have more than one power cord. To remove all electrical current from the device, ensure that all power cords are disconnected from the power source.

S017

CAUTION:
Hazardous moving fan blades nearby. Keep fingers and other body parts away.

Procedure

Step 1. Align the fan cage assembly to the guides on both sides of the server, and lower it into the server.

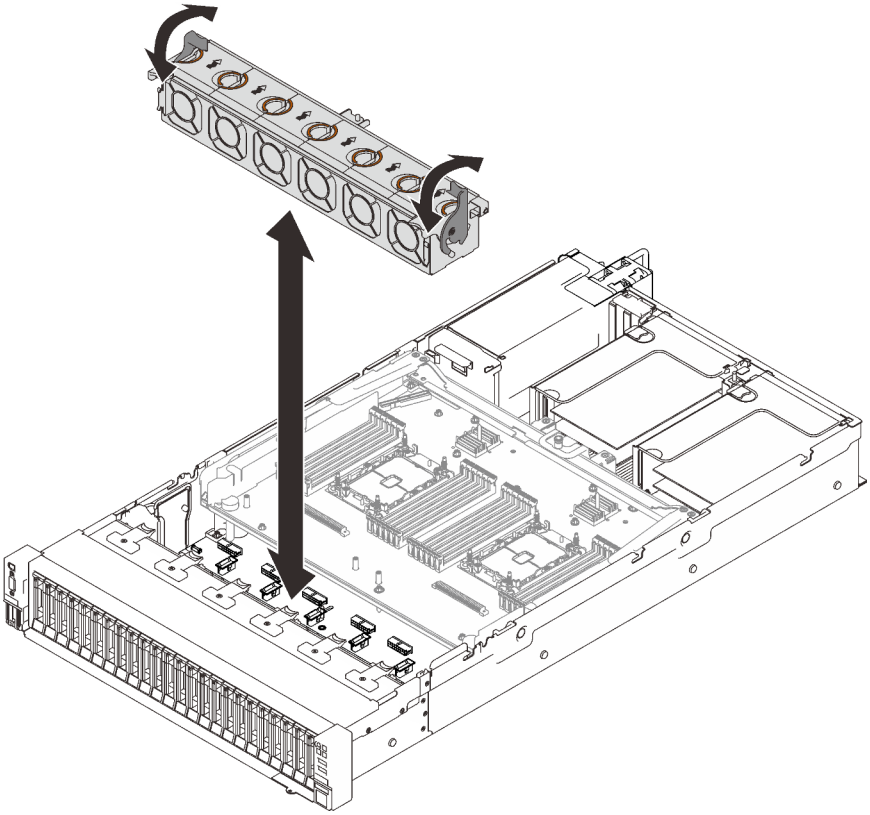

Figure 87. Installing the fan cage assembly

Step 2. Rotate the fan cage release latches down until they stop.

Demo video

Watch the procedure on YouTube

Install the top cover

Follow instructions in this section to install the server top cover.

About this task

S014

CAUTION:
Hazardous voltage, current, and energy levels might be present. Only a qualified service technician is authorized to remove the covers where the label is attached.

S033

CAUTION:
Hazardous energy present. Voltages with hazardous energy might cause heating when shorted with metal, which might result in spattered metal, burns, or both.

Procedure

Step 1. Install the top cover.

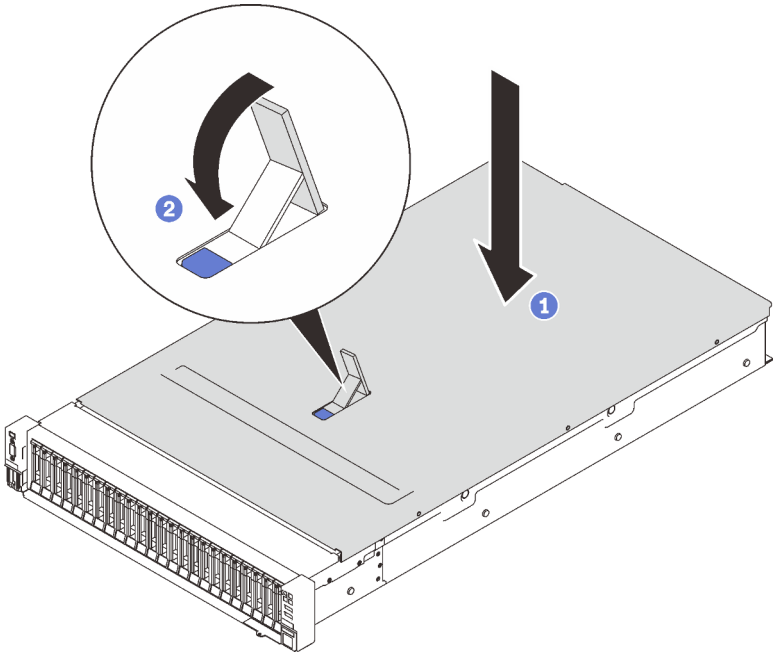

Figure 88. Installing the top cover

1. Place the top cover over top of the server with both sides aligned.
2. Rotate the latch down until it stops.

Step 2. (Optional) Lock the top cover with a screw driver (direction 2).

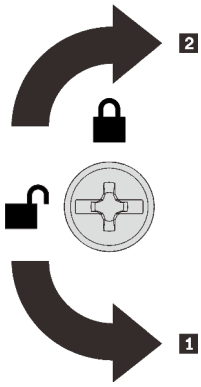

1 Unlocking direction
2 Locking direction

Figure 89. Top cover locking/unlocking direction

Demo video

Watch the procedure on YouTube

Cable the server

Attach all external cables to the server. Typically, you will need to connect the server to a power source, to the data network, and to storage. In addition, you will need to connect the server to the management network.

Connect to power

Connect the server to power.

Connect to the network

Connect the server to the network.

Connect to storage

Connect the server to any storage devices.

Power on the server

After the server performs a short self-test (power status LED flashes quickly) when connected to input power, it enters a standby state (power status LED flashes once per second).

The server can be turned on (power LED on) in any of the following ways:

- You can press the power button.
- The server can restart automatically after a power interruption.
- The server can respond to remote power-on requests sent to the Lenovo XClarity Controller.

For information about powering off the server, see “Power off the server” on page 173.

Validate server setup

After powering up the server, make sure that the LEDs are lit and that they are green.

Power off the server

The server remains in a standby state when it is connected to a power source, allowing the Lenovo XClarity Controller to respond to remote power-on requests. To remove all power from the server (power status LED off), you must disconnect all power cables.

To place the server in a standby state (power status LED flashes once per second):

Note: The Lenovo XClarity Controller can place the server in a standby state as an automatic response to a critical system failure.

- Start an orderly shutdown using the operating system (if supported by your operating system).
- Press the power button to start an orderly shutdown (if supported by your operating system).
- Press and hold the power button for more than 4 seconds to force a shutdown.

When in a standby state, the server can respond to remote power-on requests sent to the Lenovo XClarity Controller. For information about powering on the server, see "Power on the server" on page 172.

Chapter 6. System configuration

Complete these procedures to configure your system.

Set the network connection for the Lenovo XClarity Controller

Before you can access the Lenovo XClarity Controller over your network, you need to specify how Lenovo XClarity Controller will connect to the network. Depending on how the network connection is implemented, you might need to specify a static IP address as well.

The following methods are available to set the network connection for the Lenovo XClarity Controller if you are not using DHCP:

- If a monitor is attached to the server, you can use Lenovo XClarity Provisioning Manager to set the network connection.

  Complete the following steps to connect the Lenovo XClarity Controller to the network using the Lenovo XClarity Provisioning Manager.

  1. Start the server.
  2. Press the key specified in the on-screen instructions to display the Lenovo XClarity Provisioning Manager interface. (For more information, see the “Startup” section in the LXPM documentation compatible with your server at https://pubs.lenovo.com/lxpm-overview/.)
  3. Go to **LXPM → UEFI Setup → BMC Settings** to specify how the Lenovo XClarity Controller will connect to the network.
     - If you choose a static IP connection, make sure that you specify an IPv4 or IPv6 address that is available on the network.
     - If you choose a DHCP connection, make sure that the MAC address for the server has been configured in the DHCP server.
  4. Click **OK** to apply the setting and wait for two to three minutes.
  5. Use an IPv4 or IPv6 address to connect Lenovo XClarity Controller.

     Important: The Lenovo XClarity Controller is set initially with a user name of USERID and password of PASSW0RD (with a zero, not the letter O). This default user setting has Supervisor access. It is required to change this user name and password during your initial configuration for enhanced security.
- If no monitor attached to the server, you can set the network connection through the Lenovo XClarity Controller interface. Connect an Ethernet cable from your laptop to Lenovo XClarity Controller connector, which is located at the rear of the server. For the location of the Lenovo XClarity Controller connector, see “Rear view” on page 25.

  Note: Make sure that you modify the IP settings on the laptop so that it is on the same network as the server default settings.

  The default IPv4 address and the IPv6 Link Local Address (LLA) is provided on the Lenovo XClarity Controller Network Access label that is affixed to the Pull Out Information Tab.
- If you are using the Lenovo XClarity Administrator Mobile app from a mobile device, you can connect to the Lenovo XClarity Controller through the Lenovo XClarity Controller USB connector on the front of the server. For the location of the Lenovo XClarity Controller USB connector, see “Front view” on page 17.

  Note: The Lenovo XClarity Controller USB connector mode must be set to manage the Lenovo XClarity Controller (instead of normal USB mode). To switch from normal mode to Lenovo XClarity Controller

© Copyright Lenovo 2020, 2025

management mode, hold the blue ID button on the front panel for at least 3 seconds until its LED flashes slowly (once every couple of seconds).

To connect using the Lenovo XClarity Administrator Mobile app:

1. Connect the USB cable of your mobile device to the Lenovo XClarity Administrator USB connector on the front panel.
2. On your mobile device, enable USB tethering.
3. On your mobile device, launch the Lenovo XClarity Administrator mobile app.
4. If automatic discovery is disabled, click **Discovery** on the USB Discovery page to connect to the Lenovo XClarity Controller.

For more information about using the Lenovo XClarity Administrator Mobile app, see:

http://sysmgt.lenovofiles.com/help/topic/com.lenovo.lxca.doc/lxca_usemobileapp.html

Set front USB port for Lenovo XClarity Controller connection

Before you can access the Lenovo XClarity Controller through the front USB port, you need to configure the USB port for Lenovo XClarity Controller connection.

Server support

To see if your server supports accessing Lenovo XClarity Controller through the front USB port, check one of the following:

- Refer to Chapter 2 “Server components” on page 15.
- If there is a wrench icon on the USB port of your server, you can set the USB port to connect to Lenovo XClarity Controller.

Setting the USB port for Lenovo XClarity Controller connection

You can switch the USB port between normal and Lenovo XClarity Controller management operation by performing one of the following steps.

- Hold the ID button for at least 3 second until its LED flashes slowly (once every couple of seconds). See Chapter 2 “Server components” on page 15 for ID button location.
- From the Lenovo XClarity Controller management controller CLI, run the `usbfp` command. For information about using the Lenovo XClarity Controller CLI, see the “Command-line interface” section in the XCC documentation compatible with your server at https://pubs.lenovo.com/lxcc-overview/.
- From the Lenovo XClarity Controller management controller web interface, click **BMC Configuration → Network → Front Panel USB Port Manager**. For information about Lenovo XClarity Controller web interface functions, see the “Description of XClarity Controller functions on web interface” section in the XCC documentation compatible with your server at https://pubs.lenovo.com/lxcc-overview/.

Checking USB port current setting

You can also check the current setting of the USB port using the Lenovo XClarity Controller management controller CLI (`usbfp` command) or the Lenovo XClarity Controller management controller web interface (**BMC Configuration → Network → Front Panel USB Port Manager**). See the “Command-line interface” and “Description of XClarity Controller functions on web interface” sections in the XCC documentation compatible with your server at https://pubs.lenovo.com/lxcc-overview/.

Update the firmware

Several options are available to update the firmware for the server.

You can use the tools listed here to update the most current firmware for your server and the devices that are installed in the server.

- Best practices related to updating firmware is available at the following site:
  - http://lenovopress.com/LP0656
- The latest firmware can be found at the following site:
  - http://datacentersupport.lenovo.com/products/servers/thinksystem/sr850v2/downloads
- You can subscribe to product notification to stay up to date on firmware updates:
  - https://datacentersupport.lenovo.com/tw/en/solutions/ht509500

UpdateXpress System Packs (UXSPs)

Lenovo typically releases firmware in bundles called UpdateXpress System Packs (UXSPs). To ensure that all of the firmware updates are compatible, you should update all firmware at the same time. If you are updating firmware for both the Lenovo XClarity Controller and UEFI, update the firmware for Lenovo XClarity Controller first.

Update method terminology

- **In-band update**. The installation or update is performed using a tool or application within an operating system that is executing on the server's core CPU.
- **Out-of-band update**. The installation or update is performed by the Lenovo XClarity Controller collecting the update and then directing the update to the target subsystem or device. Out-of-band updates have no dependency on an operating system executing on the core CPU. However, most out-of-band operations do require the server to be in the S0 (Working) power state.
- **On-Target update.** The installation or update is initiated from an Operating System executing on the server's operating system.
- **Off-Target update.** The installation or update is initiated from a computing device interacting directly with the server's Lenovo XClarity Controller.
- **UpdateXpress System Packs (UXSPs)**. UXSPs are bundled updates designed and tested to provide the interdependent level of functionality, performance, and compatibility. UXSPs are server machine-type specific and are built (with firmware and device driver updates) to support specific Windows Server, Red Hat Enterprise Linux (RHEL) and SUSE Linux Enterprise Server (SLES) operating system distributions. Machine-type-specific firmware-only UXSPs are also available.

Firmware updating tools

See the following table to determine the best Lenovo tool to use for installing and setting up the firmware:

Tool	Update Methods Supported	Core System Firmware Updates	I/O Devices Firmware Updates	Graphical user interface	Command line interface	Supports UXSPs
Lenovo XClarity Provisioning Manager (LXPM)	In-band[2] On-Target	√		√		
Lenovo XClarity Controller (XCC)	Out-of-band Off-Target	√	Selected I/O devices	√		
Lenovo XClarity Essentials OneCLI (OneCLI)	In-band Out-of-band On-Target Off-Target	√	All I/O devices		√	√
Lenovo XClarity Essentials UpdateXpress (LXCE)	In-band Out-of-band On-Target Off-Target	√	All I/O devices	√		√
Lenovo XClarity Essentials Bootable Media Creator (BoMC)	In-band Out-of-band Off-Target	√	All I/O devices	√ (BoMC application)	√ (BoMC application)	√
Lenovo XClarity Administrator (LXCA)	In-band[1] Out-of-band[2] Off-Target	√	All I/O devices	√		√
Lenovo XClarity Integrator (LXCI) for VMware vCenter	Out-of-band Off-Target	√	Selected I/O devices	√		
Lenovo XClarity Integrator (LXCI) for Microsoft Windows Admin Center	In-band Out-of-band On-Target Off-Target	√	All I/O devices	√		√
Lenovo XClarity Integrator (LXCI) for Microsoft System Center Configuration Manager	In-band On-Target	√	All I/O devices	√		√

Notes:

1. For I/O firmware updates.
2. For BMC and UEFI firmware updates.

- **Lenovo XClarity Provisioning Manager**

  From Lenovo XClarity Provisioning Manager, you can update the Lenovo XClarity Controller firmware, the UEFI firmware, and the Lenovo XClarity Provisioning Manager software.

  Note: By default, the Lenovo XClarity Provisioning Manager Graphical User Interface is displayed when you start the server and press the key specified in the on-screen instructions. If you have changed that default to be the text-based system setup, you can bring up the Graphical User Interface from the text-based system setup interface.

  For additional information about using Lenovo XClarity Provisioning Manager to update firmware, see:

  "Firmware Update" section in the LXPM documentation compatible with your server at https://pubs.lenovo.com/lxpm-overview/

- **Lenovo XClarity Controller**

  If you need to install a specific update, you can use the Lenovo XClarity Controller interface for a specific server.

  Notes:

  – To perform an in-band update through Windows or Linux, the operating system driver must be installed and the Ethernet-over-USB (sometimes called LAN over USB) interface must be enabled.

    For additional information about configuring Ethernet over USB, see:

    "Configuring Ethernet over USB" section in the XCC documentation version compatible with your server at https://pubs.lenovo.com/lxcc-overview/

  – If you update firmware through the Lenovo XClarity Controller, make sure that you have downloaded and installed the latest device drivers for the operating system that is running on the server.

  For additional information about using Lenovo XClarity Controller to update firmware, see:

  "Updating Server Firmware" section in the XCC documentation compatible with your server at https://pubs.lenovo.com/lxcc-overview/

- **Lenovo XClarity Essentials OneCLI**

  Lenovo XClarity Essentials OneCLI is a collection of command line applications that can be used to manage Lenovo servers. Its update application can be used to update firmware and device drivers for your servers. The update can be performed within the host operating system of the server (in-band) or remotely through the BMC of the server (out-of-band).

  For additional information about using Lenovo XClarity Essentials OneCLI to update firmware, see:

  https://pubs.lenovo.com/lxce-onecli/onecli_c_update

- **Lenovo XClarity Essentials UpdateXpress**

  Lenovo XClarity Essentials UpdateXpress provides most of OneCLI update functions through a graphical user interface (GUI). It can be used to acquire and deploy UpdateXpress System Pack (UXSP) update packages and individual updates. UpdateXpress System Packs contain firmware and device driver updates for Microsoft Windows and for Linux.

  You can obtain Lenovo XClarity Essentials UpdateXpress from the following location:

  https://datacentersupport.lenovo.com/solutions/lnvo-xpress

- **Lenovo XClarity Essentials Bootable Media Creator**

  You can use Lenovo XClarity Essentials Bootable Media Creator to create bootable media that is suitable for firmware updates, VPD updates, inventory and FFDC collection, advanced system configuration, FoD Keys management, secure erase, RAID configuration, and diagnostics on supported servers.

You can obtain Lenovo XClarity Essentials BoMC from the following location:

https://datacentersupport.lenovo.com/solutions/lnvo-bomc

- **Lenovo XClarity Administrator**

  If you are managing multiple servers using the Lenovo XClarity Administrator, you can update firmware for all managed servers through that interface. Firmware management is simplified by assigning firmware-compliance policies to managed endpoints. When you create and assign a compliance policy to managed endpoints, Lenovo XClarity Administrator monitors changes to the inventory for those endpoints and flags any endpoints that are out of compliance.

  For additional information about using Lenovo XClarity Administrator to update firmware, see:

  http://sysmgt.lenovofiles.com/help/topic/com.lenovo.lxca.doc/update_fw.html

- **Lenovo XClarity Integrator offerings**

  Lenovo XClarity Integrator offerings can integrate management features of Lenovo XClarity Administrator and your server with software used in a certain deployment infrastructure, such as VMware vCenter, Microsoft Admin Center, or Microsoft System Center.

  For additional information about using Lenovo XClarity Integrator to update firmware, see:

  https://pubs.lenovo.com/lxci-overview/

Configure the firmware

Several options are available to install and set up the firmware for the server.

Important: Do not configure option ROMs to be set to **Legacy** unless directed to do so by Lenovo Support. This setting prevents UEFI drivers for the slot devices from loading, which can cause negative side effects for Lenovo software, such as Lenovo XClarity Administrator and Lenovo XClarity Essentials OneCLI, and to the Lenovo XClarity Controller. The side effects include the inability to determine adapter card details, such as model name and firmware levels. When adapter card information is not available, generic information for the model name, such as "Adapter 06:00:00" instead of the actually model name, such as "ThinkSystem RAID 930-16i 4GB Flash." In some cases, the UEFI boot process might also hang.

- **Lenovo XClarity Provisioning Manager**

  From Lenovo XClarity Provisioning Manager, you can configure the UEFI settings for your server.

  Notes: The Lenovo XClarity Provisioning Manager provides a Graphical User Interface to configure a server. The text-based interface to system configuration (the Setup Utility) is also available. From Lenovo XClarity Provisioning Manager, you can choose to restart the server and access the text-based interface. In addition, you can choose to make the text-based interface the default interface that is displayed when you start LXPM. To do this, go to **Lenovo XClarity Provisioning Manager → UEFI Setup → System Settings → <F1>Start Control → Text Setup**. To start the server with Graphic User Interface, select **Auto** or **Tool Suite**.

  See the following documentations for more information:

  - *Lenovo XClarity Provisioning Manager User Guide*
    - Search for the LXPM documentation version compatible with your server at https://pubs.lenovo.com/lxpm-overview/
  - *UEFI User Guide*
    - https://pubs.lenovo.com/uefi-overview/

- **Lenovo XClarity Essentials OneCLI**

You can use the config application and commands to view the current system configuration settings and make changes to Lenovo XClarity Controller and UEFI. The saved configuration information can be used to replicate or restore other systems.

For information about configuring the server using Lenovo XClarity Essentials OneCLI, see:

https://pubs.lenovo.com/lxce-onecli/onecli_c_settings_info_commands

- **Lenovo XClarity Administrator**

  You can quickly provision and pre-provision all of your servers using a consistent configuration. Configuration settings (such as local storage, I/O adapters, boot settings, firmware, ports, and Lenovo XClarity Controller and UEFI settings) are saved as a server pattern that can be applied to one or more managed servers. When the server patterns are updated, the changes are automatically deployed to the applied servers.

  Specific details about updating firmware using Lenovo XClarity Administrator are available at:

  http://sysmgt.lenovofiles.com/help/topic/com.lenovo.lxca.doc/server_configuring.html

- **Lenovo XClarity Controller**

  You can configure the management processor for the server through the Lenovo XClarity Controller Web interface or through the command-line interface.

  For information about configuring the server using Lenovo XClarity Controller, see:

  “Configuring the Server” section in the XCC documentation compatible with your server at https://pubs.lenovo.com/lxcc-overview/

Memory configuration

Memory performance depends on several variables, such as memory mode, memory speed, memory ranks, memory population and processor.

More information about optimizing memory performance and configuring memory is available at the Lenovo Press website:

https://lenovopress.com/servers/options/memory

In addition, you can take advantage of a memory configurator, which is available at the following site:

https://dcsc.lenovo.com/#/memory_configuration

RAID configuration

Using a Redundant Array of Independent Disks (RAID) to store data remains one of the most common and cost-efficient methods to increase server's storage performance, availability, and capacity.

RAID increases performance by allowing multiple drives to process I/O requests simultaneously. RAID can also prevent data loss in case of a drive failure by reconstructing (or rebuilding) the missing data from the failed drive using the data from the remaining drives.

RAID array (also known as RAID drive group) is a group of multiple physical drives that uses a certain common method to distribute data across the drives. A virtual drive (also known as virtual disk or logical drive) is a partition in the drive group that is made up of contiguous data segments on the drives. Virtual drive is presented up to the host operating system as a physical disk that can be partitioned to create OS logical drives or volumes.

An introduction to RAID is available at the following Lenovo Press website:

https://lenovopress.com/lp0578-lenovo-raid-introduction

Detailed information about RAID management tools and resources is available at the following Lenovo Press website:

https://lenovopress.com/lp0579-lenovo-raid-management-tools-and-resources

Notes:

- Before setting up RAID for NVMe drives, follow the below steps to enable VROC:
  1. Restart the system. Before the operating system starts up, press **F1** to enter the Setup Utility.
  2. Go to **System settings → Devices and I/O Ports → Intel VMD** and enable the option.
  3. Save the changes and reboot the system.
- VROC Intel-SSD-Only supports RAID levels 0, 1, 5, and 10 with Intel NVMe drives.
- VROC Premium requires an activation key and supports RAID levels 0, 1, 5, and 10 with non-Intel NVMe drives. For more information about acquiring and installing the activation key, see https://fod.lenovo.com/lkms

Deploy the operating system

Several options are available to deploy an operating system on the server.

Available operating systems

- Microsoft Windows Server
- VMware ESXi
- Red Hat Enterprise Linux
- SUSE Linux Enterprise Server

Complete list of available operating systems: https://lenovopress.lenovo.com/osig.

Tool-based deployment

- **Multi-server**

  Available tools:

  – Lenovo XClarity Administrator

  http://sysmgt.lenovofiles.com/help/topic/com.lenovo.lxca.doc/compute_node_image_deployment.html

  – Lenovo XClarity Essentials OneCLI

  https://pubs.lenovo.com/lxce-onecli/onecli_r_uxspi_proxy_tool

  – Lenovo XClarity Integrator deployment pack for SCCM (for Windows operating system only)

  https://pubs.lenovo.com/lxci-deploypack-sccm/dpsccm_c_endtoend_deploy_scenario

- **Single-server**

  Available tools:

  – Lenovo XClarity Provisioning Manager

  “OS Installation” section in the LXPM documentation compatible with your server at https://pubs.lenovo.com/lxpm-overview/

– Lenovo XClarity Essentials OneCLI

https://pubs.lenovo.com/lxce-onecli/onecli_r_uxspi_proxy_tool

– Lenovo XClarity Integrator deployment pack for SCCM (for Windows operating system only)

https://pubs.lenovo.com/lxci-deploypack-sccm/dpsccm_c_endtoend_deploy_scenario

Manual deployment

If you cannot access the above tools, follow the instructions below, download the corresponding *OS Installation Guide*, and deploy the operating system manually by referring to the guide.

1. Go to https://datacentersupport.lenovo.com/solutions/server-os.
2. Select an operating system from the navigation pane and click **Resources**.
3. Locate the "OS Install Guides" area and click the installation instructions. Then, follow the instructions to complete the operation system deployment task.

Back up the server configuration

After setting up the server or making changes to the configuration, it is a good practice to make a complete backup of the server configuration.

Make sure that you create backups for the following server components:

- **Management processor**

  You can back up the management processor configuration through the Lenovo XClarity Controller interface. For details about backing up the management processor configuration, see:

  "Backing up the BMC configuration" section in the XCC documentation compatible with your server at https://pubs.lenovo.com/lxcc-overview/.

  Alternatively, you can use the `save` command from Lenovo XClarity Essentials OneCLI to create a backup of all configuration settings. For more information about the `save` command, see:

  https://pubs.lenovo.com/lxce-onecli/onecli_r_save_command

- **Operating system**

  Use your backup methods to back up the operating system and user data for the server.

Update the Vital Product Data (VPD)

After initial setup of the system, you can update some Vital Product Data (VPD), such as asset tag and Universal Unique Identifier (UUID).

Update the Universal Unique Identifier (UUID)

Optionally, you can update the Universal Unique Identifier (UUID).

There are two methods available to update the UUID:

- From Lenovo XClarity Provisioning Manager

  To update the UUID from Lenovo XClarity Provisioning Manager:

  1. Start the server and press the key according to the on-screen instructions. (For more information, see the "Startup" section in the LXPM documentation compatible with your server at https://pubs.lenovo.com/lxpm-overview/.) The Lenovo XClarity Provisioning Manager interface is displayed by default.

2. If the power-on Administrator password is required, enter the password.
3. From the System Summary page, click **Update VPD**.
4. Update the UUID.

- From Lenovo XClarity Essentials OneCLI

  Lenovo XClarity Essentials OneCLI sets the UUID in the Lenovo XClarity Controller. Select one of the following methods to access the Lenovo XClarity Controller and set the UUID:

  – Operate from the target system, such as LAN or keyboard console style (KCS) access
  – Remote access to the target system (TCP/IP based)

  To update the UUID from Lenovo XClarity Essentials OneCLI:

  1. Download and install Lenovo XClarity Essentials OneCLI.

     To download Lenovo XClarity Essentials OneCLI, go to the following site:

     https://datacentersupport.lenovo.com/solutions/HT116433
  2. Copy and unpack the OneCLI package, which also includes other required files, to the server. Make sure that you unpack the OneCLI and the required files to the same directory.
  3. After you have Lenovo XClarity Essentials OneCLI in place, type the following command to set the UUID: `onecli config createuuid SYSTEM_PROD_DATA.SysInfoUUID [access_method]`

     Where:

     [access_method]
     The access method that you select to use from the following methods:

     – Online authenticated LAN access, type the command:
       `[--bmc-username <xcc_user_id> --bmc-password <xcc_password>]`

       Where:

       xcc_user_id
       The BMC/IMM/XCC account name (1 of 12 accounts). The default value is USERID.

       xcc_password
       The BMC/IMM/XCC account password (1 of 12 accounts).

       Example command is as follows:
       `onecli config createuuid SYSTEM_PROD_DATA.SysInfoUUID --bmc-username <xcc_user_id> --bmc-password <xcc_password>`
     – Online KCS access (unauthenticated and user restricted):

       You do not need to specify a value for *access_method* when you use this access method.

       Example command is as follows:
       `onecli config createuuid SYSTEM_PROD_DATA.SysInfoUUID`

       Note: The KCS access method uses the IPMI/KCS interface, which requires that the IPMI driver be installed.
     – Remote LAN access, type the command:
       `[--bmc <xcc_user_id>:<xcc_password>@<xcc_external_ip>]`

       Where:

       xcc_external_ip

The BMC/IMM/XCC external IP address. There is no default value. This parameter is required.

xcc_user_id
The BMC/IMM/XCC account name (1 of 12 accounts). The default value is USERID.

xcc_password
The BMC/IMM/XCC account password (1 of 12 accounts).

Note: BMC, IMM, or XCC external IP address, account name, and password are all valid for this command.

Example command is as follows:
```
onecli config createuuid SYSTEM_PROD_DATA.SysInfoUUID --bmc <xcc_user_id>:<xcc_password>@<xcc_external_ip>
```

4. Restart the Lenovo XClarity Controller.
5. Restart the server.

Update the asset tag

Optionally, you can update the asset tag.

There are two methods available to update the asset tag:

- From Lenovo XClarity Provisioning Manager

  To update the asset tag from Lenovo XClarity Provisioning Manager:

  1. Start the server and press the key specified in the on-screen instructions to display the Lenovo XClarity Provisioning Manager interface.
  2. If the power-on Administrator password is required, enter the password.
  3. From the System Summary page, click **Update VPD**.
  4. Update the asset tag information.

- From Lenovo XClarity Essentials OneCLI

  Lenovo XClarity Essentials OneCLI sets the asset tag in the Lenovo XClarity Controller. Select one of the following methods to access the Lenovo XClarity Controller and set the asset tag:

  – Operate from the target system, such as LAN or keyboard console style (KCS) access
  – Remote access to the target system (TCP/IP based)

  To update the asset tag from Lenovo XClarity Essentials OneCLI:

  1. Download and install Lenovo XClarity Essentials OneCLI.

     To download Lenovo XClarity Essentials OneCLI, go to the following site:

     https://datacentersupport.lenovo.com/solutions/HT116433
  2. Copy and unpack the OneCLI package, which also includes other required files, to the server. Make sure that you unpack the OneCLI and the required files to the same directory.
  3. After you have Lenovo XClarity Essentials OneCLI in place, type the following command to set the DMI:
     ```
     onecli config set SYSTEM_PROD_DATA.SysEncloseAssetTag <asset_tag> [access_method]
     ```

     Where:

     <asset_tag>
     The server asset tag number. Type `aaaaaaaaaaaaaaaaaaaaaaaaaaaaaaaa`, where *aaaaaaaaaaaaaaaaaaaaaaaaaaaaaaaa* is the asset tag number.

[access_method]

The access method that you select to use from the following methods:

- Online authenticated LAN access, type the command:
  `[--bmc-username <xcc_user_id> --bmc-password <xcc_password>]`

  Where:

  xcc_user_id
  The BMC/IMM/XCC account name (1 of 12 accounts). The default value is USERID.

  xcc_password
  The BMC/IMM/XCC account password (1 of 12 accounts).

  Example command is as follows:

  ```
  onecli config set SYSTEM_PROD_DATA.SysEncloseAssetTag <asset_tag> --bmc-username <xcc_user_id>
  --bmc-password <xcc_password>
  ```

- Online KCS access (unauthenticated and user restricted):

  You do not need to specify a value for *access_method* when you use this access method.

  Example command is as follows:

  ```
  onecli config set SYSTEM_PROD_DATA.SysEncloseAssetTag <asset_tag>
  ```

  Note: The KCS access method uses the IPMI/KCS interface, which requires that the IPMI driver be installed.

- Remote LAN access, type the command:
  `[--bmc <xcc_user_id>:<xcc_password>@<xcc_external_ip>]`

  Where:

  xcc_external_ip
  The BMC/IMM/XCC IP address. There is no default value. This parameter is required.

  xcc_user_id
  The BMC/IMM/XCC account (1 of 12 accounts). The default value is USERID.

  xcc_password
  The BMC/IMM/XCC account password (1 of 12 accounts).

  Note: BMC, IMM, or XCC internal LAN/USB IP address, account name, and password are all valid for this command.

  Example command is as follows:

  ```
  onecli config set SYSTEM_PROD_DATA.SysEncloseAssetTag <asset_tag> --bmc <xcc_user_id>:<xcc_
  password>@<xcc_external_ip>
  ```

4. Reset the Lenovo XClarity Controller to the factory defaults. See “Resetting the BMC to Factory Default” section in the XCC documentation compatible with your server at https://pubs.lenovo.com/lxcc-overview/.

Chapter 7. Resolving installation issues

Use the information in this section to diagnose and resolve problems that you might encounter during the initial installation and setup of your server.

- "Server does not power on" on page 187
- "The server immediately displays the POST Event Viewer when it is turned on" on page 188
- "Embedded hypervisor is not in the boot list" on page 188
- "Server cannot recognize a hard drive" on page 188
- "Displayed system memory is less than installed physical memory" on page 189
- "A Lenovo optional device that was just installed does not work." on page 191
- "Voltage planar fault is displayed in the event log" on page 191

Server does not power on

Complete the following steps until the problem is resolved:

Note: The power-control button will not function until approximately 5 to 10 seconds after the server has been connected to power.

1. Make sure that the power-control button is working correctly:
   a. Disconnect the server power cords.
   b. Reconnect the power cords.
   c. (Trained technician only) Reseat the operator information panel cable, and then repeat steps 1a and 1b.
      - (Trained technician only) If the server starts, reseat the operator information panel. If the problem remains, replace the operator information panel.
      - If the server does not start, bypass the power-control button by using the force power-on jumper. If the server starts, reseat the operator information panel. If the problem remains, replace the operator information panel.
2. Make sure that the reset button is working correctly:
   a. Disconnect the server power cords.
   b. Reconnect the power cords.
   c. (Trained technician only) Reseat the operator information panel cable, and then repeat steps 2a and 2b.
      - (Trained technician only) If the server starts, replace the operator information panel.
      - If the server does not start, go to step 3.
3. Make sure that both power supplies installed in the server are of the same type. Mixing different power supplies in the server will cause a system error (the system-error LED on the front panel turns on).
4. Make sure that:
   - The power cords are correctly connected to the server and to a working electrical outlet.
   - The type of memory that is installed is correct.
   - The DIMMs are fully seated.
   - The LEDs on the power supply do not indicate a problem.
   - The processors are installed in the correct sequence.
5. Reseat the following components:
   a. Operator information panel connector

© Copyright Lenovo 2020, 2025

   b. Power supplies
6. Replace the following components. restarting the server each time:
   a. Operator information panel connector
   b. Power supplies
7. If you just installed an optional device, remove it, and restart the server. If the server now starts, you might have installed more devices than the power supply supports.
8. See “Power supply LEDs” in *ThinkSystem SR850 V2 Maintenance Manual*.

The server immediately displays the POST Event Viewer when it is turned on

Complete the following steps until the problem is solved.

1. Correct any errors that are indicated by the light path diagnostics LEDs.
2. Make sure that the server supports all the processors and that the processors match in speed and cache size.

   You can view processor details from system setup.

   To determine if the processor is supported for the server, see https://serverproven.lenovo.com/.
3. (Trained technician only) Make sure that processor 1 is seated correctly
4. (Trained technician only) Remove processor 2 and restart the server.
5. Replace the following components one at a time, in the order shown, restarting the server each time:
   a. (Trained technician only) Processor
   b. (Trained technician only) System board

Embedded hypervisor is not in the boot list

Complete the following steps until the problem is resolved:

1. Make sure that the optional embedded hypervisor flash device is selected on the boot manager `<F12> Select Boot Device` at startup.
2. Make sure that the embedded hypervisor flash device is seated in the connector correctly.
3. See the documentation that comes with the optional embedded hypervisor flash device to validate that the device is configured correctly.
4. Make sure that other software works on the server.

Server cannot recognize a hard drive

Complete the following steps until the problem is solved.

1. Observe the associated yellow hard disk drive status LED. If the LED is lit, it indicates a drive fault.
2. If the status LED is lit, remove the drive from the bay, wait 45 seconds, and reinsert the drive, making sure that the drive assembly connects to the hard disk drive backplane.
3. Observe the associated green hard disk drive activity LED and the yellow status LED and perform corresponding operations in different situations:
   - If the green activity LED is flashing and the yellow status LED is not lit, the drive is recognized by the controller and is working correctly. Run the diagnostics tests for the hard disk drives. When you start a server and press the key according to the on-screen instructions, the LXPM is displayed by default. (For more information, see the “Startup” section in the LXPM documentation compatible with your server at https://pubs.lenovo.com/lxpm-overview/.)You can perform hard drive diagnostics from this interface. From the Diagnostic page, click **Run Diagnostic → HDD test/Disk Drive Test**.*
   - If the green activity LED is flashing and the yellow status LED is flashing slowly, the drive is recognized by the controller and is rebuilding.

- If neither LED is lit or flashing, check whether the hard disk drive backplane is correctly seated. For details, go to step 4.
- If the green activity LED is flashing and the yellow status LED is lit, replace the drive. If the activity of the LEDs remains the same, go to step Hard disk drive problems. If the activity of the LEDs changes, return to step 1.

4. Make sure that the hard disk drive backplane is correctly seated. When it is correctly seated, the drive assemblies correctly connect to the backplane without bowing or causing movement of the backplane.
5. Reseat the backplane power cable and repeat steps 1 through 3.
6. Reseat the backplane signal cable and repeat steps 1 through 3.
7. Suspect the backplane signal cable or the backplane:
   - Replace the affected backplane signal cable.
   - Replace the affected backplane.
8. Run the diagnostics tests for the hard disk drives. When you start a server and press the key according to the on-screen instructions, the LXPM is displayed by default. (For more information, see the "Startup" section in the LXPM documentation compatible with your server at https://pubs.lenovo.com/lxpm-overview/.) You can perform hard drive diagnostics from this interface. From the Diagnostic page, click **Run Diagnostic → HDD test/Disk Drive Test**.*

   Based on those tests:
   - If the backplane passes the test but the drives are not recognized, replace the backplane signal cable and run the tests again.
   - Replace the backplane.
   - If the adapter fails the test, disconnect the backplane signal cable from the adapter and run the tests again.
   - If the adapter fails the test, replace the adapter.

Displayed system memory is less than installed physical memory

Complete the following procedure to solve the problem.

Note: Each time you install or remove a memory module, you must disconnect the server from the power source; then, wait 10 seconds before restarting the server.

1. Make sure that:
   - No error LEDs are lit on the operator information panel.
   - No memory module error LEDs are lit on the system board.
   - Memory mirrored channel does not account for the discrepancy.
   - The memory modules are seated correctly.
   - You have installed the correct type of memory module (see "PMEM rules" on page 126 for requirements).
   - After changing or replacing a memory module, memory configuration is updated accordingly in the Setup Utility.
   - All banks of memory are enabled. The server might have automatically disabled a memory bank when it detected a problem, or a memory bank might have been manually disabled.
   - There is no memory mismatch when the server is at the minimum memory configuration.
   - When PMEMs are installed:
     a. If the memory is set in App Direct Mode, all the saved data have been backed up, and created namespaces are deleted before any PMEM is replaced or added.

b. Refer to "PMEM rules" on page 126 and see if the displayed memory fits the mode description.

c. If PMEMs are recently set in Memory Mode, turn it back to App Direct Mode and examine if there is namespace that has not been deleted.

d. Go to the Setup Utility, select **System Configuration and Boot Management → Intel Optane PMEMs → Security**, and make sure security of all the PMEM units is disabled.

2. Reseat the memory modules, and then restart the server.
3. Check the POST error log:
   - If a memory module was disabled by a systems-management interrupt (SMI), replace the memory module.
   - If a memory module was disabled by the user or by POST, reseat the memory module; then, run the Setup utility and enable the memory module.
4. Run memory diagnostics. When you start a solution and press F1, the LXPM interface is displayed by default. You can perform memory diagnostics with this interface. From the Diagnostic page, go to **Run Diagnostic → Memory test** or **PMEM test**.

   Notes: When PMEMs are installed, run diagnostics based on the mode that is set presently:

   - App Direct Mode:
     - Run Memory Test for DRAM memory modules.
     - Run PMEM Test for PMEMs.
   - Memory Mode:

     Run both Memory Test and PMEM Test for PMEMs.
5. Reverse the modules between the channels (of the same processor), and then restart the server. If the problem is related to a memory module, replace the failing memory module.

   Note: When PMEMs are installed, only adopt this method in Memory Mode.
6. Re-enable all memory modules using the Setup utility, and then restart the server.
7. (Trained technician only) Install the failing memory module into a memory module connector for processor 2 (if installed) to verify that the problem is not the processor or the memory module connector.
8. (Trained technician only) Replace the system board.

Migrated PMEMs are not supported

Intel Optane PMEM interleave set (DIMM X) is migrated from another system (Platform ID: 0x00), these migrated PMEMs are not supported nor warranted in this system.

If this warning message appears, complete the following steps:

1. Move the modules back to the original system with the exact same configuration as the previous one.
2. Back up stored data in PMEM namespaces.
3. Disable PMEM security with one of the following options:
   - **LXPM**

     Go to **UEFI Setup → System Settings → Intel Optane PMEMs → Security → Press to Disable Security**, and input passphrase to disable security.
   - **Setup Utility**

     Go to **System Configuration and Boot Management → System Settings → Intel Optane PMEMs → Security → Press to Disable Security**, and input passphrase to disable security.

4. Delete namespaces with command corresponding to the operating system that is installed:
   - **Linux** command:
     ```
     ndctl destroy-namespace all -f
     ndctl destroy-namespace all -f
     ```
   - **Windows** Powershell command
     ```
     Get-PmemDisk | Remove-PmemDisk
     ```
5. Clear Platform Configuration Data (PCD) and Namespace Label Storage Area (LSA) with the following ipmctl command (for both Linux and Windows).
   ```
   ipmctl delete -pcd
   ```

   Notes: See the following links to learn how to download and use impctl in different operating systems:
   - Windows: https://datacentersupport.lenovo.com/us/en/videos/YTV101407
   - Linux: https://datacentersupport.lenovo.com/us/en/solutions/HT508642
6. Reboot the system, and press F1 to enter Setup Utility.
7. Power off the system.
8. Remove the modules to be reused for a new system or configuration.

A Lenovo optional device that was just installed does not work.

1. Make sure that:
   - The device is supported for the server (see https://serverproven.lenovo.com/).
   - You followed the installation instructions that came with the device and the device is installed correctly.
   - You have not loosened any other installed devices or cables.
   - You updated the configuration information in system setup. When you start a server and press the key according to the on-screen instructions to display the Setup Utility. (For more information, see the "Startup" section in the LXPM documentation compatible with your server at https://pubs.lenovo.com/lxpm-overview/.) Whenever memory or any other device is changed, you must update the configuration.
2. Reseat the device that you have just installed.
3. Replace the device that you have just installed.
4. Reseat the cable connection and check there is no physical damage to the cable.
5. If there is any cable damages, then replace the cable.

Voltage planar fault is displayed in the event log

Complete the following steps until the problem is solved.

1. Revert the system to the minimum configuration. See "Specifications" on page 4 for the minimally required number of processors and DIMMs.
2. Restart the system.
   - If the system restarts, add each of the removed items one at a time and restart the system each time until the error occurs. Replace the item for which the error occurs.
   - If the system does not restart, suspect the system board.

Appendix A. Getting help and technical assistance

If you need help, service, or technical assistance or just want more information about Lenovo products, you will find a wide variety of sources available from Lenovo to assist you.

On the World Wide Web, up-to-date information about Lenovo systems, optional devices, services, and support are available at:

http://datacentersupport.lenovo.com

Note: This section includes references to IBM web sites and information about obtaining service. IBM is Lenovo's preferred service provider for ThinkSystem.

Before you call

Before you call, there are several steps that you can take to try and solve the problem yourself. If you decide that you do need to call for assistance, gather the information that will be needed by the service technician to more quickly resolve your problem.

Attempt to resolve the problem yourself

You can solve many problems without outside assistance by following the troubleshooting procedures that Lenovo provides in the online help or in the Lenovo product documentation. The Lenovo product documentation also describes the diagnostic tests that you can perform. The documentation for most systems, operating systems, and programs contains troubleshooting procedures and explanations of error messages and error codes. If you suspect a software problem, see the documentation for the operating system or program.

You can find the product documentation for your ThinkSystem products at the following location:

http://thinksystem.lenovofiles.com/help/index.jsp

You can take these steps to try to solve the problem yourself:

- Check all cables to make sure that they are connected.
- Check the power switches to make sure that the system and any optional devices are turned on.
- Check for updated software, firmware, and operating-system device drivers for your Lenovo product. The Lenovo Warranty terms and conditions state that you, the owner of the Lenovo product, are responsible for maintaining and updating all software and firmware for the product (unless it is covered by an additional maintenance contract). Your service technician will request that you upgrade your software and firmware if the problem has a documented solution within a software upgrade.
- If you have installed new hardware or software in your environment, check https://serverproven.lenovo.com/ to make sure that the hardware and software is supported by your product.
- Go to http://datacentersupport.lenovo.com and check for information to help you solve the problem.
  - Check the Lenovo forums at https://forums.lenovo.com/t5/Datacenter-Systems/ct-p/sv_eg to see if someone else has encountered a similar problem.

Gathering information needed to call Support

If you believe that you require warranty service for your Lenovo product, the service technicians will be able to assist you more efficiently if you prepare before you call. You can also see http://datacentersupport.lenovo.com/warrantylookup for more information about your product warranty.

© Copyright Lenovo 2020, 2025

Gather the following information to provide to the service technician. This data will help the service technician quickly provide a solution to your problem and ensure that you receive the level of service for which you might have contracted.

- Hardware and Software Maintenance agreement contract numbers, if applicable
- Machine type number (Lenovo 4-digit machine identifier)
- Model number
- Serial number
- Current system UEFI and firmware levels
- Other pertinent information such as error messages and logs

As an alternative to calling Lenovo Support, you can go to https://support.lenovo.com/servicerequest to submit an Electronic Service Request. Submitting an Electronic Service Request will start the process of determining a solution to your problem by making the pertinent information available to the service technicians. The Lenovo service technicians can start working on your solution as soon as you have completed and submitted an Electronic Service Request.

Collecting service data

To clearly identify the root cause of a server issue or at the request of Lenovo Support, you might need collect service data that can be used for further analysis. Service data includes information such as event logs and hardware inventory.

Service data can be collected through the following tools:

- **Lenovo XClarity Provisioning Manager**

  Use the Collect Service Data function of Lenovo XClarity Provisioning Manager to collect system service data. You can collect existing system log data or run a new diagnostic to collect new data.

- **Lenovo XClarity Controller**

  You can use the Lenovo XClarity Controller web interface or the CLI to collect service data for the server. The file can be saved and sent to Lenovo Support.

  - For more information about using the web interface to collect service data, see the “Downloading service data” section in the XCC documentation version compatible with your server at https://pubs.lenovo.com/lxcc-overview/.
  - For more information about using the CLI to collect service data, see the “ffdc command” section in the XCC documentation version compatible with your server at https://pubs.lenovo.com/lxcc-overview/.

- **Lenovo XClarity Administrator**

  Lenovo XClarity Administrator can be set up to collect and send diagnostic files automatically to Lenovo Support when certain serviceable events occur in Lenovo XClarity Administrator and the managed endpoints. You can choose to send diagnostic files to Lenovo Support using Call Home or to another service provider using SFTP. You can also manually collect diagnostic files, open a problem record, and send diagnostic files to the Lenovo Support Center.

  You can find more information about setting up automatic problem notification within the Lenovo XClarity Administrator at http://sysmgt.lenovofiles.com/help/topic/com.lenovo.lxca.doc/admin_setupcallhome.html.

- **Lenovo XClarity Essentials OneCLI**

  Lenovo XClarity Essentials OneCLI has inventory application to collect service data. It can run both in-band and out-of-band. When running in-band within the host operating system on the server, OneCLI can collect information about the operating system, such as the operating system event log, in addition to the hardware service data.

To obtain service data, you can run the `getinfor` command. For more information about running the `getinfor`, see https://pubs.lenovo.com/lxce-onecli/onecli_r_getinfor_command.

Contacting Support

You can contact Support to obtain help for your issue.

You can receive hardware service through a Lenovo Authorized Service Provider. To locate a service provider authorized by Lenovo to provide warranty service, go to https://datacentersupport.lenovo.com/serviceprovider and use filter searching for different countries. For Lenovo support telephone numbers, see https://datacentersupport.lenovo.com/supportphonelist for your region support details.

Index

B

back up the server configuration 183
backplane
  AnyBay 107
  NVMe 107
  SAS 106
  SATA 106
board internal connectors 29, 33, 35

C

cable 107–109
cable routing
  drive 43, 46, 48, 62, 68–69, 77, 86, 92, 98
cable the server 172
cables
  connecting and routing to the server 43
collecting service data 194
Common installation issues 187
Configuration - ThinkSystem SR850 V2 175
configure the firmware 180
connecting cables
  to the server 43
connectors 29, 33, 35
  PCIe riser 111–113
connectors, internal system board 30
connectors, processor and memory expansion tray 32
creating a personalized support web page 193
custom support web page 193

D

devices, static-sensitive
  handling 120
diagnostics panel
  LCD 19
drive 107, 109
  cable routing 43, 46, 48, 62, 68–69, 77, 86, 92, 98
drive backplane 33

E

External
  LCD diagnostics handset 19

F

features 2
Flash power module kit 108
front view
  LED location 17
front view of the server 17

G

Getting help 193
guidelines
  options installation 118
  system reliability 120

H

handling static-sensitive devices 120
hardware options
  hot-swap 131
  installing 131, 139
  server 139
hardware service and support telephone numbers 195
help 193

I

installation
  guidelines 118
installation guidelines 118
internal, PCIe riser card connectors 35
internal, power backplane connectors 33
internal, processor and memory expansion tray 32
internal, system board connectors 29–30
introduction 1
intrusion switch 109

L

LCD
  diagnostics panel 19
LCD diagnostics handset
  External 19
Lenovo Capacity Planner 10
Lenovo XClarity Essentials 10
Lenovo XClarity Provisioning Manager 10

M

management offerings 10
memory configuration 181
memory expansion tray 114

O

option 109

P

parts list 38
PCIe riser
  connectors 111–113
power cords 42
power off the server 173
power on the server 172
Processor and memory expansion tray connector 32

R

routing the server cables 43

S

safety iii

© Copyright Lenovo 2020, 2025

safety inspection checklist iv, 119
server, front view 17
service and support
before you call 193
hardware 195
software 195
service data 194
software service and support telephone numbers 195
static-sensitive devices
handling 120
support web page, custom 193
system board internal connectors 30
System configuration - ThinkSystem SR850 V2 175
system reliability guidelines 120

T

telephone numbers 195

U

update the firmware 177
updating
Update the Vital Product Data (VPD) 183

V

validate server setup 172

W

working inside the server
power on 120

Lenovo