ThinkSystem ST550
Setup Guide

Machine Types: 7X09 and 7X10

Note

Before using this information and the product it supports, be sure to read and understand the safety information and the safety instructions, which are available at:
https://pubs.lenovo.com/safety_documentation/

In addition, be sure that you are familiar with the terms and conditions of the Lenovo warranty for your server, which can be found at:
http://datacentersupport.lenovo.com/warrantylookup

Fourteenth Edition (January 2025)

© Copyright Lenovo 2017, 2025.

LIMITED AND RESTRICTED RIGHTS NOTICE: If data or software is delivered pursuant to a General Services Administration (GSA) contract, use, reproduction, or disclosure is subject to restrictions set forth in Contract No. GS-35F-05925.

Contents

Contents i

Chapter 1. Introduction 1

Server package contents 2
Server form factor 3
Features. 4
Specifications 5
Particulate contamination 13
Management options. 14

Chapter 2. Server components 19

Front view 19
Front panel 22
Rear view 25
Rear view LEDs 28
System board components 30
Internal cable routing. 31
Optical drive 33
Tape drive 34
Power interface board 36
Graphics adapter 37
Server models with eight 3.5-inch simple-swap drives 38
Hot-swap-drive backplane. 38
Parts list. 59
Power cords 63

Chapter 3. Server hardware setup . . 65

Server setup checklist 65
Installation Guidelines 66
Safety inspection checklist. 67
System reliability guidelines 68
Working inside the server with the power on . . 68
Handling static-sensitive devices 68
Install server hardware options 69
Remove the server cover 69
Remove the air baffle 70
Remove the PCIe adapter retainer 71
Remove the PCIe adapter holder 72
Install a processor-heat-sink module. 74
Install a DIMM 78
Install an optical drive or a tape drive. 83
Install the expansion drive cage. 87
Install a simple-swap-drive backplate 88
Install a backplane 89
Install a PCIe adapter 91
Install the serial port module 92
Install the M.2 backplane and M.2 drive. . . . 93
Install the hot-swap power supply cage. . . . 97
Install the power interface board 98
Install a hot-swap power supply 99
Install a front fan. 103
Install the rear fan 104
Install the PCIe adapter holder 106
Install the PCIe adapter retainer. 107
Install the air baffle 108
Install the RAID super capacitor module . . . 109
Install the server cover 110
Install the foot stands. 112
Install a simple-swap drive. 112
Install a hot-swap drive 114
Cable the server 116
Power on the server 116
Validate server setup. 117
Power off the server 117

Chapter 4. System configuration . . .119

Set the network connection for the Lenovo XClarity Controller 119
Update the firmware 120
Configure the firmware 123
Memory configuration 124
RAID configuration 124
Deploy the operating system. 125
Back up the server configuration 125
Update the Vital Product Data (VPD). 126
Update the Universal Unique Identifier (UUID). 126
Update the asset tag 127

Chapter 5. Resolving installation issues 131

Appendix A. Getting help and technical assistance 135

Before you call 135
Collecting service data 136
Contacting Support 137

Appendix B. Trademarks 139

Index 141

© Copyright Lenovo 2017, 2025

Chapter 1. Introduction

The ThinkSystem™ ST550 server is a 4U tower server designed for performance and expansion for various IT workloads. With the modular design, the server is flexible to be customized for maximum storage capacity or high storage density with selectable input/output options and tiered system management.

Performance, ease of use, reliability, and expansion capabilities were key considerations in the design of the server. These design features make it possible for you to customize the system hardware to meet your needs today and provide flexible expansion capabilities for the future.

The server comes with a limited warranty. For details about the warranty, see:
https://support.lenovo.com/us/en/solutions/ht503310

For details about your specific warranty, see:
http://datacentersupport.lenovo.com/warrantylookup

Identifying your server

When you contact Lenovo for help, the machine type and serial number information helps support technicians to identify your server and provide faster service.

The machine type and serial number are on the ID label on the front of the server.

The following illustration shows the location of the ID label.

Note: The illustrations in this document might differ slightly from your server.

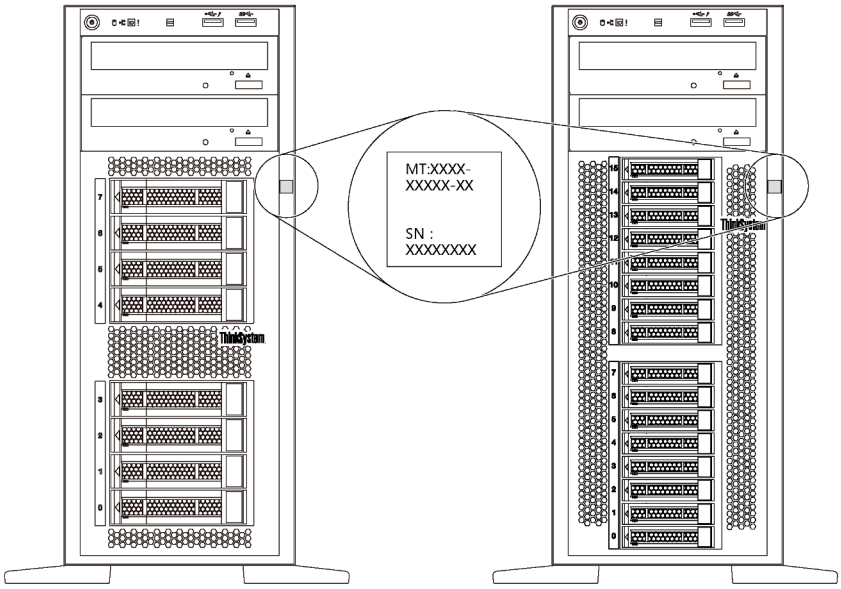

Figure 1. Location of the ID label

XClarity Controller network access label

The XClarity® Controller network access label is attached on the front bezel as shown. After you get the server, peel the XClarity Controller network access label away and store it in a safe place for future use.

© Copyright Lenovo 2017, 2025

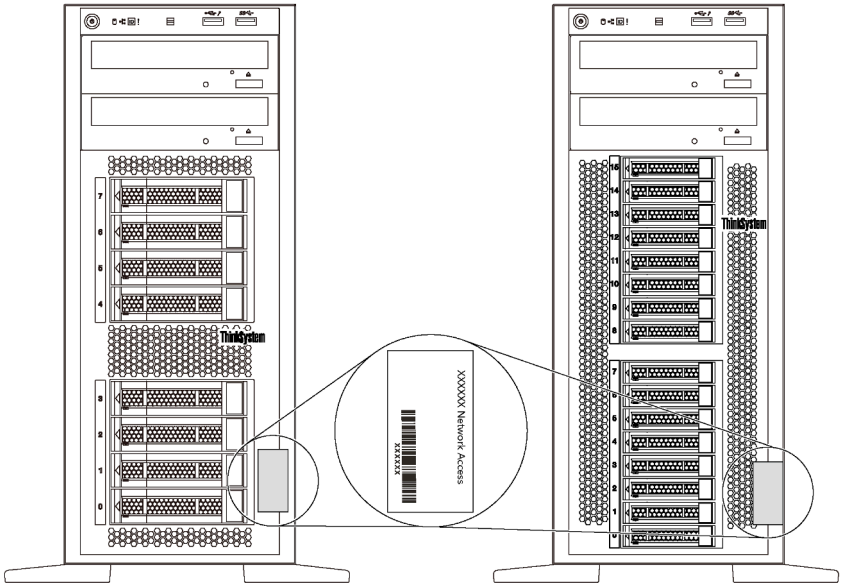

Figure 2. Location of the XClarity Controller network access label

Quick response code

The system service label, which is on the inside of the server cover, provides a quick response (QR) code for mobile access to service information. Scan the QR code with a mobile device and a QR code reader application to get quick access to the Lenovo Service web site for this server. The Lenovo Service web site provides additional information for parts installation and replacement videos, and error codes for server support.

The following illustration shows the QR code: https://support.lenovo.com/p/servers/st550

Figure 3. QR code

Server package contents

When you receive your server, verify that the shipment contains everything that you expected to receive.

The server package includes the following items:

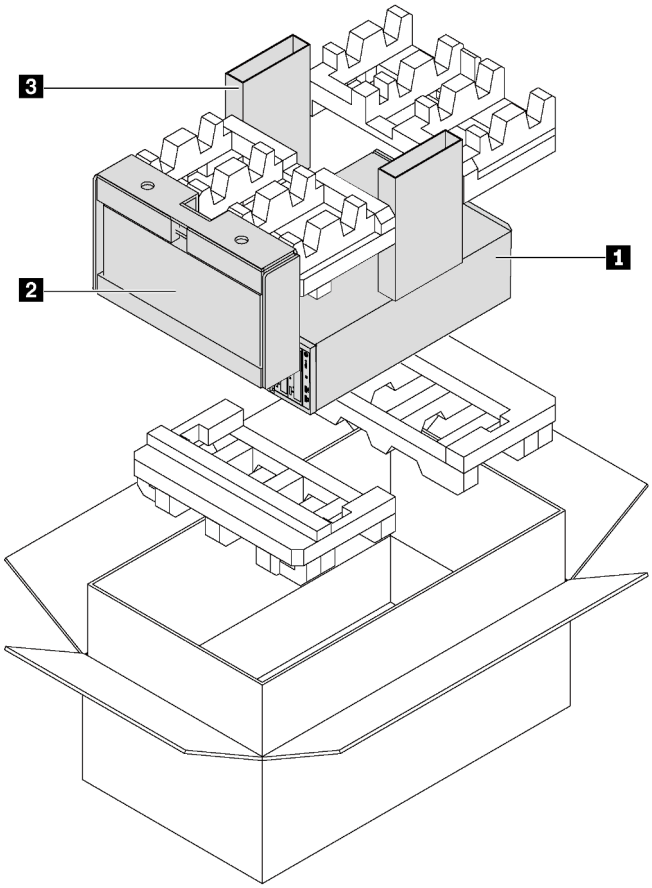

Note: Items marked with asterisk (*) are available on some models only.

1. Server
2. Keyboard and front door*
3. Material box, including items such as accessory kit, power cords* and documentation

Server form factor

The ThinkSystem ST550 server is designed to support both tower and rack form factors.

You can change the server from tower form factor to rack form factor by installing the tower-to-rack conversion kit. For instructions on how to install the tower-to-rack conversion kit, refer to the documentation that comes with the conversion kit.

Features

Performance, ease of use, reliability, and expansion capabilities were key considerations in the design of the server. These design features make it possible for you to customize the system hardware to meet your needs today and provide flexible expansion capabilities for the future.

Your server implements the following features and technologies:

- **Lenovo XClarity Controller (XCC)**

  The Lenovo XClarity Controller is the common management controller for Lenovo Lenovo ThinkSystem server hardware. The Lenovo XClarity Controller consolidates multiple management functions in a single chip on the server system board.

  Some of the features that are unique to the Lenovo XClarity Controller are enhanced performance, higher-resolution remote video, and expanded security options. For additional information about the Lenovo XClarity Controller, see:

  https://pubs.lenovo.com/xcc/

- **UEFI-compliant server firmware**

  Lenovo ThinkSystem firmware is Unified Extensible Firmware Interface (UEFI) 2.5 compliant. UEFI replaces BIOS and defines a standard interface between the operating system, platform firmware, and external devices.

  Lenovo ThinkSystem servers are capable of booting UEFI-compliant operating systems, BIOS-based operating systems, and BIOS-based adapters as well as UEFI-compliant adapters.

- **Large system-memory capacity**

  The server supports registered DIMMs (RDIMMs) and load-reduced DIMMs (LRDIMMs). For more information about the specific types and maximum amount of memory, see "Specifications" on page 5.

- **Integrated Trusted Platform Module (TPM)**

  This integrated security chip performs cryptographic functions and stores private and public secure keys. It provides the hardware support for the Trusted Computing Group (TCG) specification. You can download the software to support the TCG specification.

  Trusted Platform Module (TPM) has two versions - TPM 1.2 and TPM 2.0. You can change the TPM version from 1.2 to 2.0 and back again.

  For more information on TPM configurations, see "Enable TPM/TCM" in the *Maintenance Manual*.

  Note: For customers in Chinese Mainland, integrated TPM is not supported. However, customers in Chinese Mainland can install a Trusted Cryptographic Module (TCM) adapter or a Lenovo-qualified TPM adapter (sometimes called a daughter card).

- **Large data-storage capacity and hot-swap capability**

  Some server models support a maximum of twenty 2.5-inch hot-swap drives or a maximum of eight 3.5-inch hot-swap drives. For some models, you can install up to eight 3.5-inch hot-swap drives and four 2.5-inch hot-swap drives into the same server.

  Some server models support a maximum of eight 3.5-inch simple-swap drives.

  For server models supporting the hot-swap feature, you can add, remove, or replace drives without turning off the server.

- **Mobile access to Lenovo Service Information website**

The server provides a QR code on the system service label, which is on the inside of the server cover, that you can scan the QR code with a mobile device and a QR code reader application to get quick access to the Lenovo Service web site for this server. The Lenovo Service Information web site provides additional information for parts installation and replacement videos, and error codes for server support.

- **Redundant networking connection**

  The Lenovo XClarity Controller provides failover capability to a redundant Ethernet connection with the applicable application installed. If a problem occurs with the primary Ethernet connection, all Ethernet traffic that is associated with the primary connection is automatically switched to the optional redundant Ethernet connection. If the applicable device drivers are installed, this switching occurs without data loss and without user intervention.

- **Redundant cooling and power capabilities**

  The server supports up to four non-hot-swap fans and the fan 4 is the redundant fan. The redundant cooling by the fan enables continued operation if one of the fans fails.

  Some server models support one fixed power supply and some server models support a maximum of two hot-swap power supplies.

Specifications

The following information is a summary of the features and specifications of the server. Depending on the model, some features might not be available, or some specifications might not apply.

Dimensions for tower form factor

- **a** Height:
  - With foot stands: 437.7 mm (17.3 inches)
  - Without foot stands: 425.5 mm (16.8 inches)
- **b** Depth: 666.4 mm (26.3 inches)
- **c** Width:
  - With foot stands: 272.0 mm (10.7 inches)
  - Without foot stands: 175.8 mm (7.0 inches)

Note: The depth is measured with power supplies installed, but without the front door installed.

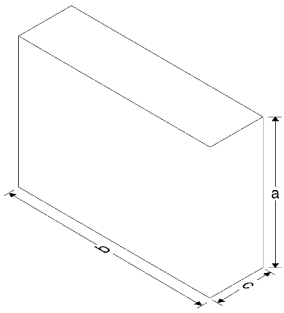

Dimensions for rack form factor

- **a** Width:
  - With rack latches: 482.0 mm (19.0 inches)
  - Without rack latches: 427.7 mm (16.9 inches)
- **b** Depth: 670.2 mm (26.4 inches)
- **c** Height: 175.8 mm (7.0 inches)

Note: The depth is measured with rack latches and power supplies installed.

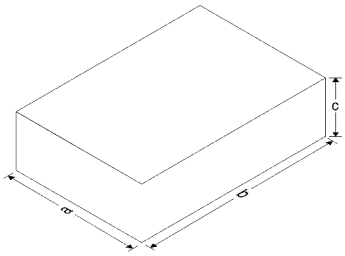

Weight

Up to 36.9 kg (79.4 lb), depending on the server configuration

Processor

- Up to two Intel® Xeon® scalable processors
  - Scalable up to 22 cores
  - Designed for Land Grid Array (LGA) 3647 socket
- Up to two Jintide® processors for Chinese Mainland only

Note: For Jintide processors, only C08101, C10201, C12301, C14501, and C16401 models are supported for Chinese Mainland.

For a list of supported processors, see:
https://serverproven.lenovo.com/

Memory

For 1st Generation Intel Xeon Scalable Processors (Intel Xeon SP Gen 1) or Jintide processors

- Minimum: 8 GB
- Maximum:
  - 384 GB using registered DIMMs (RDIMMs)
  - 768 GB using load-reduced DIMMs (LRDIMMs)
- Type:
  - TruDDR4 2666, single-rank/dual-rank, 8 GB/16 GB/32 GB registered DIMMs (RDIMMs)
  - TruDDR4 2666, quad-rank, 64 GB load-reduced DIMMs (LRDIMMs)
- Slots: 12 DIMM slots

For 2nd Generation Intel Xeon Scalable Processors (Intel Xeon SP Gen 2)

- Minimum: 8 GB
- Maximum: 768 GB
- Type:
  - TruDDR4 2666, single-rank/dual-rank, 16 GB/32 GB registered DIMMs (RDIMMs)
  - TruDDR4 2933, single-rank/dual-rank, 8 GB/16 GB/32 GB/64 GB registered DIMMs (RDIMMs)
- Slots: 12 DIMM slots

Note: The actual operating speed depends on the processor model and UEFI Operating Mode selection. For a list of supported DIMMs, see:
https://serverproven.lenovo.com/

Supported operating systems

Below lists all supported and certified operating systems:

- Microsoft Windows Server
- VMware ESXi
- Red Hat Enterprise Linux
- SUSE Linux Enterprise Server

For a complete list of operating systems, see:

https://lenovopress.lenovo.com/osig

For OS deployment instructions, see: “Deploy the operating system” on page 125.

Supported drives

The drives supported by your server vary by model.

- Storage drive

Drive bay	Supported drive type
Eight 2.5-inch drive bays	Hot-swap SAS/SATA/NVMe HDD or SSD (NVMe drives are supported only in bays 4–7 if an AnyBay backplane is installed)
Sixteen 2.5-inch drive bays	Hot-swap SAS/SATA/NVMe HDD or SSD (NVMe drives are supported only in bays 4–7 if an AnyBay backplane is installed)
Twenty 2.5-inch drive bays	Hot-swap SAS/SATA/NVMe HDD or SSD (NVMe drives are supported only in bays 4–7 if an AnyBay backplane is installed)
Four 3.5-inch drive bays	– Simple-swap SATA HDD – Hot-swap SAS/SATA HDD or SSD
Eight 3.5-inch drive bays	– Simple-swap SATA HDD – Hot-swap SAS/SATA HDD or SSD
Eight 3.5-inch drive bays and four 2.5-inch drive bays	Hot-swap SAS/SATA HDD or SSD

  To locate the storage drives or drive bays, see "Front view" on page 19.

- Optical drive

  Some server models have two optical drive bays. For more information, see "Front view" on page 19.

- Tape drive

  A tape drive enables you to store data on tape media. For server models with two optical drive bays, you can install an internal tape drive in the optical-drive bay 2.

- M.2 drive

  Your server supports one M.2 backplane which provides an easy way for data storage. You can install up to two M.2 drives into the M.2 backplane. For more information, see "Install the M.2 backplane and M.2 drive" on page 93.

Expansion slots

The server has six expansion slots on the system board for installing appropriate Peripheral Component Interconnect Express (PCIe) adapters.

- For processor 1
  - PCIe slot 1: PCIe x8 (x8, x4, x1), full-height, half-length
  - PCIe slot 2: PCIe x16 (x16, x8, x4, x1), full-height, half-length
  - PCIe slot 3: PCIe x16 (x16, x8, x4, x1), full-height, full-length, double-width
  - PCIe slot 6: PCIe x8 (x4, x1), full-height, full-length
- For processor 2
  - PCIe slot 4: PCIe x16 (x8, x4, x1), full-height, full-length
  - PCIe slot 5: PCIe x16 (x16, x8, x4, x1), full-height, full-length, double-width

The following HBA/RAID adapters can be installed in an appropriate PCIe slot.

- SAS/SATA HBA adapters
  - ThinkSystem 430-8i SAS/SATA 12Gb HBA
  - ThinkSystem 430-16i SAS/SATA 12Gb HBA
  - ThinkSystem 430-8e SAS/SATA 12Gb HBA

  - ThinkSystem 440-8i SAS/SATA PCIe Gen4 12Gb HBA
  - ThinkSystem 440-16i SAS/SATA PCIe Gen4 12Gb HBA
  - ThinkSystem 4350-8i SAS/SATA 12Gb HBA
- SAS/SATA RAID adapters
  - ThinkSystem RAID 530-8i PCIe 12Gb Adapter
  - ThinkSystem RAID 540-8i PCIe 12Gb Adapter
  - ThinkSystem RAID 730-8i 1GB Adapter
  - ThinkSystem RAID 730-8i 2GB PCIe Adapter
  - ThinkSystem RAID 930-8e 4GB Flash PCIe 12Gb Adapter
  - ThinkSystem RAID 930-8i 2GB Flash PCIe 12Gb Adapter
  - ThinkSystem RAID 930-16i 4GB Flash PCIe 12Gb Adapter
  - ThinkSystem RAID 930-16i 8GB Flash PCIe 12Gb Adapter
  - ThinkSystem RAID 930-24i 4GB Flash PCIe 12Gb Adapter
  - ThinkSystem RAID 940-8i 4GB Flash PCIe Gen4 12Gb Adapter
  - ThinkSystem RAID 940-8e 4GB Flash PCIe 12Gb Adapter
  - ThinkSystem RAID 940-16i 4GB Flash PCIe Gen4 12Gb Adapter
  - ThinkSystem RAID 940-16i 8GB Flash PCIe Gen4 12Gb Adapter
  - ThinkSystem RAID 940-32i 8GB Flash PCIe Gen4 12Gb Adapter
  - ThinkSystem RAID 5350-8i PCIe 12Gb Adapter
  - ThinkSystem RAID 9350-8i 2GB Flash PCIe 12Gb Adapter

Notes:

- RAID 730–8i 1G Cache SAS/SATA adapter is not available for North America.
- RAID 530–8i SAS/SATA adapter cannot be mixed with RAID 730–8i 1G Cache SAS/SATA adapter.
- RAID 730–8i 2G Flash SAS/SATA adapter cannot be mixed with RAID 730-8i 1G Cache SAS/SATA adapter or RAID 930–8i SAS/SATA adapter.
- The RAID 940 adapters can be mixed with the ThinkSystem 440-8i SAS/SATA PCIe Gen4 12Gb HBA and the ThinkSystem 440-16i SAS/SATA PCIe Gen4 12Gb HBA.
- Mixing of RAID/HBA 430/530/730/930 adapters (Gen 3) and RAID/HBA 440/540/940 adapters (Gen 4) in the same system is not allowed.
- RAID 930/940 series or 9350 series adapters require a RAID flash power module.
- RAID 4350/5350/9350 series adapters cannot be mixed with HBA/RAID 430/440/530/540/730/930/940 series SAS/SATA adapters.
- For server models that support NVMe drives, the NVMe adapter (also known as the NVMe switch adapter) can be installed only in PCIe slot 2.
- For RAID adapters or host bus adapters, you can install them in either PCIe slot 1 or PCIe slot 2.
- For server models with one processor, you can install a double-width graphics adapter only in PCIe slot 3. For server models with two processors, you can install up to two double-width graphics adapters in PCIe slot 3 and PCIe slot 5. After any double-width graphics adapter is installed, PCIe slot 4 or PCIe slot 6 becomes unavailable because the space is occupied by the double-width adapter.

Graphics adapters

- Your server supports the following GPUs:
  - Full-height, full-length, double-slot GPUs: NVIDIA P6000

  - Full-height, full-length, single-slot GPU: NVIDIA P4000, NVIDIA RTX4000.
  - Full-height, 3/4-length, single-slot GPU: NVIDIA P2000, NVIDIA P2200.
  - Low-profile, half-height, half-length, single-slot GPUs: NVIDIA P600, NVIDIA P620
- Thermal Design Power (TDP): up to 250 watts

Notes:

- NVIDIA P4000 and NVIDIA RTX4000 are supported only in the new chassis. See "Differences between the original chassis and new chassis" on page 9
- Your server supports up to two graphics adapters installed.
- Graphics adapter is supported only when the following configuration requirements are met:
  - Fan 4 is installed.
  - Two 1100-watt power supplies are installed.
  - For NVIDIA P6000 graphics adapter, operating temperature is lower than 35°C (95°F) when one P6000 is installed, and operating temperature is lower than 30°C (86°F) when two are installed. For other supported graphics adapters, operating temperature is lower than 35°C (95°F) when one or two graphic adapters are installed.
- Fan redundancy function is supported when:
  - One NVIDIA P600, P620, P2000, P2200, P4000, or RTX4000 graphics adapter is installed
  - Two NVIDIA P600 or P620 graphics adapters are installed

Differences between the original chassis and new chassis

Two types of chassis are available for your server, and different chassis type supports different GPU models. You can identify the chassis type of your server by the rear view of your server or the part number label affixed on the bottom of your server.

Chassis type	Rear view	Part number	Supported GPU model
Original chassis	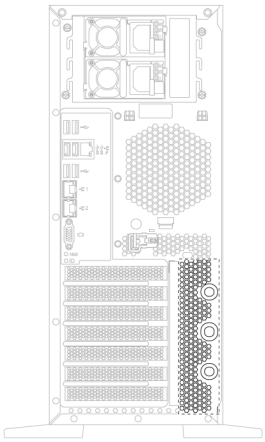	• SC87A02105 (eight 3.5-inch-drive-bay chassis) • SC87A02106 (sixteen 2.5-inch-drive-bay chassis)	• NVIDIA P2000 • NVIDIA P2200 • NVIDIA P6000 • NVIDIA P600 • NVIDIA P620
New chassis	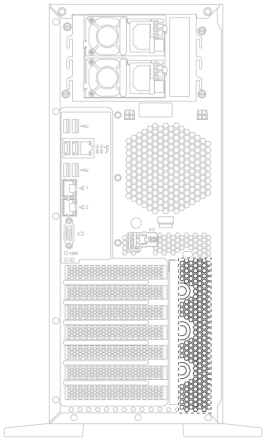	• SC87A19892 (eight 3.5-inch-drive-bay chassis) • SC87A19894 (sixteen 2.5-inch-drive-bay chassis)	• NVIDIA P2000 • NVIDIA P2200 • NVIDIA P4000, NVIDIA RTX4000 and other NVIDIA form factor V3.0 GPUs • NVIDIA P6000 • NVIDIA P600 • NVIDIA P620

Notes:

- The new chassis is the updated version of the original chassis to support NVIDIA form factor V3.0 GPUs, such as NVIDIA P4000 and NVIDIA RTX4000.
- The original chassis will phase out and be replaced by the new chassis.

Input/Output (I/O) features

- Front panel:
  - One XClarity Controller USB connector
  - One USB 3.0 connector
- Rear panel:
  - One VGA connector
  - One XClarity Controller network connector
  - Two Ethernet connectors
  - Two USB 3.0 connectors
  - Four USB 2.0 connectors

System fans

- One processor: two fans (fan 1 and 2) or three fans (fan 1, 2, and 4)
- Two processors: three fans (fan 1, 2, and 3) or four fans (fan 1, 2, 3, and 4)

Notes:

- Fan 3 is required if the expansion drive cage is installed.
- Fan 4 is optional and is the redundant fan.
- If your server comes with only one processor, two or three system fans are adequate to provide proper cooling. However, you must keep the location for fan 3 occupied by a fan filler to ensure proper airflow.

Power supplies

- One fixed 450-watt power supply
- One or two hot-swap power supplies for redundancy support
  - 550-watt ac 80 PLUS Platinum
  - 750-watt ac 80 PLUS Platinum
  - 750-watt ac 80 PLUS Titanium
  - 1100-watt ac 80 PLUS Platinum

Electrical input

- ac input (50 Hz to 60 Hz) required
  - Input voltage low range:
    - Minimum: 100 V ac
    - Maximum: 127 V ac
  - Input voltage high range:
    - Minimum: 200 V ac
    - Maximum: 240 V ac

Note: For server models with 750-watt ac 80 PLUS Titanium power supplies, the 100 V –127 V ac input voltage is not supported.

CAUTION:
240 V dc input (input range: 180-300 V dc) is supported in Chinese Mainland ONLY. Power supply with 240 V dc input cannot support hot plugging power cord function. Before removing the power supply with dc input, please turn off server or disconnect dc power sources at the breaker panel or by turning off the power source. Then, remove the power cord.

Minimal configuration for debugging

- One processor in processor socket 1
- One memory DIMM on slot 3
- One power supply
- Two system fans (fan 1 and 2)

Acoustical noise

- Sound power levels, idle
  - 4.0 bels, minimum
  - 4.7 bels, typical
  - 5.3 bels, maximum

- Sound power levels, operating
  - 4.1 bels, minimum
  - 4.7 bels, typical
  - 5.3 bels, maximum

Notes:

- These sound power levels are measured in controlled acoustical environments according to procedures specified by ISO 7779 and are reported in accordance with ISO 9296.
- The declared acoustic noise levels are based on specified configurations, which may change depending on configurations/conditions.

Environment

The server is supported in the following environment:

Note: This server is designed for standard data center environment and recommended to be placed in industrial data center.

- Air temperature:
  - Operating:
    - ASHRAE class A2: 10–35°C (50–95°F); when the altitude exceeds 900 m (2953 ft), the maximum ambient temperature value decreases by 1°C (1.8°F) with every 300 m (984 ft) of altitude increase.
    - ASHRAE class A3: 5–40°C (41–104°F); when the altitude exceeds 900 m (2953 ft), the maximum ambient temperature value decreases by 1°C (1.8°F) with every 175 m (574 ft) of altitude increase.
    - ASHRAE class A4: 5–45°C (41–113°F); when the altitude exceeds 900 m (2953 ft), the maximum ambient temperature value decreases by 1°C (1.8°F) with every 125 m (410 ft) of altitude increase.
  - Server off: 5–45°C (41–113°F)
  - Shipping or storage: -40–60°C (-40–140°F)
- Maximum altitude: 3050 m (10 000 ft)
- Relative humidity (non-condensing):
  - Operating:
    - ASHRAE class A2: 8%–80%; maximum dew point: 21°C (70°F)
    - ASHRAE class A3: 8%–85%; maximum dew point: 24°C (75°F)
    - ASHRAE class A4: 8%–90%; maximum dew point: 24°C (75°F)
  - Shipping or storage: 8%–90%
- Particulate contamination

  Attention: Airborne particulates and reactive gases acting alone or in combination with other environmental factors such as humidity or temperature might pose a risk to the server.

Note: Your server complies with ASHRAE class A2 specifications. The server performance might be impacted when the operating temperature is outside the ASHRAE A2 specifications. Depending on the hardware configuration, some server models comply with ASHRAE class A3 and class A4 specifications. To comply with ASHRAE class A3 and class A4 specifications, the server models must meet the following hardware configuration requirements at the same time:

- Fan 4 is installed.
- Two hot-swap power supplies are installed.
- NVMe SSD is not installed.

- Graphics adapters are not installed.
- SAS drives with capacity larger than or equal to 2 TB are not installed in the expansion drive cage.
- Processors with TDP more than 125 watts are not installed.

Important information about EU ecodesign requirements

The following are EU ecodesign requirements for ErP Lot 9 products:

- Minimum memory should be 16 GB.
- Delta or Acbel 450-watt power supplies should not be picked.
- Processors should not picked for one-processor configurations: Intel Xeon 3104, 3106, 3204, 4108, 4112, 5122, 5222, 8156, and 8256

Particulate contamination

Attention: Airborne particulates (including metal flakes or particles) and reactive gases acting alone or in combination with other environmental factors such as humidity or temperature might pose a risk to the device that is described in this document.

Risks that are posed by the presence of excessive particulate levels or concentrations of harmful gases include damage that might cause the device to malfunction or cease functioning altogether. This specification sets forth limits for particulates and gases that are intended to avoid such damage. The limits must not be viewed or used as definitive limits, because numerous other factors, such as temperature or moisture content of the air, can influence the impact of particulates or environmental corrosives and gaseous contaminant transfer. In the absence of specific limits that are set forth in this document, you must implement practices that maintain particulate and gas levels that are consistent with the protection of human health and safety. If Lenovo determines that the levels of particulates or gases in your environment have caused damage to the device, Lenovo may condition provision of repair or replacement of devices or parts on implementation of appropriate remedial measures to mitigate such environmental contamination. Implementation of such remedial measures is a customer responsibility.

Table 1. Limits for particulates and gases

Contaminant	Limits
Reactive gases	Severity level G1 as per ANSI/ISA 71.04-1985[1]: • The copper reactivity level shall be less than 200 Angstroms per month (Å/month ≈ 0.0035 µg/cm^2-hour weight gain).[2] • The silver reactivity level shall be less than 200 Angstroms per month (Å/month ≈ 0.0035 µg/cm^2-hour weight gain).[3] • The reactive monitoring of gaseous corrosivity must be conducted approximately 5 cm (2 in.) in front of the rack on the air inlet side at one-quarter and three-quarter frame height off the floor or where the air velocity is much higher.
Airborne particulates	Data centers must meet the cleanliness level of ISO 14644-1 class 8. For data centers without airside economizer, the ISO 14644-1 class 8 cleanliness might be met by choosing one of the following filtration methods: • The room air might be continuously filtered with MERV 8 filters. • Air entering a data center might be filtered with MERV 11 or preferably MERV 13 filters. For data centers with airside economizers, the choice of filters to achieve ISO class 8 cleanliness depends on the specific conditions present at that data center. • The deliquescent relative humidity of the particulate contamination should be more than 60% RH.[4] • Data centers must be free of zinc whiskers.[5]

[1] ANSI/ISA-71.04-1985. *Environmental conditions for process measurement and control systems: Airborne contaminants*. Instrument Society of America, Research Triangle Park, North Carolina, U.S.A.

[2] The derivation of the equivalence between the rate of copper corrosion growth in the thickness of the corrosion product in Å/month and the rate of weight gain assumes that Cu_2S and Cu_2O grow in equal proportions.

[3] The derivation of the equivalence between the rate of silver corrosion growth in the thickness of the corrosion product in Å/month and the rate of weight gain assumes that Ag_2S is the only corrosion product.

[4] The deliquescent relative humidity of particulate contamination is the relative humidity at which the dust absorbs enough water to become wet and promote ionic conduction.

[5] Surface debris is randomly collected from 10 areas of the data center on a 1.5 cm diameter disk of sticky electrically conductive tape on a metal stub. If examination of the sticky tape in a scanning electron microscope reveals no zinc whiskers, the data center is considered free of zinc whiskers.

Management options

The XClarity portfolio and other system management offerings described in this section are available to help you manage the servers more conveniently and efficiently.

Overview

Offerings	Description
Lenovo XClarity Controller	Baseboard management controller. Consolidates the service processor functionality, Super I/O, video controller, and remote presence capabilities into a single chip on the server system board. **Interface** • CLI application • GUI application • Mobile application • Web interface • REST API **Usage and downloads** https://pubs.lenovo.com/xcc/
Lenovo XClarity Administrator	Centralized interface for multi-server management. **Interface** • GUI application • Mobile application • Web interface • REST API **Usage and downloads** https://pubs.lenovo.com/lxpm-overview/
Lenovo XClarity Essentials toolset	Portable and light toolset for server configuration, data collection, and firmware updates. Suitable both for single-server or multi-server management contexts. **Interface** • **OneCLI**: CLI application • **Bootable Media Creator**: CLI application, GUI application • **UpdateXpress**: GUI application **Usage and downloads** https://pubs.lenovo.com/lxce-overview/
Lenovo XClarity Provisioning Manager	UEFI-based GUI tool on a single server that can simplify management tasks. **Interface** • Web interface (BMC remote access) • GUI application **Usage and downloads** https://pubs.lenovo.com/lxpm-overview/

Offerings	Description
Lenovo XClarity Integrator	Series of applications that integrate the management and monitoring functionalities of the Lenovo physical servers with the software used in a certain deployment infrastructure, such as VMware vCenter, Microsoft Admin Center, or Microsoft System Center while delivering additional workload resiliency. **Interface** GUI application **Usage and downloads** https://pubs.lenovo.com/lxci-overview/
Lenovo XClarity Energy Manager	Application that can manage and monitor server power and temperature. **Interface** • GUI application • Web Interface **Usage and downloads** https://datacentersupport.lenovo.com/solutions/lnvo-lxem
Lenovo Capacity Planner	Application that supports power consumption planning for a server or rack. **Interface** • GUI application • Web Interface **Usage and downloads** https://datacentersupport.lenovo.com/solutions/lnvo-lcp

Functions

Offerings		Functions							
		Multi-system mgmt	**OS deploy-ment**	**System configu-ration**	**Firm-ware up-dates**	**Event-s/alert moni-toring**	**Inven-tory/ logs**	**Pow-er mgmt**	**Power planning**
Lenovo XClarity Controller				√	√	√	√		
Lenovo XClarity Administrator		√	√	√	√	√	√		
Lenovo XClarity Essen-tials toolset	OneCLI	√		√	√	√	√		
	Bootable Media Creator			√	√		√		
	UpdateXpress			√	√				
Lenovo XClarity Provisioning Manager			√	√	√		√		
Lenovo XClarity Integrator		√	√[6]	√	√	√	√	√	

Offerings	Functions							
	Multi-system mgmt	**OS deploy-ment**	**System configu-ration**	**Firm-ware up-dates**	**Event-s/alert moni-toring**	**Inven-tory/ logs**	**Pow-er mgmt**	**Power planning**
Lenovo XClarity Energy Manager	√				√		√	
Lenovo Capacity Planner								√

Notes:

1. Most options can be updated through the Lenovo tools. Some options, such as GPU firmware or Omni-Path firmware, require the use of vendor tools.
2. Firmware updates are limited to Lenovo XClarity Provisioning Manager, BMC firmware, and UEFI updates only. Firmware updates for optional devices, such as adapters, are not supported.
3. The server UEFI settings for option ROM must be set to **UEFI** to update firmware using Lenovo XClarity Essentials Bootable Media Creator.
4. The server UEFI settings for option ROM must be set to **UEFI** for detailed adapter card information, such as model name and firmware levels, to be displayed in Lenovo XClarity Administrator, Lenovo XClarity Controller, or Lenovo XClarity Essentials OneCLI.
5. It's highly recommended that you check the power summary data for your server using Lenovo Capacity Planner before purchasing any new parts.
6. Lenovo XClarity Integrator supports Windows operating system deployment with the Microsoft System Center Configuration Manager (SCCM) deployment pack.

Chapter 2. Server components

This section provides information to help you locate your server components.

Front view

The front view of the server varies by model.

The illustrations in this topic show the server front views based on the supported drive bays.

Note: Your server might look different from the illustrations in this topic.

Front view of server models with two optical drive bays and eight 3.5-inch-drive bays	Front view of server models with two optical drive bays and sixteen 2.5-inch-drive bays
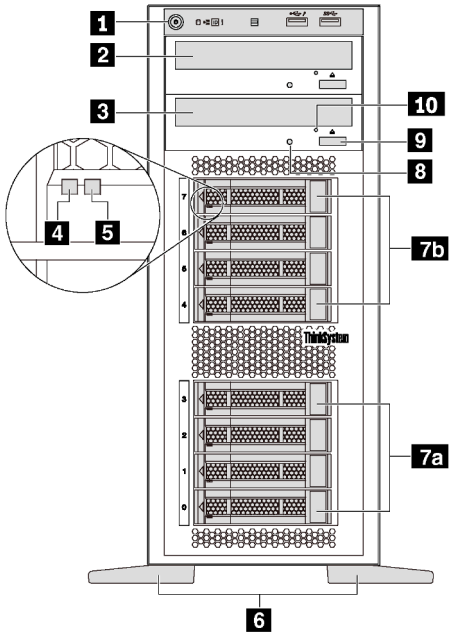	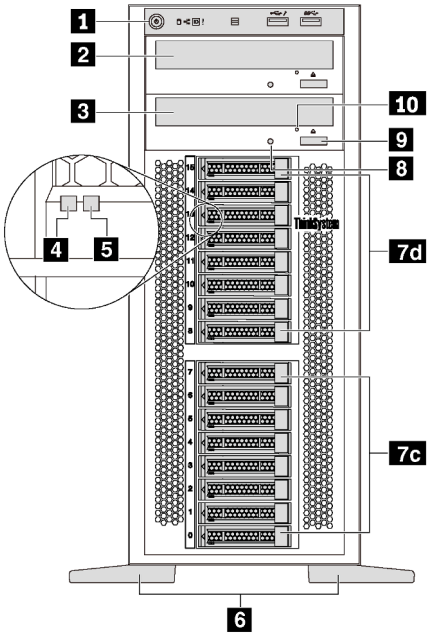

Figure 4. Front view of server models with optical drive bays

Table 2. Components on the front of server models with optical drive bays

Callout	Callout
1 Front panel	2 Optical-drive bay 2
3 Optical-drive bay 1	4 Drive activity LED (green)
5 Drive status LED (yellow)	6 Foot stands
7a 3.5-inch drive bays 0–3	7b 3.5-inch drive bays 4–7
7c 2.5-inch drive bays 0–7	7d 2.5-inch drive bays 8–15
8 Optical-drive status LED	9 Optical-drive eject/close button
10 Optical-drive manual-eject hole	

© Copyright Lenovo 2017, 2025

1 Front panel

For information about the controls, connectors, and status LEDs on the front panel, see "Front panel" on page 22.

2 Optical-drive bay 2

The 5.25-inch optical-drive bay 2 is for a secondary optical drive or a tape drive. Some models have a secondary optical drive or a tape drive installed.

3 Optical-drive bay 1

Depending on the model, your server might come with an optical drive installed in the 5.25-inch optical-drive bay 1.

4 Drive activity LED

5 Drive status LED

Each hot-swap drive has two LEDs.

Drive LED	Status	Description
4 Drive activity LED (left)	Solid green	The drive is powered but not active.
	Blinking green	The drive is active.
5 Drive status LED (right)	Solid yellow	The drive has an error.
	Blinking yellow (blinking slowly, about one flash per second)	The drive is being rebuilt.
	Blinking yellow (blinking rapidly, about four flashes per second)	The RAID adapter is locating the drive.

6 Foot stands

For tower-form-factor models, your server comes with four foot stands. To help the server stand steadily, ensure that you install the foot stands correctly as shown. See "Install the foot stands" on page 112.

7a 7b 7c 7d Drive bays

The drive bays are used to install 3.5-inch or 2.5-inch storage drives. When you install drives, follow the order of the drive bay numbers. The EMI integrity and cooling of the server are protected by having all drive bays occupied. The vacant drive bays must be occupied by drive bay fillers or drive fillers. Depending on the model, your server supports one of the following drive bay configurations:

- Four 3.5-inch-drive bays
- Eight 3.5-inch-drive bays
- Eight 2.5-inch-drive bays
- Sixteen 2.5-inch-drive bays

Note: For the 2.5-inch-drive-bay models that support NVMe drives, you can install up to four NVMe drives in bays 4–7.

8 Optical-drive status LED

The optical-drive status LED is blinking in green when the optical drive is working or in the POST process.

9 Optical-drive eject/close button

Press this button to eject or close the optical drive when the server power is on.

10 Optical-drive manual-eject hole

Insert a straightened paper clip into the optical-drive manual-eject hole to eject the disc tray when the eject/close button does not work.

Front view of server models with eight 3.5-inch-drive bays and four 2.5-inch-drive bays	Front view of server models with twenty 2.5-inch-drive bays
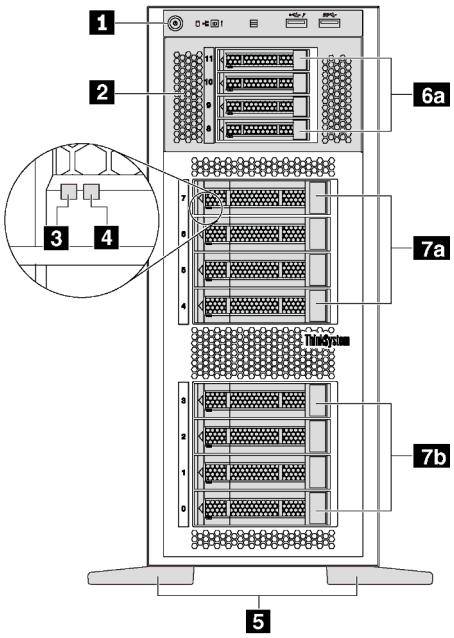	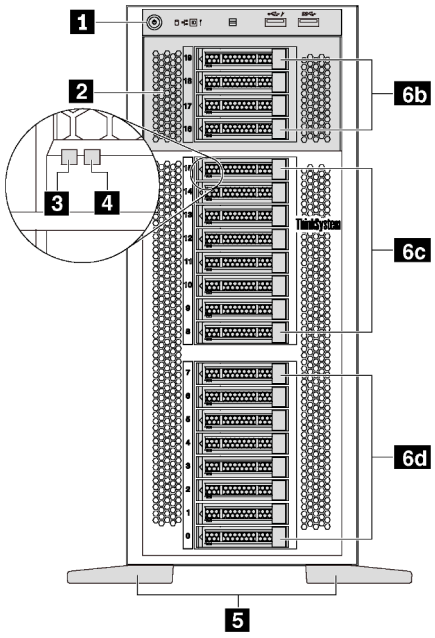

Figure 5. Front view of server models without optical drive bays

Table 3. Components on the front of server models without optical drive bays

Callout	Callout
1 Front panel	2 Expansion drive cage
3 Drive activity LED (green)	4 Drive status LED (yellow)
5 Foot stands	6a 2.5-inch drive bays 8–11
6b 2.5-inch drive bays 16–19	6c 2.5-inch drive bays 8–15
6d 2.5-inch drive bays 0–7	7a 3.5-inch drive bays 4–7
7b 3.5-inch drive bays 0–3	

1 Front panel

For information about the controls, connectors, and status LEDs on the front panel, see "Front panel" on page 22.

2 Expansion drive cage

For some server models, your server comes with an expansion drive cage. You can install up to four 2.5-inch SAS/SATA drives to the cage.

3 Drive activity LED

4 Drive status LED

Each hot-swap drive has two LEDs.

Drive LED	Status	Description
3 Drive activity LED (left)	Solid green	The drive is powered but not active.
	Blinking green	The drive is active.
4 Drive status LED (right)	Solid yellow	The drive has an error.
	Blinking yellow (blinking slowly, about one flash per second)	The drive is being rebuilt.
	Blinking yellow (blinking rapidly, about four flashes per second)	The RAID controller is locating the drive.

5 Foot stands

For tower-form-factor models, your server comes with four foot stands. To help the server stand steadily, ensure that you install the foot stands correctly as shown. See "Install the foot stands" on page 112.

6a 6b 6c 6d 7a 7b Drive bays

The drive bays are used to install 3.5-inch or 2.5-inch storage drives. The EMI integrity and cooling of the server are protected by having all drive bays occupied. The vacant drive bays must be occupied by drive bay fillers or drive fillers. When you install drives, follow the order of the drive bay numbers.

Note: For the 2.5-inch-drive-bay models that support NVMe drives, you can install up to four NVMe drives in bays 4–7.

Front panel

The front panel of the server provides controls, connectors, and LEDs.

The following illustration shows the control, connectors, and LEDs on the front panel of the server.

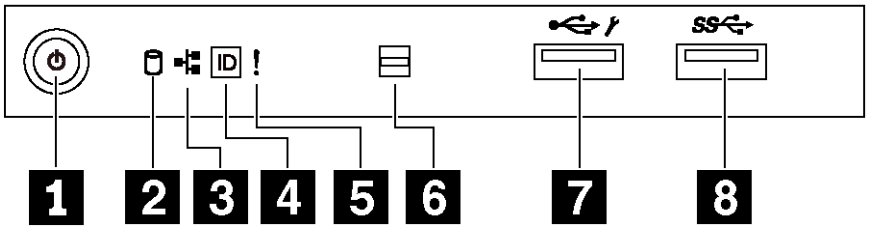

Figure 6. Front panel

Table 4. Components on the front panel

Callout	Callout
1 Power button with power status LED (green)	2 Simple-swap-drive activity LED (green)
3 Network activity LED (green)	4 System ID button with system ID LED (blue)
5 System error LED (yellow)	6 Opening for temperature sensor
7 XClarity Controller USB connector	8 USB 3.0 connector

1 Power button with power status LED

You can press the power button to turn on the server when you finish setting up the server. You also can hold the power button for several seconds to turn off the server if you cannot turn off the server from the operating system. The power status LED helps you to determine the current power status.

Status	Color	Description
Solid on	Green	The server is on and running.
Slow blinking (about one flash per second)	Green	The server is off and is ready to be powered on (standby state).
Fast blinking (about four flashes per second)	Green	The server is off, but the XClarity Controller is initializing, and the server is not ready to be powered on.
Off	None	There is no ac power applied to the server.

2 Simple-swap-drive activity LED

The simple-swap-drive activity LED is only for server models with simple-swap storage drives.

Status	Color	Description
Solid on	Green	The simple-swap drive is active.
Off	None	The simple-swap drive is not active.

3 Network activity LED

Compatibility of the NIC adapter and the network activity LED.

NIC adapter	NIC adapter
LOM adapter	Support
ML2 NIC adapter	Support
PCIe NIC adapter	Not support

The network activity LED on the front panel helps you identify the network connectivity and activity.

Status	Color	Description
On	Green	The server is connected to a network.
Blinking	Green	The network is connected and active.
Off	None	The server is disconnected from the network.

4 System ID button with system ID LED

Use this system ID button and the blue system ID LED to visually locate the server. A system ID LED is also located on the rear of the server. Each time you press the system ID button, the state of both the system ID LEDs changes. The LEDs can be changed to on, blinking, or off. You can also use the Lenovo XClarity Controller or a remote management program to change the state of the system ID LEDs to assist in visually locating the server among other servers.

If the XClarity Controller USB connector is set to have both the USB 2.0 function and XClarity Controller management function, you can press the system ID button for three seconds to switch between the two functions.

5 System error LED

The system error LED provides basic diagnostic functions for your server.

Status	Color	Description	Action
On	Yellow	An error has been detected on the server. Causes might include one or more of the following errors: • The temperature of the server reached the non-critical temperature threshold. • The voltage of the server reached the non-critical voltage threshold. • A fan has been detected to be running at low speed. • A fan has been removed. • The power supply has a critical error. • The power supply is not connected to the power.	Check the event log to determine the exact cause of the error.
Off	None	The server is off or the server is on and is working correctly.	None.

6 Opening for temperature sensor

Used to detect the surrounding temperature.

7 XClarity Controller USB connector

Depending on the setting, this connector supports USB 2.0 function, XClarity Controller management function, or both.

- If the connector is set for USB 2.0 function, you can attach a device that requires a USB 2.0 connection, such as a keyboard, a mouse, or a USB storage device.
- If the connector is set for XClarity Controller management function, you can attach a mobile device installed with the application to run XClarity Controller event logs.

- If the connector is set to have both functions, you can press the system ID button for three seconds to switch between the two functions.

For more information, see “Set the network connection for the Lenovo XClarity Controller” on page 119.

8 USB 3.0 connector

Used to attach a device that requires a USB 2.0 or 3.0 connection, such as a keyboard, a mouse, or a USB flash drive.

Rear view

The rear of the server provides access to several connectors and components.

Rear view of server models with a fixed power supply

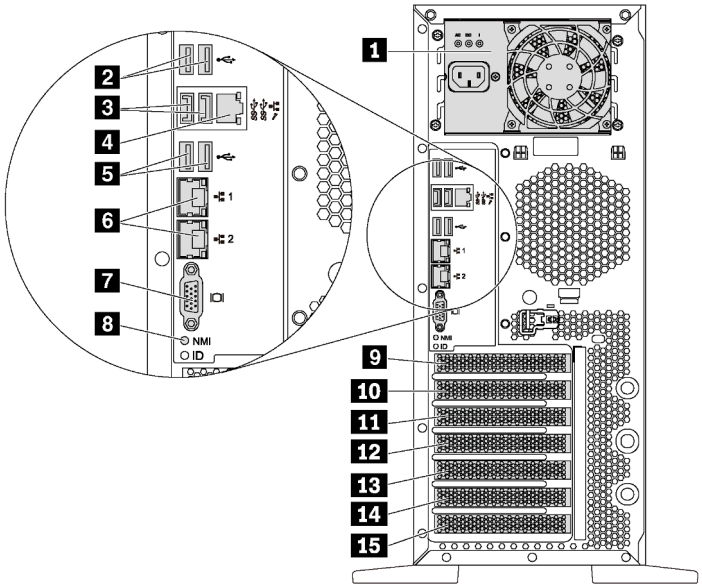

Figure 7. Rear view of server models with a fixed power supply

Table 5. Components on the rear of server models with a fixed power supply

Callout	Callout
1 Fixed power supply	2 USB 2.0 connectors (2)
3 USB 3.0 connectors (2)	4 XClarity Controller network connector
5 USB 2.0 connectors (2)	6 Ethernet connectors (2)
7 VGA connector	8 NMI button
9 Serial-port-module slot	10 PCIe slot 1
11 PCIe slot 2	12 PCIe slot 3
13 PCIe slot 4	14 PCIe slot 5
15 PCIe slot 6	

1 Fixed power supply

Used to connect the power cord.

2 3 5 USB connectors

Used to attach a device that requires a USB 2.0 or 3.0 connection, such as a keyboard, a mouse, or a USB flash drive.

4 XClarity Controller network connector

Used to attach an Ethernet cable to manage the system using XClarity Controller.

6 Ethernet connectors

Used to attach an Ethernet cable for a LAN. Each Ethernet connector has two status LEDs to help you identify the Ethernet connectivity and activity. For more information, see "Rear view LEDs" on page 28.

7 VGA connector

Used to attach a VGA-compatible video device, such as a VGA monitor.

8 NMI button

Press this button to force a nonmaskable interrupt (NMI) to the processor. By this way, you can blue screen the server and take a memory dump. You might have to use a pen or the end of a straightened paper clip to press the button.

9 Serial-port-module slot

Used to install a serial port module. The serial port module is available on some models. For instructions on how to install the serial port module, see "Install the serial port module" on page 92.

10 11 12 13 14 15 PCIe slots

Your server has six PCIe slots on the system board for you to install appropriate PCIe adapters. For information about the PCIe slots, see "Specifications" on page 5.

Rear view of server models with two hot-swap power supplies

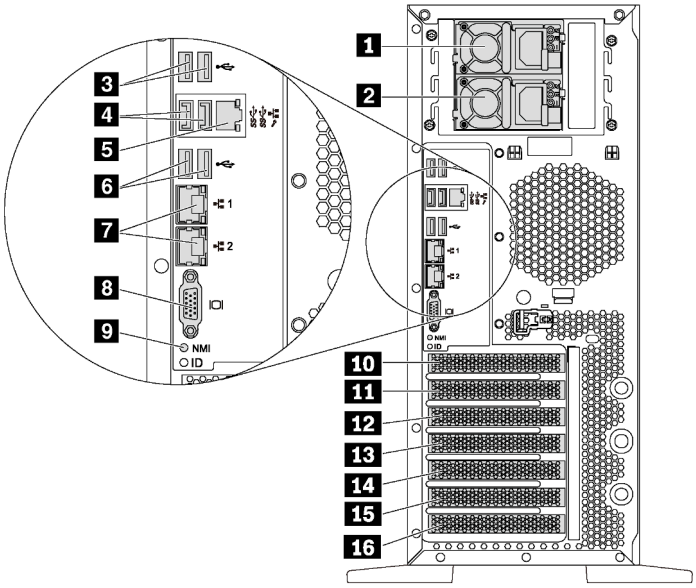

Figure 8. Rear view of server models with two hot-swap power supplies

Table 6. Components on the rear of server models with two hot-swap power supplies

Callout	Callout
1 Power supply 1	2 Power supply 2 (available on some models or available as an option)
3 USB 2.0 connectors (2)	4 USB 3.0 connectors (2)
5 XClarity Controller network connector	6 USB 2.0 connectors (2)
7 Ethernet connectors (2)	8 VGA connector
9 NMI button	10 Serial-port-module slot
11 PCIe slot 1	12 PCIe slot 2
13 PCIe slot 3	14 PCIe slot 4
15 PCIe slot 5	16 PCIe slot 6

1 Power supply 1

2 Power supply 2 (available on some models or available as an option)

The hot-swap redundant power supplies help you avoid significant interruption to the operation of the system when a power supply fails. You can purchase a power supply option from Lenovo and install the power supply to provide power redundancy without turning off the server.

On each power supply, there are three status LEDs near the power cord connector. For information about the status LEDs, see “Rear view LEDs” on page 28.

3 4 6 USB connectors

Used to attach a device that requires a USB 2.0 or 3.0 connection, such as a keyboard, a mouse, or a USB flash drive.

5 XClarity Controller network connector

Used to attach an Ethernet cable to manage the system using XClarity Controller.

7 Ethernet connectors

Used to attach an Ethernet cable for a LAN. Each Ethernet connector has two status LEDs to help you identify the Ethernet connectivity and activity. For more information, see "Rear view LEDs" on page 28.

8 VGA connector

Used to attach a VGA-compatible video device, such as a VGA monitor.

9 NMI button

Press this button to force a nonmaskable interrupt (NMI) to the processor. By this way, you can blue screen the server and take a memory dump. You might have to use a pen or the end of a straightened paper clip to press the button.

10 Serial-port-module slot

Used to install a serial port module. The serial port module is available on some models. For instructions on how to install the serial port module, see "Install the serial port module" on page 92.

11 12 13 14 15 16 PCIe slots

Your server has six PCIe slots on the system board for you to install appropriate PCIe adapters. For information about the PCIe slots, see "Specifications" on page 5.

Rear view LEDs

The illustration in this section shows the LEDs on the rear the server.

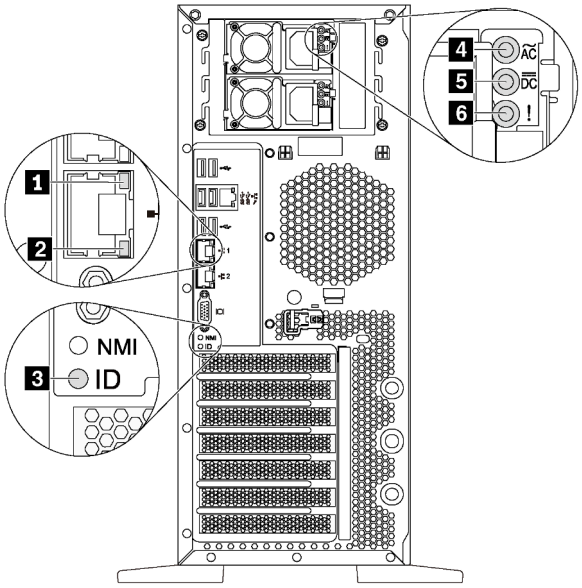

Figure 9. Rear view LEDs of the server

Table 7. LEDs on the rear of the server

Callout	Callout
1 Ethernet link LED (green)	2 Ethernet activity LED (green)
3 System ID LED (blue)	4 Power input LED (green)
5 Power output LED (green)	6 Power supply error LED (yellow)

1 2 Ethernet status LEDs

Each network connector has two status LEDs.

Ethernet status LED	Color	Status	Description
1 Ethernet link LED	Green	On	Network link is established.
	None	Off	Network link is disconnected.
2 Ethernet activity LED	Green	Blinking	Network link is connected and active.
	None	Off	The server is disconnected from a LAN.

3 System ID LED

The blue system ID LED helps you to visually locate the server. A system ID LED is also located on the front of the server. Each time you press the system ID button, the state of both the system ID LEDs changes. The LEDs can be changed to on, blinking, or off. You can also use the Lenovo XClarity Controller or a remote management program to change the state of the system ID LEDs to assist in visually locating the server among other servers.

4 Power input LED
5 Power output LED
6 Power supply error LED

Each hot-swap power supply has three status LEDs.

LED	Description
4 Power input LED	• Off: The power supply is disconnected from the ac power source or a power problem occurs. • Green: The power supply is connected to the ac power source.
5 Power output LED	• Green: The server is on and the power supply is working normally. • Blinking green: The power supply is in zero-output mode (standby). When the server power load is low, one of the installed power supplies enters into the standby state while the other one delivers entire load. When the power load increases, the standby power supply will switch to active state to provide sufficient power to the server. To disable zero-output mode, start the Setup utility, go to **System Settings → Power → Zero Output** and select **Disable**. If you disable zero-output mode, both power supplies will be in the active state. • Off: The server is powered off, or the power supply is not working properly. If the server is powered on but the power output LED is off, replace the power supply.
6 Power supply error LED	• Off: The power supply is working normally. • Yellow: The power supply has failed. To resolve the issue, replace the power supply.

System board components

The illustration in this section shows the component locations on the system board.

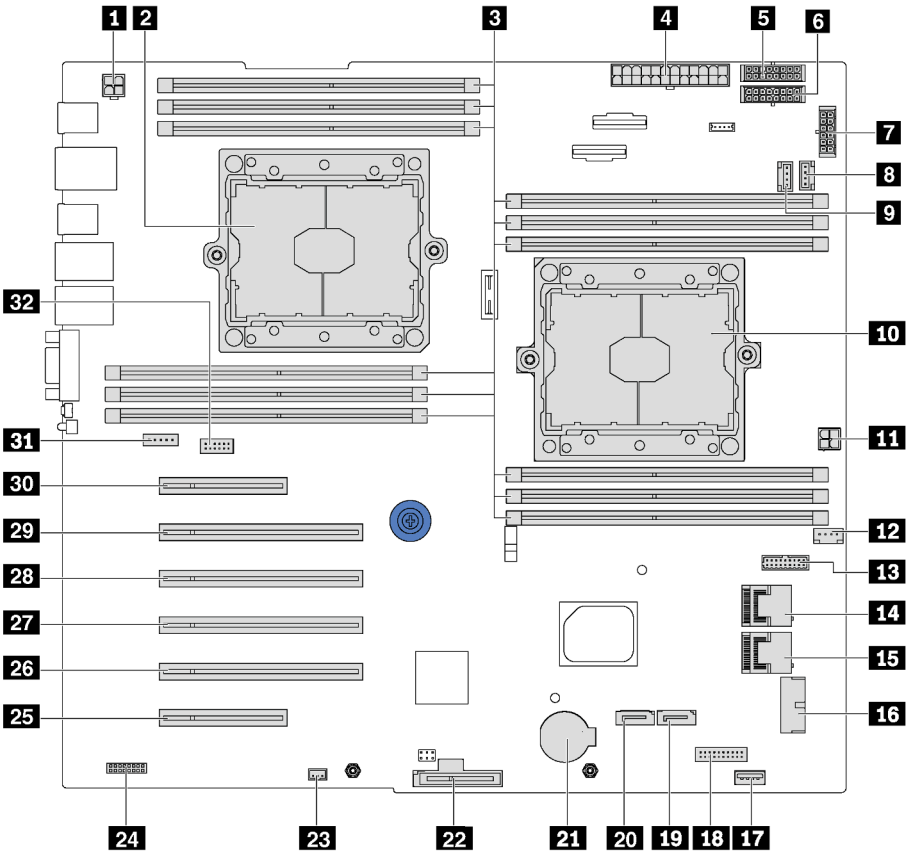

Figure 10. System board components

Table 8. Components on the system board

Callout	Callout
1 CPU 2 power connector	2 Processor 2 socket
3 DIMM slots (12)	4 Main power connector
5 Backplane 1 power connector	6 Backplane 2 power connector
7 Backplane 3 power connector	8 System fan 2 connector
9 System fan 3 connector	10 Processor 1 socket
11 CPU 1 power connector	12 System fan 1 connector
13 Power-interface-board signal connector	14 SAS 4–7 connector
15 SAS 0–3 connector	16 Front-panel-USB connector
17 Internal USB 3.0 connector	18 Operator-information-panel connector
19 Optical-drive-2 signal connector	20 Optical-drive-1 signal connector
21 CMOS battery connector	22 M.2 module slot

Table 8. Components on the system board (continued)

Callout	Callout
23 Intrusion switch connector	24 TCM[1]/TPM[2] connector (for only)
25 PCIe slot 6 (for processor 1)	26 PCIe slot 5 (for processor 2)
27 PCIe slot 4 (for processor 2)	28 PCIe slot 3 (for processor 1)
29 PCIe slot 2 (for processor 1)	30 PCIe slot 1 (for processor 1)
31 System fan 4 connector	32 Serial-port-module connector

Notes:

- [1] Trusted Cryptography Module
- [2] Trusted Platform Module

Internal cable routing

Some of the components in the server have internal cables and cable connectors.

To connect cables, observe the following guidelines:

- Turn off the server before you connect or disconnect any internal cables.
- See the documentation that comes with any external devices for additional cabling instructions. It might be easier for you to route cables before you connect the devices to the server.
- Cable identifiers of some cables are printed on the cables that come with the server and optional devices. Use these identifiers to connect the cables to the correct connectors.
- Ensure that the cable is not pinched and does not cover any connectors or obstruct any components on the system board.
- Ensure that the relevant cables pass through the cable clips.

Attention: Strictly observe the following instructions to avoid damaging cable sockets on the system board. Any damage to the cable sockets might require replacing the system board.

- Connect cable connectors vertically or horizontally in alignment with the orientations of the corresponding cable sockets, avoiding any tilt.
- To disconnect cables from the system board, do as follows:
  1. Press and hold all latches, release tabs, or locks on cable connectors to release the cable connectors.
  2. Remove the cable connectors vertically or horizontally in alignment with the orientations of the corresponding cable sockets, avoiding any tilt.

     Note: The cable connectors might look different from those in the illustration, but the removal procedure is the same.

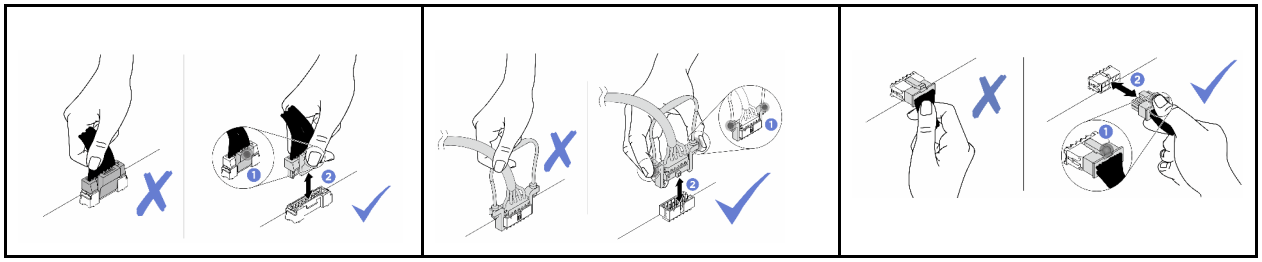

Optical drive

Use the section to understand the cable routing for the optical drives.

Note: Ensure that all cables are routed through the correct cable clips.

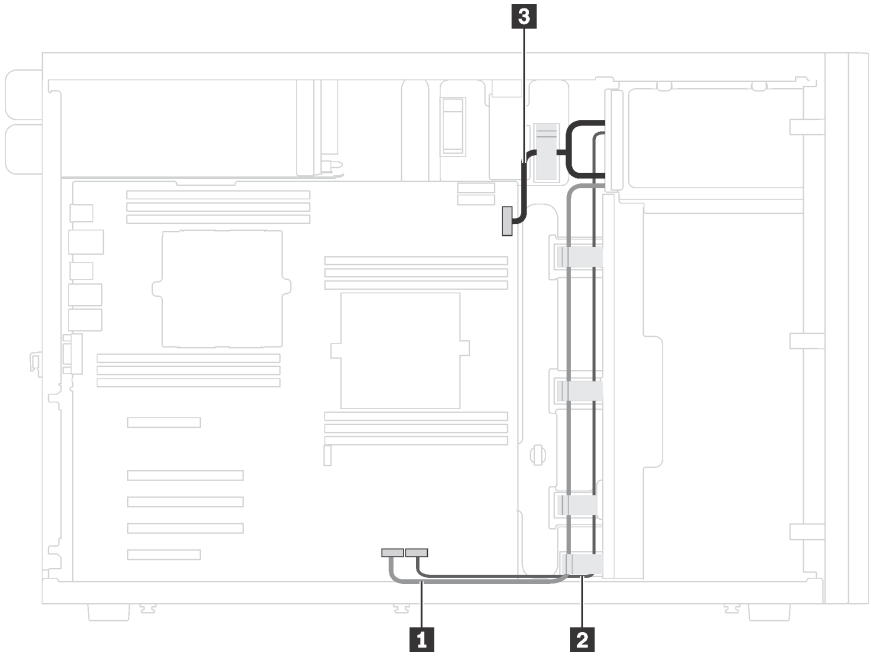

Figure 11. Cable routing for the optical drives

Cable	From	To
1 Signal cable	Signal connector on the optical drive 1	Optical-drive-1 signal connector on the system board
2 Signal cable	Signal connector on the optical drive 2	Optical-drive-2 signal connector on the system board
3 Power cable	Power connector on each optical drive	Backplane 3 power connector on the system board

Tape drive

Use the section to understand the cable routing for the tape drive.

SAS tape drive

Note: Ensure that all cables are routed through the correct cable clips.

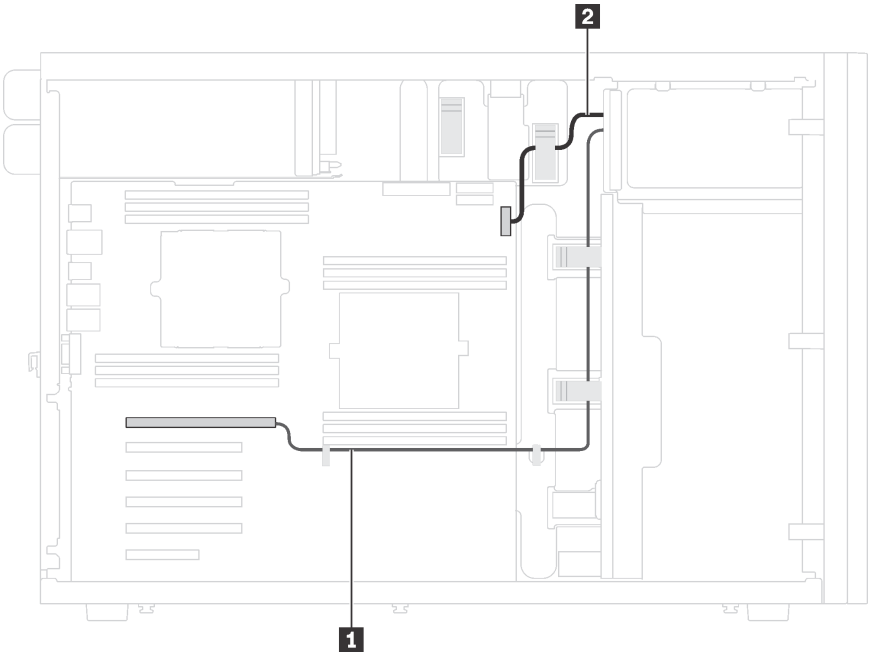

Figure 12. Cable routing for the SAS tape drive

Cable	From	To
1 Signal cable	Signal connector on the tape drive	An available connector on the RAID adapter
2 Power cable	Power connector on the tape drive	Backplane 3 power connector on the system board

USB tape drive

Note: Ensure that all cables are routed through the correct cable clips.

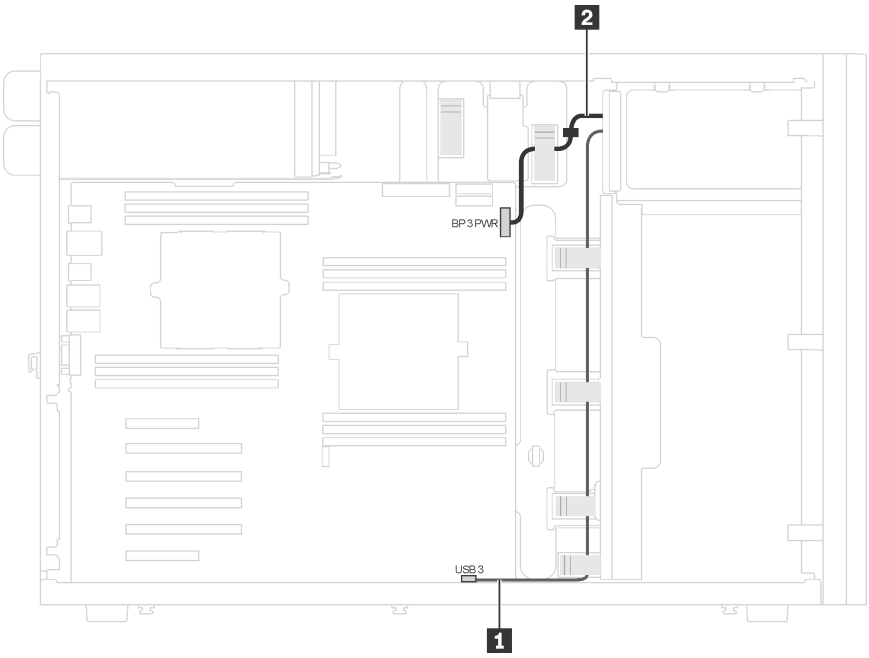

Figure 13. Cable routing for the USB tape drive

Cable	From	To
1 Signal cable	Signal connector on the tape drive	Internal USB 3.0 connector on the system board
2 Power cable	Power connector on the tape drive	Backplane 3 power connector on the system board

Power interface board

Use the section to understand the cable routing for the power interface board.

Note: Ensure that all cables are routed through the correct cable clips.

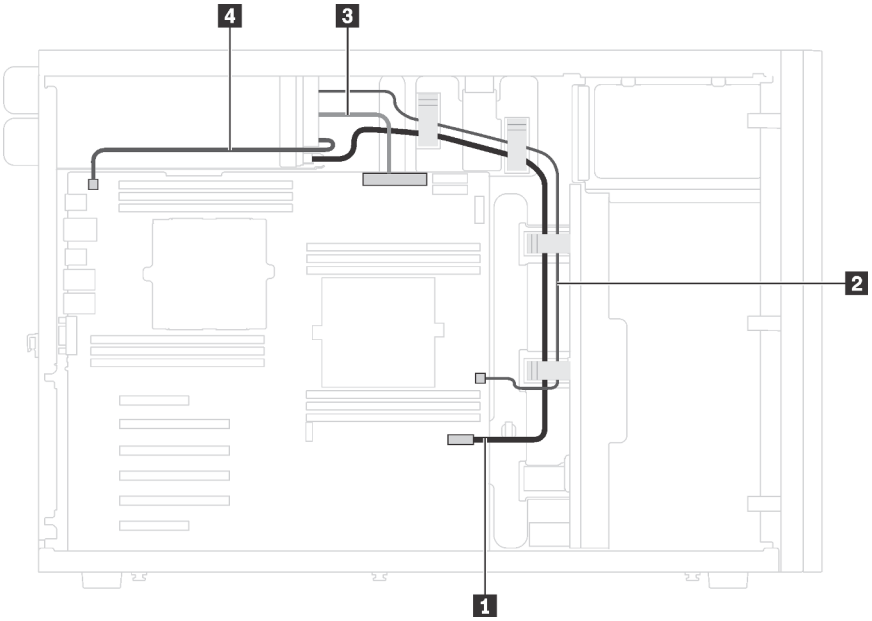

Figure 14. Cable routing for the power interface board

Cable	From	To
1 Signal cable	Signal connector on the power interface board	Power-interface-board signal connector on the system board
2 CPU 1 power cable	CPU 1 connector on the power interface board	CPU 1 power connector on the system board
3 Power cable	Main power connector on the power interface board	Main power connector on the system board
4 CPU 2 power cable	CPU 2 connector on the power interface board	CPU 2 power connector on the system board

Graphics adapter

Use the section to understand the cable routing for the graphics adapters.

Note: Ensure that all cables are routed through the correct cable clips.

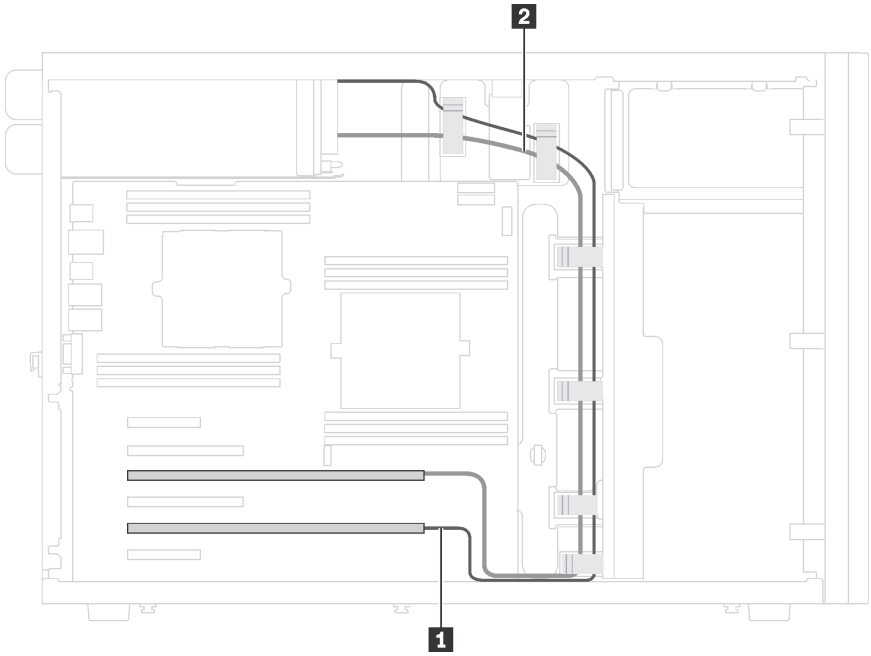

Figure 15. Cable routing for the graphics adapters

Cable	From	To
1 Power cable	Power connector on one graphics adapter	GPU 1 connector on the power interface board
2 Power cable	Power connector on another graphics adapter	GPU 2 connector on the power interface board

Server models with eight 3.5-inch simple-swap drives

Use this section to understand the cable routing for server models with eight 3.5-inch simple-swap drives.

Note: Ensure that all cables are routed through the correct cable clips.

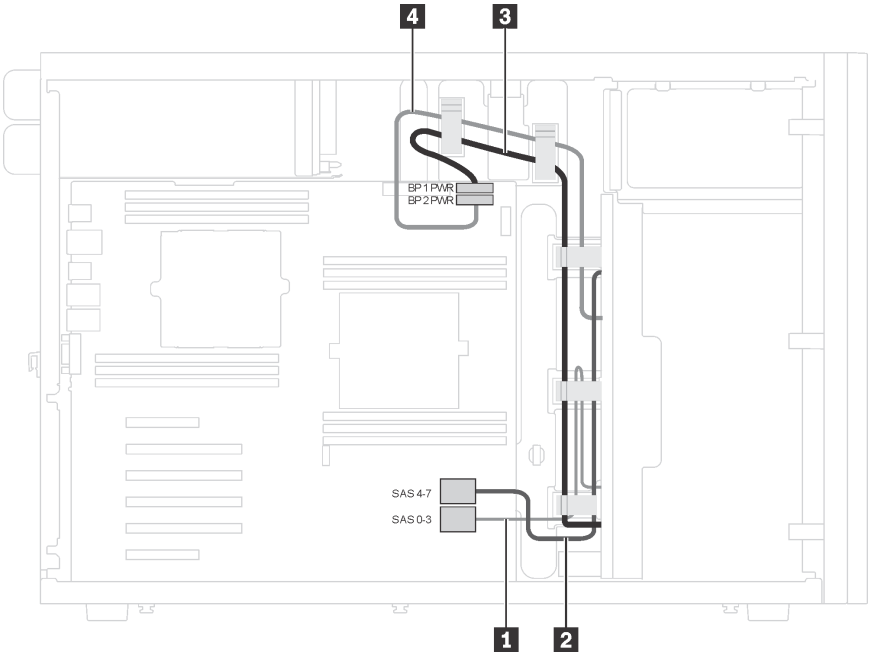

Figure 16. Cable routing for server models with eight 3.5-inch simple-swap drives

From	To
1 Signal cable on backplate 1	SAS 0–3 connector on the system board
2 Signal cable on backplate 2	SAS 4–7 connector on the system board
3 Power cable on backplate 1	Backplane 1 power connector on the system board
4 Power cable on backplate 2	Backplane 2 power connector on the system board

Hot-swap-drive backplane

Use the section to understand the cable routing for hot-swap-drive backplanes.

This topic contains the following information:

- "Server models with sixteen 2.5-inch hot-swap drives" on page 39
- "Server models with twenty 2.5-inch hot-swap drives" on page 44
- "Server models with eight 3.5-inch hot-swap drives" on page 52
- "Server models with eight 3.5-inch hot-swap drives and four 2.5-inch hot-swap drives" on page 53

Before you route cables for backplanes, observe the following guidelines when select a PCIe slot:

- The NVMe adapter can be installed only in PCIe slot 2.
- Internal RAID adapters can be installed in either PCIe slot 1 or PCIe slot 2.

Server models with sixteen 2.5-inch hot-swap drives

Use this section to understand the cable routing for server models with sixteen 2.5-inch hot-swap drives.

Server model: sixteen 2.5-inch SAS/SATA drives, two 8i RAID adapters

Notes:

- Ensure that all cables are routed through the correct cable clips.
- Broken lines indicate the hidden parts.

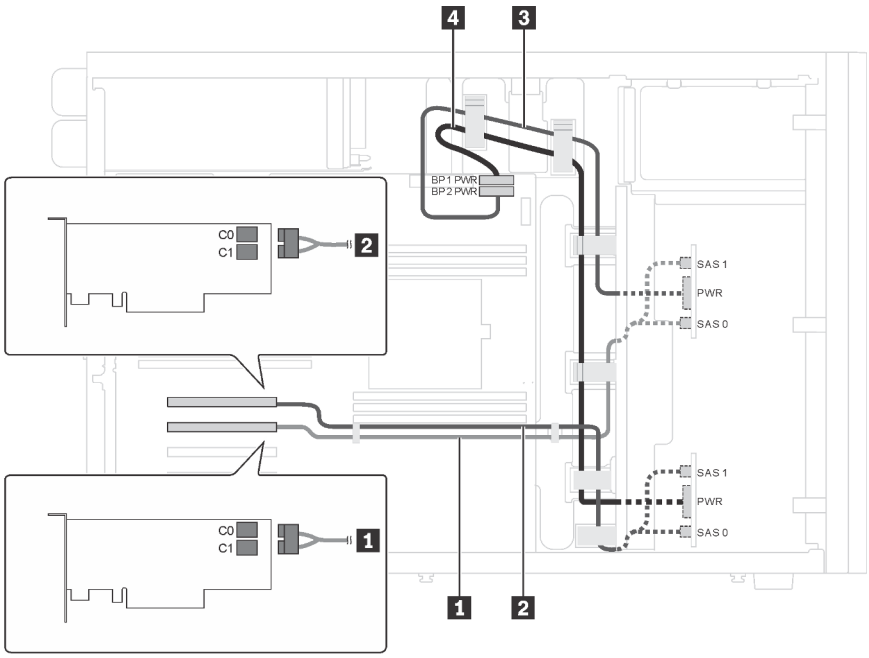

Figure 17. Cable routing for server models with sixteen 2.5-inch SAS/SATA drives and two 8i RAID adapters

Cable	From	To
1 SAS signal cable for backplane 1*	SAS 0 and SAS 1 connectors on backplane 1	HBA/RAID adapter: • Gen 3: C0C1 • Gen 4: C0
2 SAS signal cable for backplane 2*	SAS 0 and SAS 1 connectors on backplane 2	HBA/RAID adapter: • Gen 3: C0C1 • Gen 4: C0
3 Power cable for backplane 2	Power connector on backplane 2	Backplane 2 power connector on the system board
4 Power cable for backplane 1	Power connector on backplane 1	Backplane 1 power connector on the system board

Note: *When Gen 4 HBA/RAID adapter is installed, ensure you use Gen 4 SAS signal cables (ThinkSystem ST550 2.5" SAS/SATA/AnyBay 8-Bay X40 RAID Cable Kit).

Server model: sixteen 2.5-inch SAS/SATA drives, one 24i RAID adapter

Notes:

- Ensure that all cables are routed through the correct cable clips.

- Broken lines indicate the hidden parts.

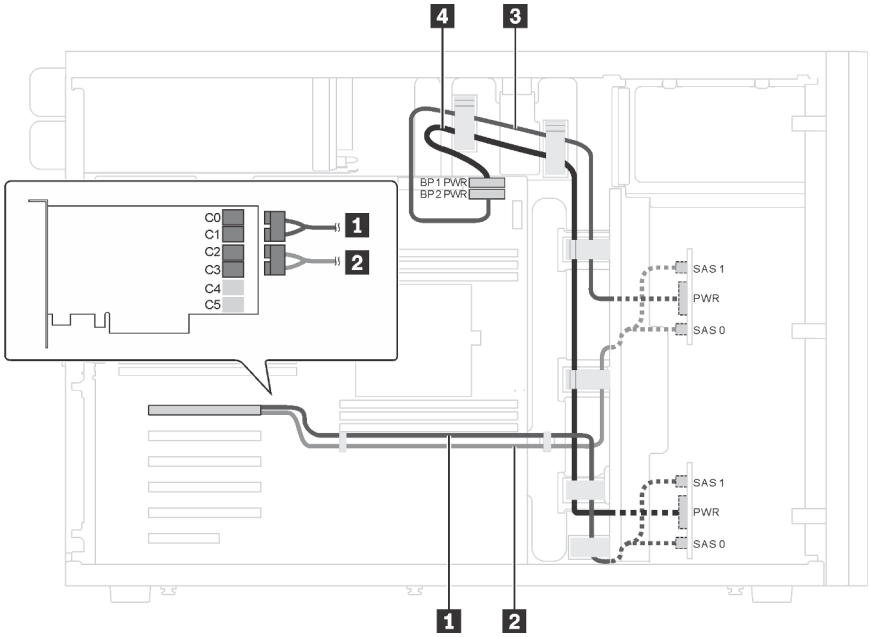

Figure 18. Cable routing for server models with sixteen 2.5-inch SAS/SATA drives and one 24i RAID adapter

Cable	From	To
1 SAS signal cable for backplane 1	SAS 0 and SAS 1 connectors on backplane 1	C0 and C1 connectors on the 24i RAID adapter
2 SAS signal cable for backplane 2	SAS 0 and SAS 1 connectors on backplane 2	C2 and C3 connectors on the 24i RAID adapter
3 Power cable for backplane 2	Power connector on backplane 2	Backplane 2 power connector on the system board
4 Power cable for backplane 1	Power connector on backplane 1	Backplane 1 power connector on the system board

Server model: sixteen 2.5-inch SAS/SATA drives, one 32i RAID adapter

Notes:

- Ensure that all cables are routed through the correct cable clips.
- Broken lines indicate the hidden parts.

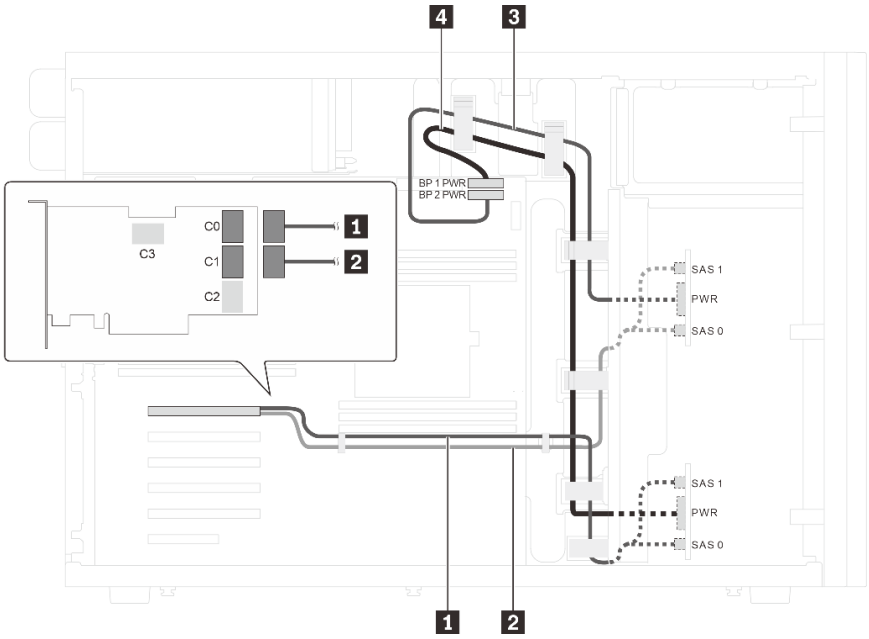

Figure 19. Cable routing for server models with sixteen 2.5-inch SAS/SATA drives and one 32i RAID adapter

Cable	From	To
1 SAS signal cable for backplane 1*	SAS 0 and SAS 1 connectors on backplane 1	C0 connector on the 32i RAID adapter (Gen 4)
2 SAS signal cable for backplane 2*	SAS 0 and SAS 1 connectors on backplane 2	C1 connector on the 32i RAID adapter (Gen 4)
3 Power cable for backplane 2	Power connector on backplane 2	Backplane 2 power connector on the system board
4 Power cable for backplane 1	Power connector on backplane 1	Backplane 1 power connector on the system board

Note: *When Gen 4 HBA/RAID adapter is installed, ensure you use Gen 4 SAS signal cable (ThinkSystem ST550 2.5" SAS/SATA/AnyBay 8-Bay X40 RAID Cable Kit).

Server model: twelve 2.5-inch SAS/SATA drives, four 2.5-inch SAS/SATA/NVMe drives, one 16i RAID adapter, one NVMe adapter

Notes:

- Ensure that all cables are routed through the correct cable clips.
- Broken lines indicate the hidden parts.

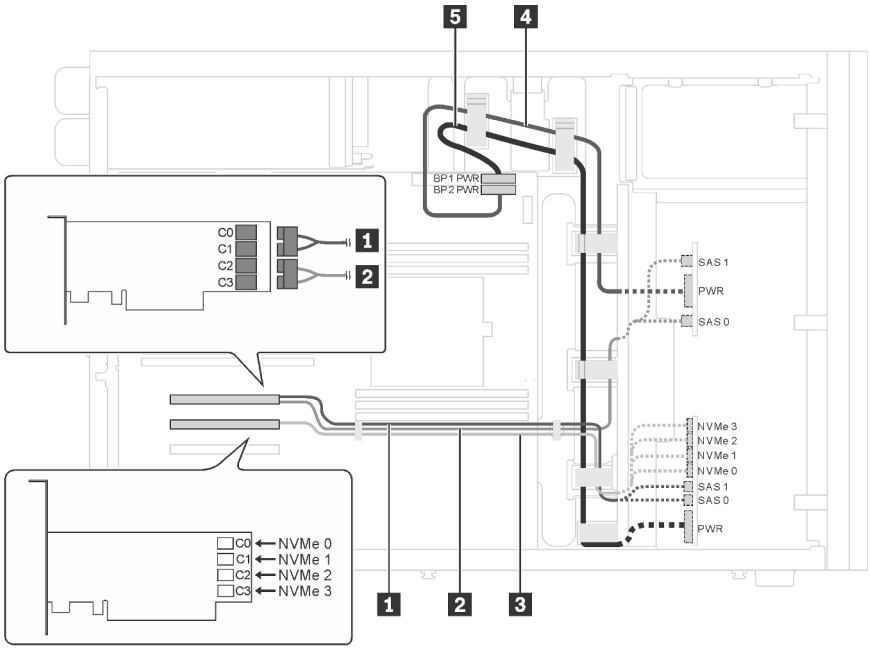

Figure 20. Cable routing for server models with twelve 2.5-inch SAS/SATA drives, four 2.5-inch SAS/SATA/NVMe drives, one 16i RAID adapter, and one NVMe adapter

Cable	From	To
1 SAS signal cable for backplane 1*	SAS 0 and SAS 1 connectors on backplane 1	HBA/RAID adapter: • Gen 3: C0C1 • Gen 4: C0
2 SAS signal cable for backplane 2*	SAS 0 and SAS 1 connectors on backplane 2	HBA/RAID adapter: • Gen 3: C2C3 • Gen 4: C1
3 NVMe signal cable for backplane 1	NVMe 0, NVMe 1, and NVMe 2, and NVMe 3 connectors on backplane 1	C0, C1, C2, and C3 connectors on the NVMe adapter
4 Power cable for backplane 2	Power connector on backplane 2	Backplane 2 power connector on the system board
5 Power cable for backplane 1	Power connector on backplane 1	Backplane 1 power connector on the system board

Note: *When Gen 4 HBA/RAID adapter is installed, ensure you use Gen 4 SAS signal cable (ThinkSystem ST550 2.5" SAS/SATA/AnyBay 8-Bay X40 RAID Cable Kit).

Server model: twelve 2.5-inch SAS/SATA drives, four 2.5-inch SAS/SATA/NVMe drives, two 8i RAID adapters, one NVMe adapter

Notes:

- Ensure that all cables are routed through the correct cable clips.
- Broken lines indicate the hidden parts.

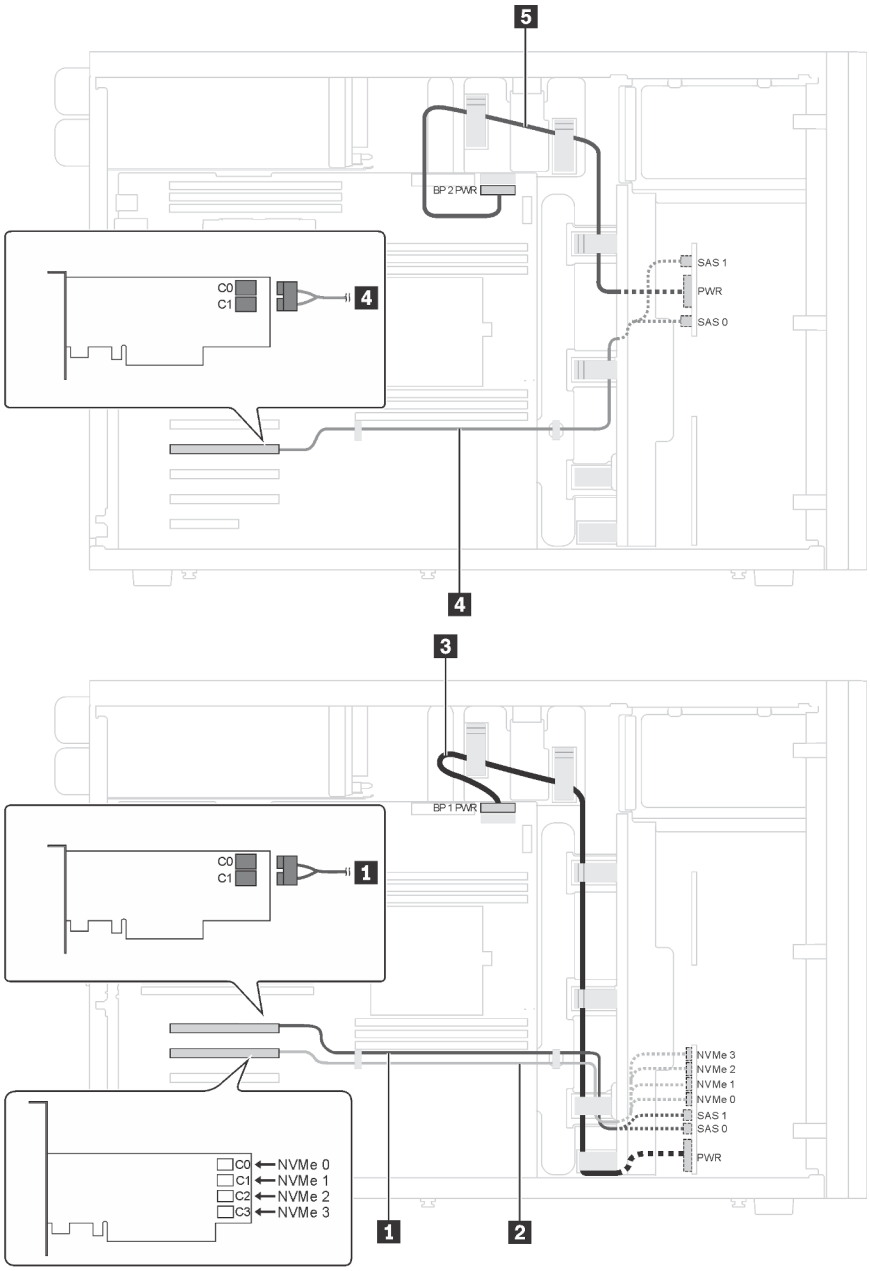

Figure 21. Cable routing for server models with twelve 2.5-inch SAS/SATA drives, four 2.5-inch SAS/SATA/NVMe drives, two 8i RAID adapters, and one NVMe adapter

Cable	From	To
1 SAS signal cable for backplane 1*	SAS 0 and SAS 1 connectors on backplane 1	HBA/RAID adapter: • Gen 3: C0C1 • Gen 4: C0
2 NVMe signal cable for backplane 1	NVMe 0, NVMe 1, and NVMe 2, and NVMe 3 connectors on backplane 1	C0, C1, C2, and C3 connectors on the NVMe adapter
3 Power cable for backplane 1	Power connector on backplane 1	Backplane 1 power connector on the system board

Cable	From	To
4 SAS signal cable for backplane 2*	SAS 0 and SAS 1 connectors on backplane 2	HBA/RAID adapter: • Gen 3: C0C1 • Gen 4: C0
5 Power cable for backplane 2	Power connector on backplane 2	Backplane 2 power connector on the system board

Note: *When Gen 4 HBA/RAID adapter is installed, ensure you use Gen 4 SAS signal cable (ThinkSystem ST550 2.5" SAS/SATA/AnyBay 8-Bay X40 RAID Cable Kit).

Server models with twenty 2.5-inch hot-swap drives

Use this section to understand the cable routing for server models with twenty 2.5-inch hot-swap drives.

Server model: twenty 2.5-inch SAS/SATA drives, one 24i RAID adapter

Notes:

- Ensure that all cables are routed through the correct cable clips.
- Broken lines indicate the hidden parts.

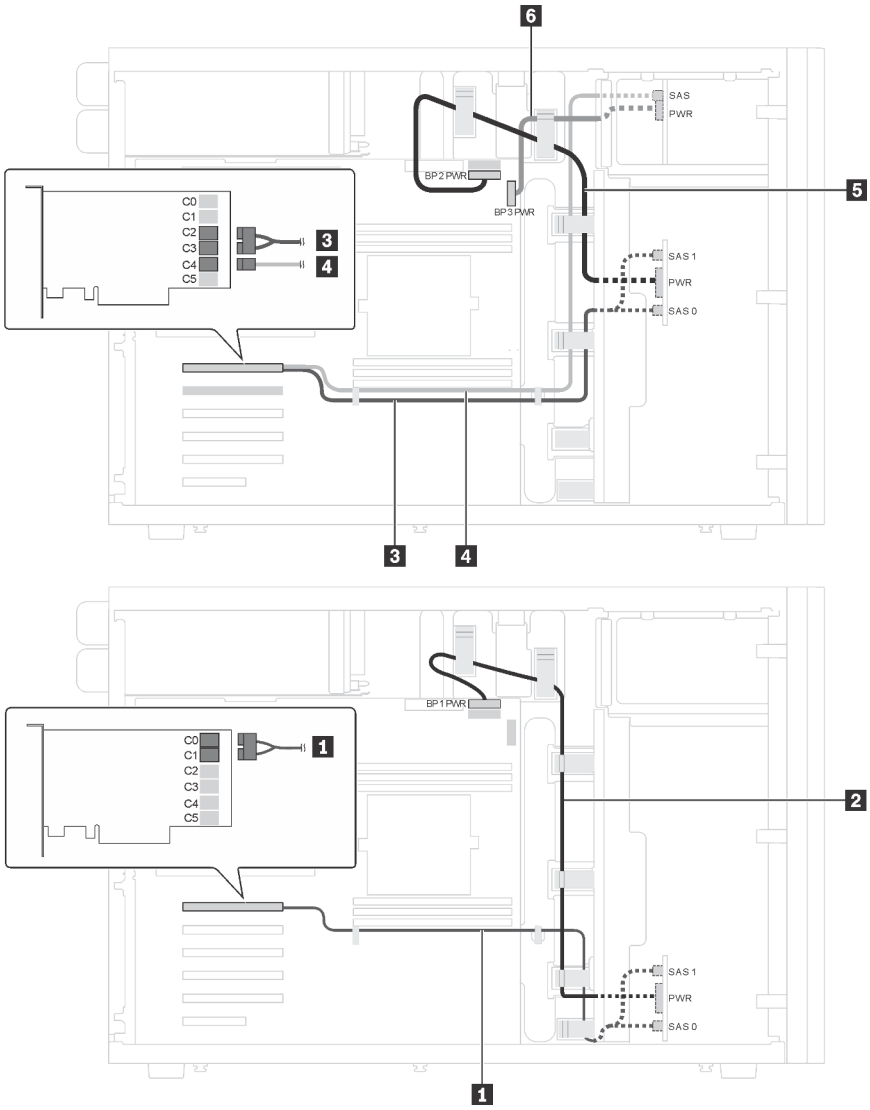

Figure 22. Cable routing for server models with twenty 2.5-inch SAS/SATA drives and one 24i RAID adapter

Cable	From	To
1 SAS signal cable for backplane 1	SAS 0 and SAS 1 connectors on backplane 1	C0 and C1 connectors on the 24i RAID adapter
2 Power cable for backplane 1	Power connector on backplane 1	Backplane 1 power connector on the system board
3 SAS signal cable for backplane 2	SAS 0 and SAS 1 connectors on backplane 2	C2 and C3 connectors on the 24i RAID adapter
4 SAS signal cable for backplane 3	SAS connector on backplane 3	C4 connector on the 24i RAID adapter
5 Power cable for backplane 2	Power connector on backplane 2	Backplane 2 power connector on the system board
6 Power cable for backplane 3	Power connector on backplane 3	Backplane 3 power connector on the system board

Server model: twenty 2.5-inch SAS/SATA drives, one 32i RAID adapter

Notes:

- Ensure that all cables are routed through the correct cable clips.
- Broken lines indicate the hidden parts.

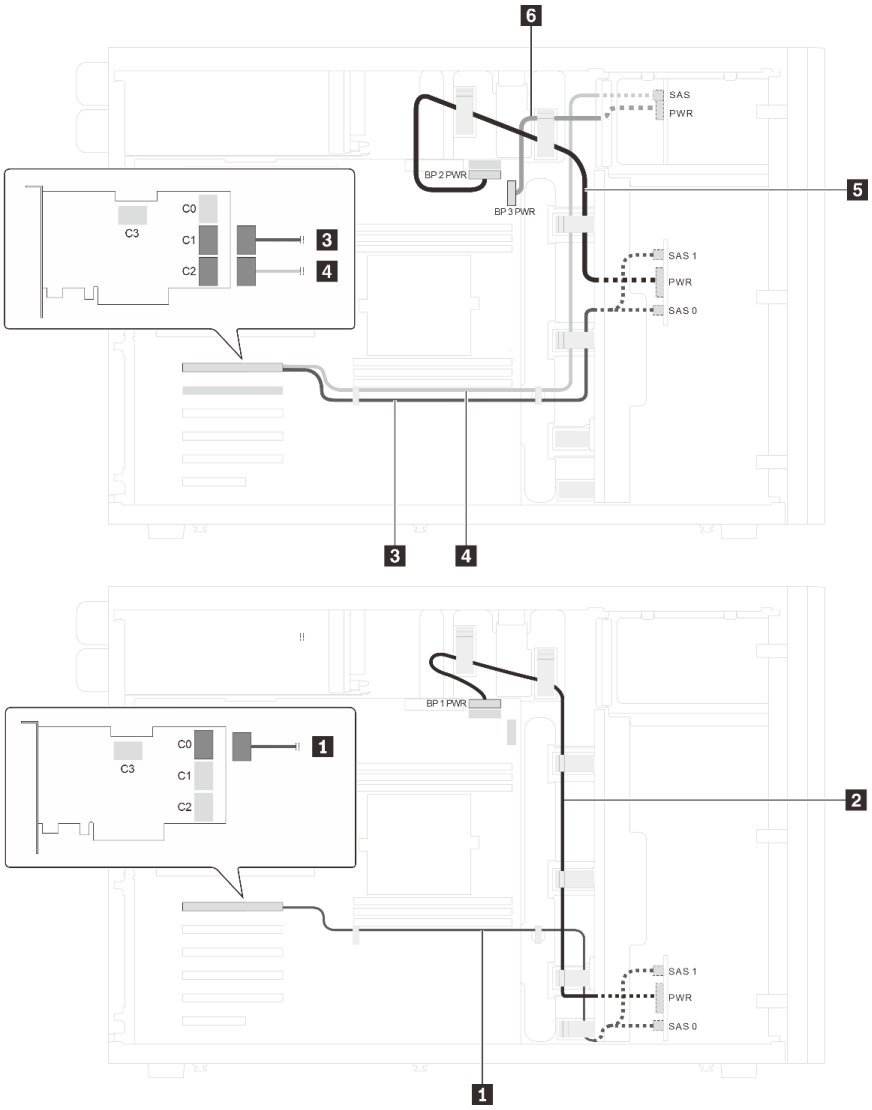

Figure 23. Cable routing for server models with twenty 2.5-inch SAS/SATA drives and one 32i RAID adapter

Cable	From	To
1 SAS signal cable for backplane 1*	SAS 0 and SAS 1 connectors on backplane 1	C0 connector on the 32i RAID adapter
2 Power cable for backplane 1	Power connector on backplane 1	Backplane 1 power connector on the system board
3 SAS signal cable for backplane 2*	SAS 0 and SAS 1 connectors on backplane 2	C1 connector on the 32i RAID adapter
4 SAS signal cable for backplane 3*	SAS connector on backplane 3	C2 connector on the 32i RAID adapter

Cable	From	To
5 Power cable for backplane 2	Power connector on backplane 2	Backplane 2 power connector on the system board
6 Power cable for backplane 3	Power connector on backplane 3	Backplane 3 power connector on the system board

Notes: *When Gen 4 HBA/RAID adapter is installed, ensure you use Gen 4 SAS signal cable:

- Cables 1 and 3: ThinkSystem ST550 2.5" SAS/SATA/AnyBay 8-Bay X40 RAID Cable Kit
- Cable 4: ThinkSystem ST550 2.5" SAS/SATA 4-Bay X40 RAID Cable Kit

Server model: twenty 2.5-inch SAS/SATA drives, one 8i RAID adapter, one 16i RAID adapter

Notes:

- Ensure that all cables are routed through the correct cable clips.
- Broken lines indicate the hidden parts.

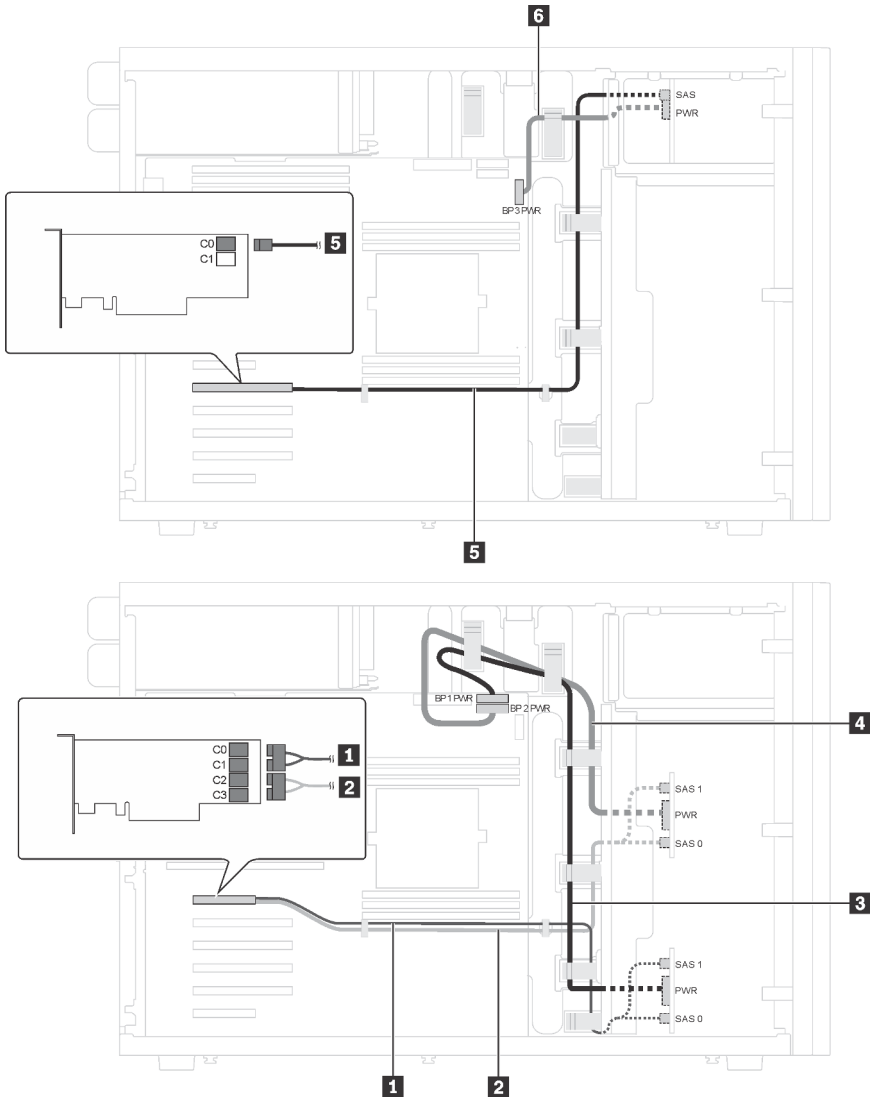

Figure 24. Cable routing for server models with twenty 2.5-inch SAS/SATA drives, one 8i RAID adapter and one 16i RAID adapter

Cable	From	To
1 SAS signal cable for backplane 1*	SAS 0 and SAS 1 connectors on backplane 1	HBA/RAID adapter: • Gen 3: C0C1 • Gen 4: C0
2 SAS signal cable for backplane 2*	SAS 0 and SAS 1 connectors on backplane 2	HBA/RAID adapter: • Gen 3: C2C3 • Gen 4: C1
3 Power cable for backplane 1	Power connector on backplane 1	Backplane 1 power connector on the system board
4 Power cable for backplane 2	Power connector on backplane 2	Backplane 2 power connector on the system board

Cable	From	To
5 SAS signal cable for backplane 3*	SAS connector on backplane 3	HBA/RAID adapter: • Gen 3: C0 • Gen 4: C0
6 Power cable for backplane 3	Power connector on backplane 3	Backplane 3 power connector on the system board

Notes: *When Gen 4 HBA/RAID adapter is installed, ensure you use Gen 4 SAS signal cable:

- Cables 1 and 2: ThinkSystem ST550 2.5" SAS/SATA/AnyBay 8-Bay X40 RAID Cable Kit
- Cable 5: ThinkSystem ST550 2.5" SAS/SATA 4-Bay X40 RAID Cable Kit

Server model: sixteen 2.5-inch SAS/SATA drives, four 2.5-inch SAS/SATA/NVMe drives, one 24i RAID adapter, one NVMe adapter

Notes:

- Ensure that all cables are routed through the correct cable clips.
- Broken lines indicate the hidden parts.

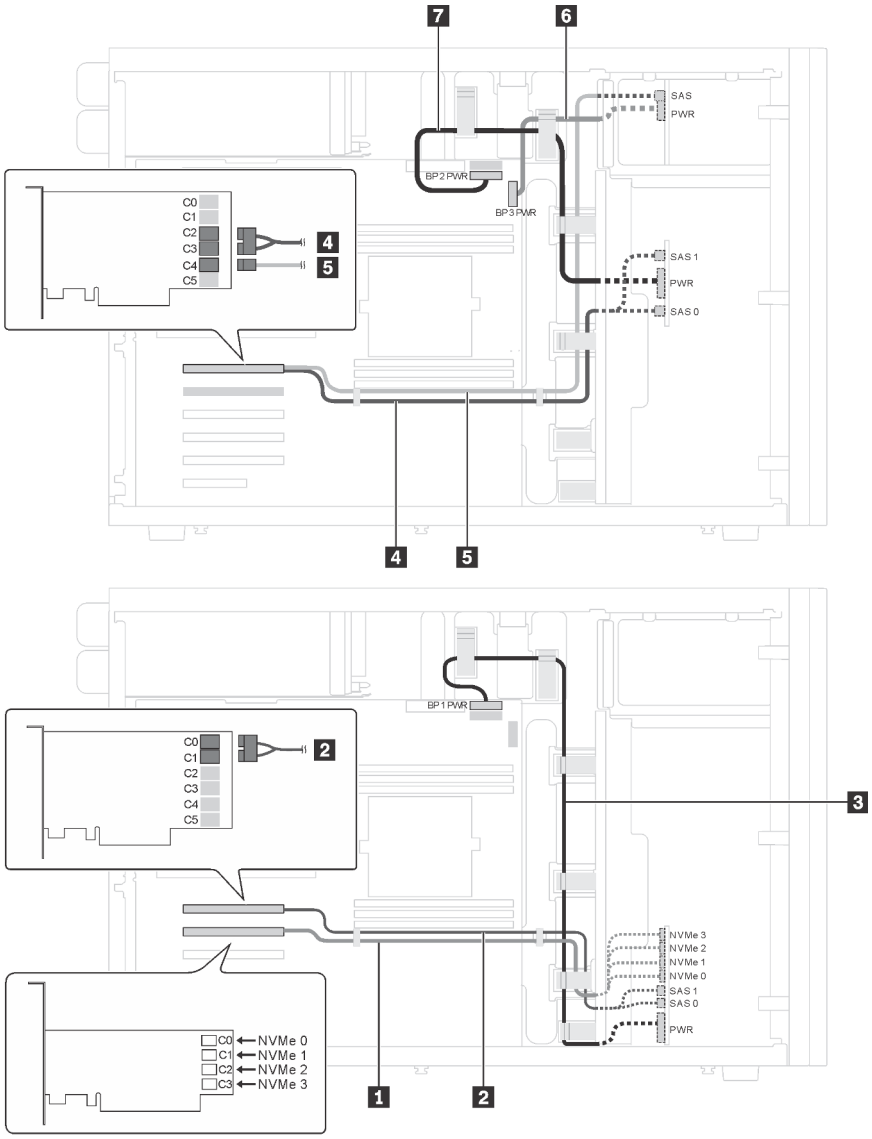

Figure 25. Cable routing for server models with sixteen 2.5-inch SAS/SATA drives, four 2.5-inch SAS/SATA/NVMe drives, one 24i RAID adapter, and one NVMe adapter

Cable	From	To
1 NVMe signal cable for backplane 1	NVMe 0, NVMe 1, NVMe 2, and NVMe 3 connectors on backplane 1	C0, C1, C2, and C3 connectors on the NVMe adapter
2 SAS signal cable for backplane 1	SAS 0 and SAS 1 connectors on backplane 1	C0 and C1 connectors on the 24i RAID adapter
3 Power cable for backplane 1	Power connector on backplane 1	Backplane 1 power connector on the system board
4 SAS signal cable for backplane 2	SAS 0 and SAS 1 connectors on backplane 2	C2 and C3 connectors on the 24i RAID adapter
5 SAS signal cable for backplane 3	SAS connector on backplane 3	C4 connector on the 24i RAID adapter

Cable	From	To
6 Power cable for backplane 3	Power connector on backplane 3	Backplane 3 power connector on the system board
7 Power cable for backplane 2	Power connector on backplane 2	Backplane 2 power connector on the system board

Server model: sixteen 2.5-inch SAS/SATA drives, four 2.5-inch SAS/SATA/NVMe drives, one 32i RAID adapter, one NVMe adapter

Notes:

- Ensure that all cables are routed through the correct cable clips.
- Broken lines indicate the hidden parts.

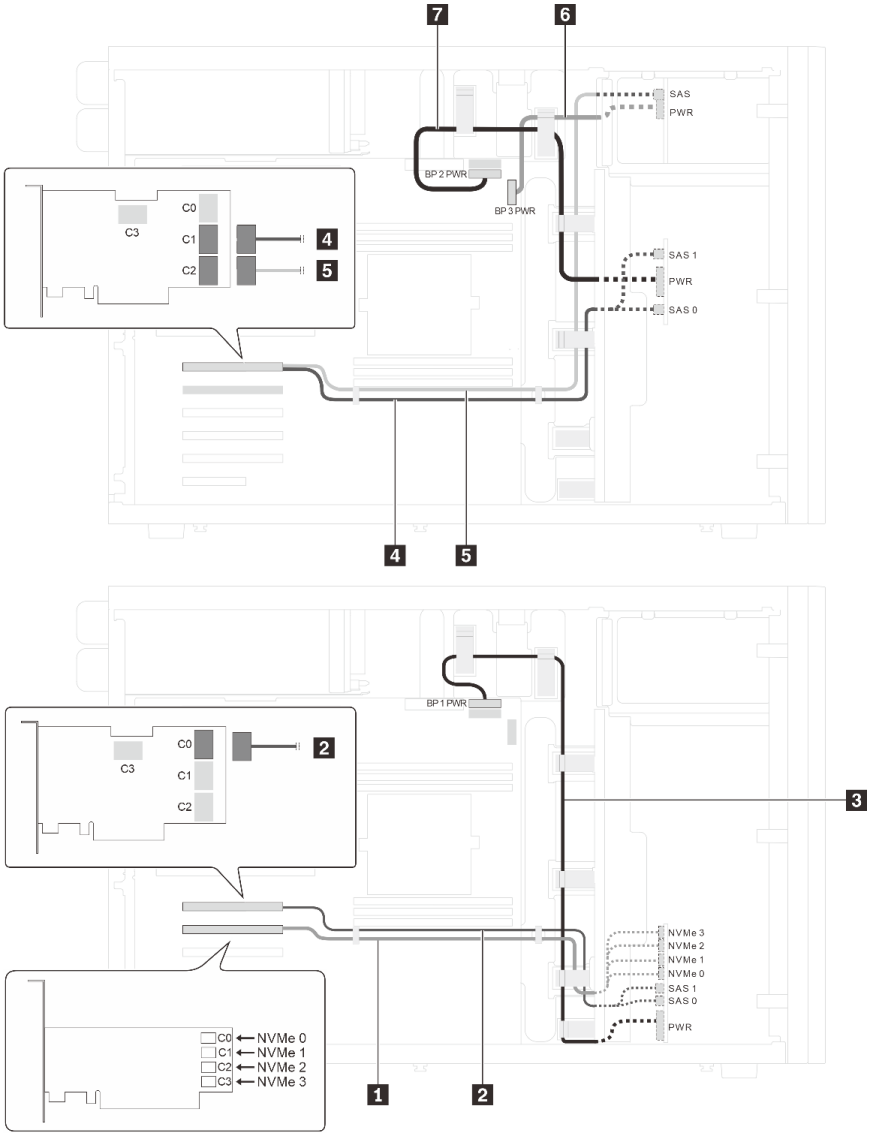

Figure 26. Cable routing for server models with sixteen 2.5-inch SAS/SATA drives, four 2.5-inch SAS/SATA/NVMe drives, one 32i RAID adapter, and one NVMe adapter

Cable	From	To
1 NVMe signal cable for backplane 1	NVMe 0, NVMe 1, NVMe 2, and NVMe 3 connectors on backplane 1	C0, C1, C2, and C3 connectors on the NVMe adapter
2 SAS signal cable for backplane 1*	SAS 0 and SAS 1 connectors on backplane 1	HBA/RAID adapter: • Gen 4: C0
3 Power cable for backplane 1	Power connector on backplane 1	Backplane 1 power connector on the system board
4 SAS signal cable for backplane 2*	SAS 0 and SAS 1 connectors on backplane 2	HBA/RAID adapter: • Gen 4: C1
5 SAS signal cable for backplane 3*	SAS connector on backplane 3	HBA/RAID adapter: • Gen 4: C2
6 Power cable for backplane 3	Power connector on backplane 3	Backplane 3 power connector on the system board
7 Power cable for backplane 2	Power connector on backplane 2	Backplane 2 power connector on the system board

Notes: *When Gen 4 HBA/RAID adapter is installed, ensure you use Gen 4 SAS signal cable:

- Cables 2 and 4: ThinkSystem ST550 2.5" SAS/SATA/AnyBay 8-Bay X40 RAID Cable Kit
- Cable 5: ThinkSystem ST550 2.5" SAS/SATA 4-Bay X40 RAID Cable Kit

Server models with eight 3.5-inch hot-swap drives

Use this section to understand the cable routing for server models with eight 3.5-inch hot-swap SAS/SATA drives.

Server model: eight 3.5-inch SAS/SATA drives, one 8i RAID adapter

Notes:

- Ensure that all cables are routed through the correct cable clips.
- Broken lines indicate the hidden parts.

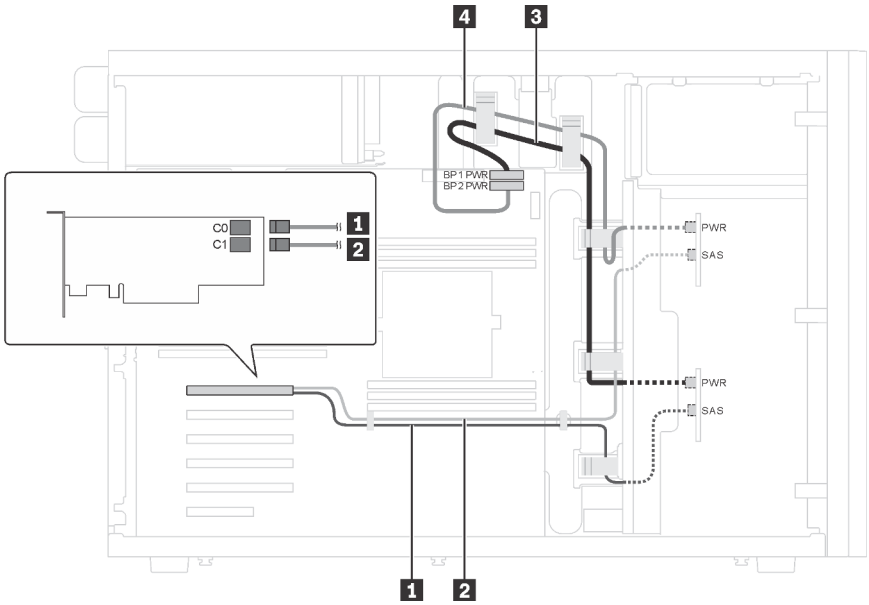

Figure 27. Cable routing for server models with eight 3.5-inch SAS/SATA drives and one 8i RAID adapter

Cable	From	To
1 SAS signal cable for backplane 1*	SAS connector on backplane 1	HBA/RAID adapter: • Gen 3: C0 • Gen 4: C0
2 SAS signal cable for backplane 2*	SAS connector on backplane 2	HBA/RAID adapter: • Gen 3: C1 • Gen 4: C0
3 Power cable for backplane 1	Power connector on backplane 1	Backplane 1 power connector on the system board
4 Power cable for backplane 2	Power connector on backplane 2	Backplane 2 power connector on the system board

Note: *When Gen 4 HBA/RAID adapter is installed, ensure you use Gen 4 SAS signal cable (ThinkSystem ST550 3.5" SAS/SATA 4-Bay X40 RAID Cable Kit). Cable 1 and cable 2 are combined into one cable for Gen 4.

Server models with eight 3.5-inch hot-swap drives and four 2.5-inch hot-swap drives

Use this section to understand the cable routing for server models with eight 3.5-inch hot-swap SAS/SATA drives and four 2.5-inch hot-swap SAS/SATA drives.

Server model: eight 3.5-inch hot-swap SAS/SATA drives, four 2.5-inch hot-swap SAS/SATA drives, two 8i RAID adapters

Notes:

- Ensure that all cables are routed through the correct cable clips.
- Broken lines indicate the hidden parts.

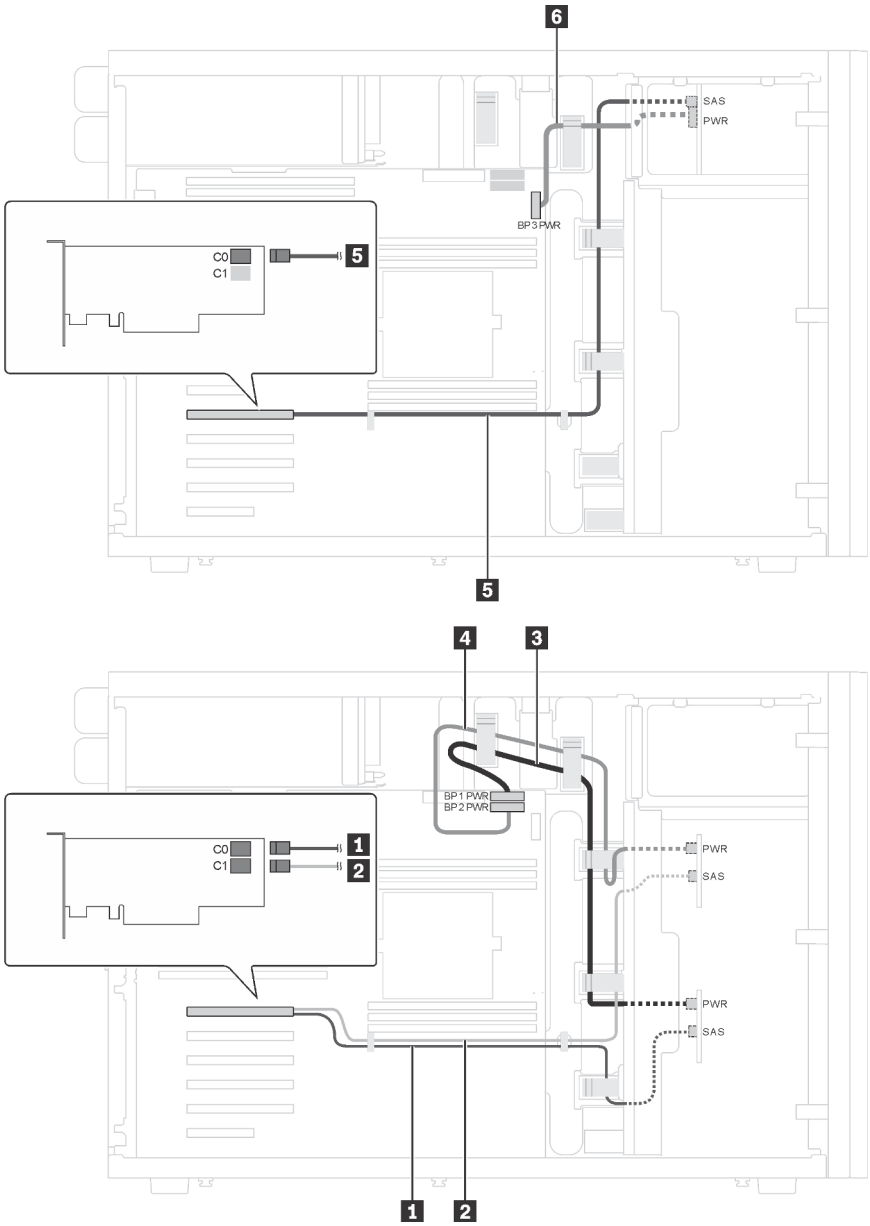

Figure 28. Cable routing for server models with eight 3.5-inch hot-swap SAS/SATA drives, four 2.5-inch hot-swap SAS/SATA drives, and two 8i RAID adapters

Cable	From	To
1 SAS signal cable for backplane 1*	SAS connector on backplane 1	HBA/RAID adapter: • Gen 3: C0 • Gen 4: C0
2 SAS signal cable for backplane 2*	SAS connector on backplane 2	HBA/RAID adapter: • Gen 3: C1 • Gen 4: C0
3 Power cable for backplane 1	Power connector on backplane 1	Backplane 1 power connector on the system board

Cable	From	To
4 Power cable for backplane 2	Power connector on backplane 2	Backplane 2 power connector on the system board
5 SAS signal cable for backplane 3*	SAS connector on backplane 3	HBA/RAID adapter: • Gen 3: C0 • Gen 4: C0
6 Power cable for backplane 3	Power connector on backplane 3	Backplane 3 power connector on the system board

Notes: *When Gen 4 HBA/RAID adapter is installed, ensure you use Gen 4 SAS signal cables:

- Cable 1 and cable 2 are combined into one cable for Gen 4 (ThinkSystem ST550 3.5" SAS/SATA 4-Bay X40 RAID Cable Kit).
- Cable 5: ThinkSystem ST550 2.5" SAS/SATA 4-Bay X40 RAID Cable Kit

Server model: eight 3.5-inch hot-swap SAS/SATA drives, four 2.5-inch hot-swap SAS/SATA drives, one 24i RAID adapter

Notes:

- Ensure that all cables are routed through the correct cable clips.
- Broken lines indicate the hidden parts.

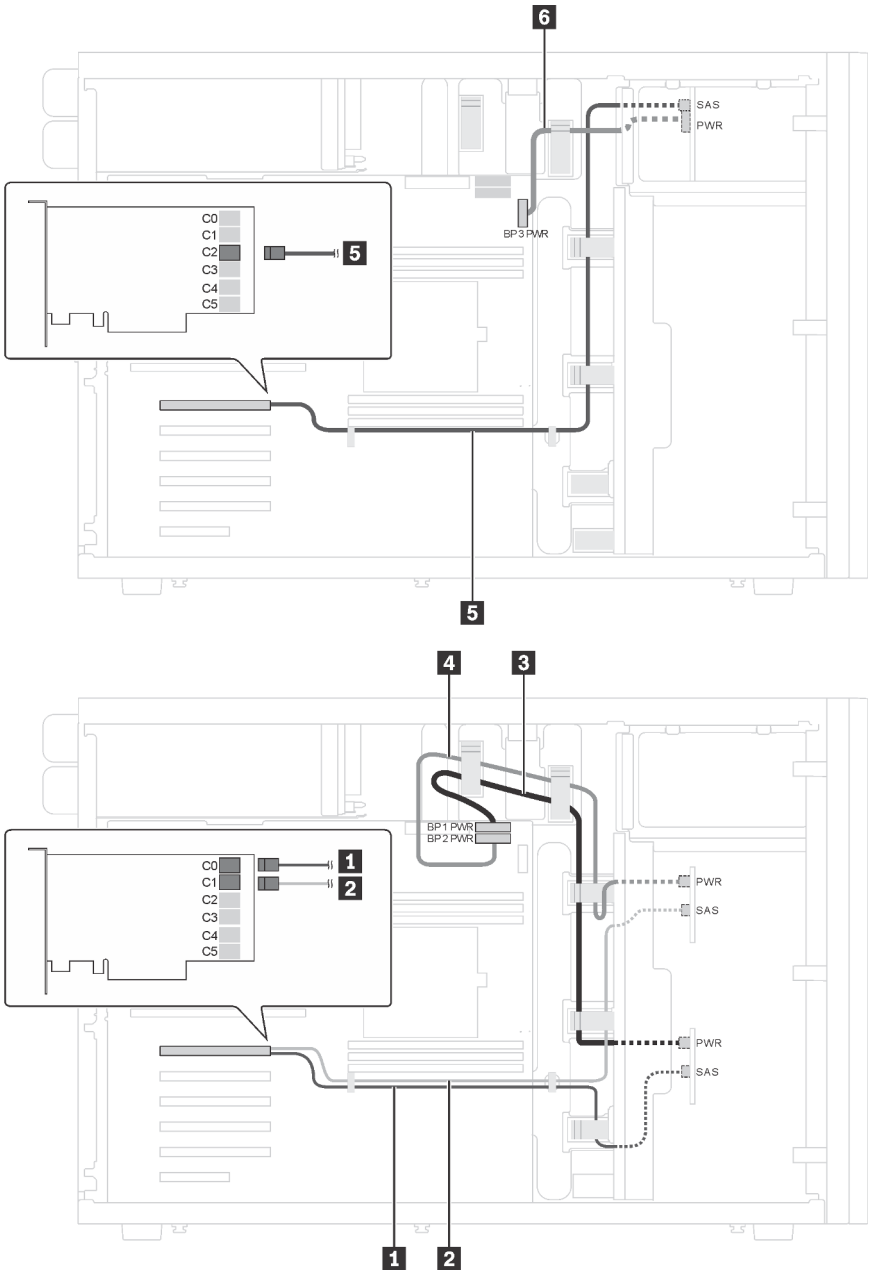

Figure 29. Cable routing for server models with eight 3.5-inch hot-swap SAS/SATA drives, four 2.5-inch hot-swap SAS/SATA drives, and one 24i RAID adapter

Cable	From	To
1 SAS signal cable for backplane 1	SAS connector on backplane 1	C0 connector on the 24i RAID adapter
2 SAS signal cable for backplane 2	SAS connector on backplane 2	C1 connector on the 24i RAID adapter
3 Power cable for backplane 1	Power connector on backplane 1	Backplane 1 power connector on the system board
4 Power cable for backplane 2	Power connector on backplane 2	Backplane 2 power connector on the system board

Cable	From	To
5 SAS signal cable for backplane 3	SAS connector on backplane 3	C2 connector on the 24i RAID adapter
6 Power cable for backplane 3	Power connector on backplane 3	Backplane 3 power connector on the system board

Server model: eight 3.5-inch hot-swap SAS/SATA drives, four 2.5-inch hot-swap SAS/SATA drives, one 32i RAID adapter

Notes:

- Ensure that all cables are routed through the correct cable clips.
- Broken lines indicate the hidden parts.

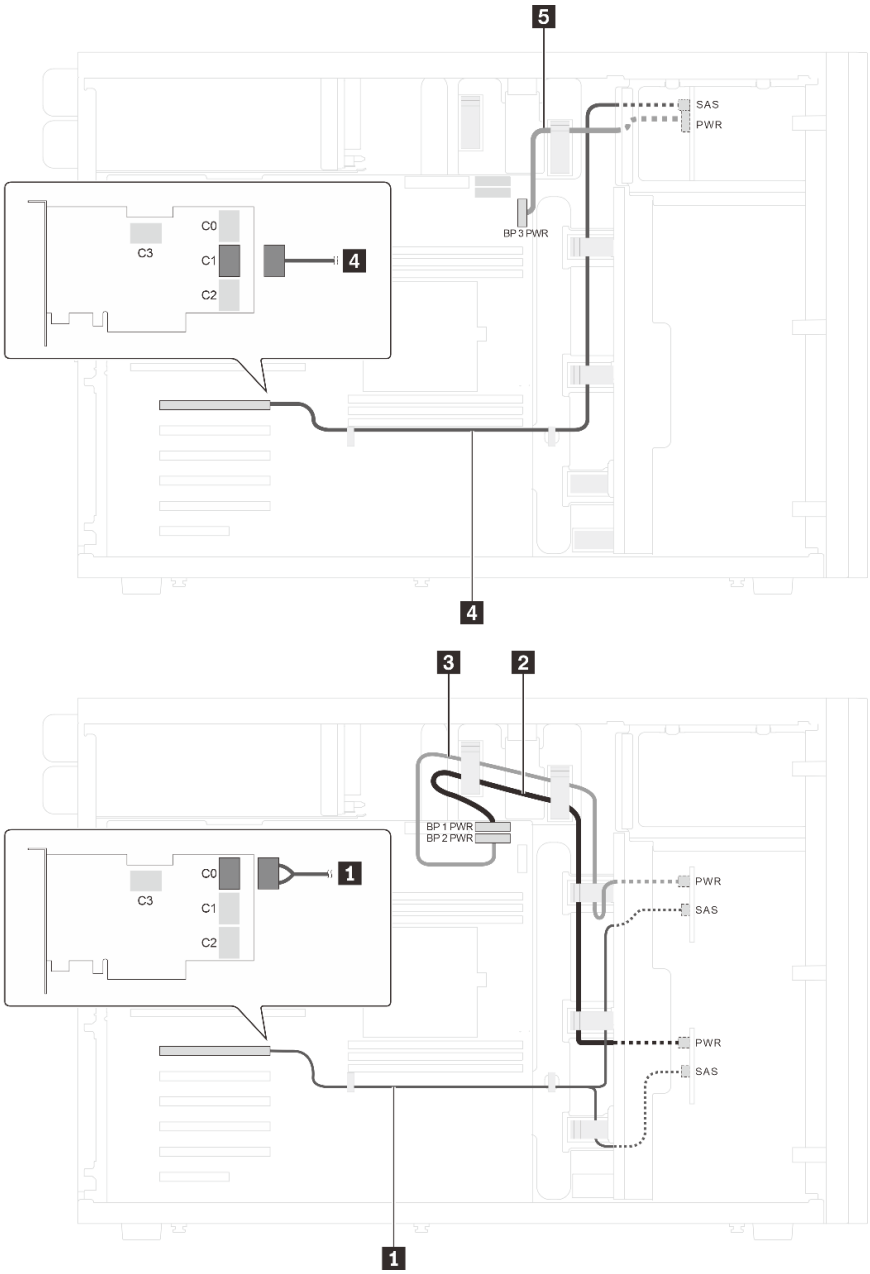

Figure 30. Cable routing for server models with eight 3.5-inch hot-swap SAS/SATA drives, four 2.5-inch hot-swap SAS/SATA drives, and one 32i RAID adapter

Cable	From	To
1 SAS signal cable for backplane 1 and 2*	SAS connectors on backplane 1 and 2	C0 connector on the 32i RAID adapter (Gen 4)
2 Power cable for backplane 1	Power connector on backplane 1	Backplane 1 power connector on the system board
3 Power cable for backplane 2	Power connector on backplane 2	Backplane 2 power connector on the system board

Cable	From	To
4 SAS signal cable for backplane 3*	SAS connector on backplane 3	C1 connector on the 32i RAID adapter (Gen 4)
5 Power cable for backplane 3	Power connector on backplane 3	Backplane 3 power connector on the system board

Notes: *When Gen 4 HBA/RAID adapter is installed, ensure you use Gen 4 SAS signal cables:

- Cable 1: ThinkSystem ST550 3.5" SAS/SATA 4-Bay X40 RAID Cable Kit
- Cable 4: ThinkSystem ST550 2.5" SAS/SATA 4-Bay X40 RAID Cable Kit

Parts list

Use the parts list to identify each of the components that are available for your server.

For more information about ordering the parts shown in Figure 31 “Server components” on page 60:

http://datacentersupport.lenovo.com/us/en/products/servers/thinksystem/st550/7x09/parts

Note: Depending on the model, your server might look slightly different from the illustration.

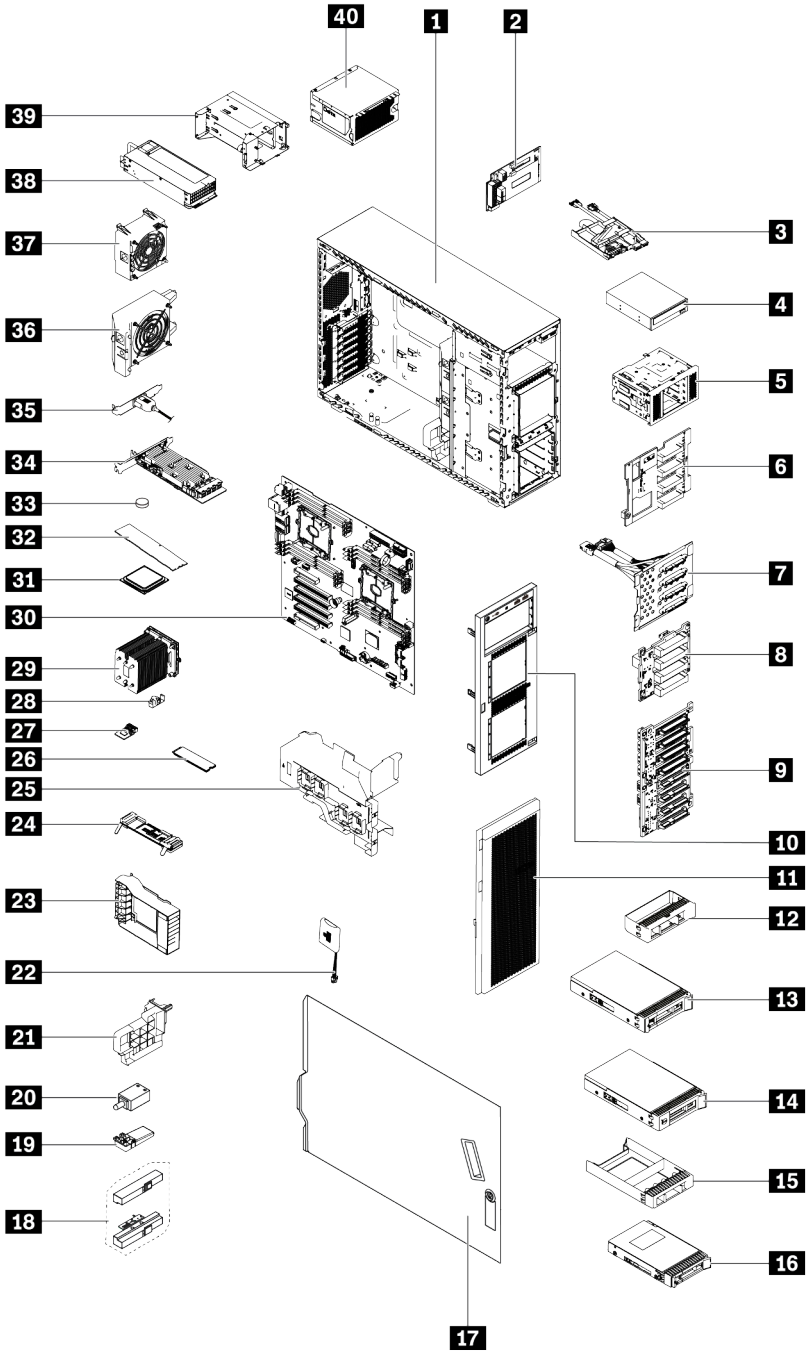

Figure 31. Server components

The parts listed in the following table are identified as one of the following:

- **Tier 1 customer replaceable unit (CRU):** Replacement of Tier 1 CRUs is your responsibility. If Lenovo installs a Tier 1 CRU at your request with no service agreement, you will be charged for the installation.
- **Tier 2 customer replaceable unit:** You may install a Tier 2 CRU yourself or request Lenovo to install it, at no additional charge, under the type of warranty service that is designated for your server.
- **Field replaceable unit (FRU):** FRUs must be installed only by trained service technicians.

- **Consumable and Structural parts:** Purchase and replacement of consumable and structural parts is your responsibility. If Lenovo acquires or installs a structural component at your request, you will be charged for the service.

Table 9. Parts listing

Index	Description	Tier 1 CRU	Tier 2 CRU	FRU	Consumable and Structural parts
For more information about ordering the parts shown in Figure 31 "Server components" on page 60: http://datacentersupport.lenovo.com/us/en/products/servers/thinksystem/st550/7x09/parts					
1	Chassis			√	
2	Power interface board	√			
3	Front panel		√		
4	Optical drive / tape drive	√			
5	Expansion drive cage				√
6	Backplane, four 3.5-inch hot-swap drives	√			
7	Backplate, four 3.5-inch simple-swap drives	√			
8	Backplane, four 2.5-inch hot-swap drives	√			
9	Backplane, eight 2.5-inch hot-swap drives	√			
10	Front bezel				√
11	Front door				√
12	Filler, 3.5-inch storage drive				√
13	Storage drive, 3.5-inch, hot-swap	√			
14	Storage drive, 3.5-inch, simple-swap	√			
15	Filler, 2.5-inch storage drive				√
16	Storage drive, 2.5-inch, hot-swap	√			
17	Server cover				√
18	Rack latches				√
19	Foot stand				√
20	Intrusion switch	√			
21	PCIe adapter holder				√
22	RAID super capacitor module	√			
23	PCIe adapter retainer				√
24	M.2 backplane	√			
25	Air baffle				√

Table 9. Parts listing (continued)

Index	Description	Tier 1 CRU	Tier 2 CRU	FRU	Consumable and Structural parts
26	M.2 drive	√			
27	TCM/TPM adapter (only available in Chinese Mainland)			√	
28	M.2 retainer clip	√			
29	Heat sink			√	
30	System board			√	
31	CPU			√	
32	DIMM	√			
33	CMOS battery (CR2032)				√
34	PCIe adapter	√			
35	Serial port module	√			
36	Front fan	√			
37	Rear fan	√			
38	Hot-swap power supply	√			
39	Hot-swap power supply cage				√
40	Fixed power supply	√			

Power cords

Several power cords are available, depending on the country and region where the server is installed.

To view the power cords that are available for the server:

1. Go to:

   http://dcsc.lenovo.com/#/
2. Click **Preconfigured Model** or **Configure to order**.
3. Enter the machine type and model for your server to display the configurator page.
4. Click **Power → Power Cables** to see all line cords.

Notes:

- For your safety, a power cord with a grounded attachment plug is provided to use with this product. To avoid electrical shock, always use the power cord and plug with a properly grounded outlet.
- Power cords for this product that are used in the United States and Canada are listed by Underwriter's Laboratories (UL) and certified by the Canadian Standards Association (CSA).
- For units intended to be operated at 115 volts: Use a UL-listed and CSA-certified cord set consisting of a minimum 18 AWG, Type SVT or SJT, three-conductor cord, a maximum of 15 feet in length and a parallel blade, grounding-type attachment plug rated 15 amperes, 125 volts.
- For units intended to be operated at 230 volts (U.S. use): Use a UL-listed and CSA-certified cord set consisting of a minimum 18 AWG, Type SVT or SJT, three-conductor cord, a maximum of 15 feet in length and a tandem blade, grounding-type attachment plug rated 15 amperes, 250 volts.
- For units intended to be operated at 230 volts (outside the U.S.): Use a cord set with a grounding-type attachment plug. The cord set should have the appropriate safety approvals for the country in which the equipment will be installed.
- Power cords for a specific country or region are usually available only in that country or region.

Chapter 3. Server hardware setup

To set up the server, install any options that have been purchased, cable the server, configure and update the firmware, and install the operating system.

Server setup checklist

Use the server setup checklist to ensure that you have performed all tasks that are required to set up your server.

The server setup procedure varies depending on the configuration of the server when it was delivered. In some cases, the server is fully configured and you just need to connect the server to the network and an ac power source, and then you can power on the server. In other cases, the server needs to have hardware options installed, requires hardware and firmware configuration, and requires an operating system to be installed.

The following steps describe the general procedure for setting up a server:

1. Unpack the server package. See "Server package contents" on page 2.
2. Set up the server hardware.
   a. Install any required hardware or server options. See the related topics in "Install server hardware options" on page 69.
   b. If necessary, install the server into a standard rack cabinet by using the tower-to-rack conversion kit. See the documentation that comes with the optional conversion kit.
   c. Connect the Ethernet cables and power cords to the server. See "Rear view" on page 25 to locate the connectors. See "Cable the server" on page 116 for cabling best practices.
   d. Power on the server. See "Power on the server" on page 116.

      Note: You can access the management processor interface to configure the system without powering on the server. Whenever the server is connected to power, the management processor interface is available. For details about accessing the management server processor, see:

      https://pubs.lenovo.com/xcc/dw1lm_c_chapter2_openingandusing
   e. Validate that the server hardware was set up successfully. See "Validate server setup" on page 117.
3. Configure the system.
   a. Connect the Lenovo XClarity Controller to the management network. See "Set the network connection for the Lenovo XClarity Controller" on page 119.
   b. Update the firmware for the server, if necessary. See "Update the firmware" on page 120.
   c. Configure the firmware for the server. See "Configure the firmware" on page 123.

      The following information is available for RAID configuration:

      - https://lenovopress.com/lp0578-lenovo-raid-introduction
      - https://lenovopress.com/lp0579-lenovo-raid-management-tools-and-resources
   d. Install the operating system. See "Deploy the operating system" on page 125.
   e. Back up the server configuration. See "Back up the server configuration" on page 125.
   f. Install the applications and programs for which the server is intended to be used.

© Copyright Lenovo 2017, 2025

Installation Guidelines

Use the installation guidelines to install components in your server.

Before installing optional devices, read the following notices carefully:

Attention: Prevent exposure to static electricity, which might lead to system halt and loss of data, by keeping static-sensitive components in their static-protective packages until installation, and handling these devices with an electrostatic-discharge wrist strap or other grounding system.

- Read the safety information and guidelines to ensure that you work safely.
  - A complete list of safety information for all products is available at: https://pubs.lenovo.com/safety_documentation/
  - "Handling static-sensitive devices" on page 68
- Make sure the components you are installing are supported by the server. For a list of supported optional components for the server, see https://serverproven.lenovo.com/.
- When you install a new server, download and apply the latest firmware. This will help ensure that any known issues are addressed, and that your server is ready to work with optimal performance. Go to ThinkSystem ST550 Drivers and Software to download firmware updates for your server.

  Important: Some cluster solutions require specific code levels or coordinated code updates. If the component is part of a cluster solution, verify that the latest level of code is supported for the cluster solution before you update the code.
- It is good practice to make sure that the server is working correctly before you install an optional component.
- Keep the working area clean, and place removed components on a flat and smooth surface that does not shake or tilt.
- Do not attempt to lift an object that might be too heavy for you. If you have to lift a heavy object, read the following precautions carefully:
  - Make sure that you can stand steadily without slipping.
  - Distribute the weight of the object equally between your feet.
  - Use a slow lifting force. Never move suddenly or twist when you lift a heavy object.
  - To avoid straining the muscles in your back, lift by standing or by pushing up with your leg muscles.
- Make sure that you have an adequate number of properly grounded electrical outlets for the server, monitor, and other devices.
- Back up all important data before you make changes related to the disk drives.
- Have a small flat-blade screwdriver, a small Phillips screwdriver, and a T8 torx screwdriver available.
- You do not have to turn off the server to remove or install hot-swap power supplies or hot-plug USB devices. However, you must turn off the server before you perform any steps that involve removing or installing adapter cables, and you must disconnect the power source from the server before you perform any steps that involve removing or installing a DIMM.
- Blue on a component indicates touch points, where you can grip to remove a component from or install it in the server, open or close a latch, and so on.
- Orange on a component or an orange label on or near a component indicates that the component can be hot-swapped if the server and operating system support hot-swap capability, which means that you can remove or install the component while the server is still running. (Orange can also indicate touch points on hot-swap components.) See the instructions for removing or installing a specific hot-swap component for any additional procedures that you might have to perform before you remove or install the component.

- The Red strip on the drives, adjacent to the release latch, indicates that the drive can be hot-swapped if the server and operating system support hot-swap capability. This means that you can remove or install the drive while the server is still running.

  Note: See the system specific instructions for removing or installing a hot-swap drive for any additional procedures that you might need to perform before you remove or install the drive.
- After finishing working on the server, make sure you reinstall all safety shields, guards, labels, and ground wires.

Safety inspection checklist

Use the information in this section to identify potentially unsafe conditions with your server. As each machine was designed and built, required safety items were installed to protect users and service technicians from injury.

Notes:

1. The product is not suitable for use at visual display workplaces according to §2 of the Workplace Regulations.
2. The set-up of the server is made in the server room only.

CAUTION:
This equipment must be installed or serviced by trained personnel, as defined by the NEC, IEC 62368-1 & IEC 60950-1, the standard for Safety of Electronic Equipment within the Field of Audio/Video, Information Technology and Communication Technology. Lenovo assumes you are qualified in the servicing of equipment and trained in recognizing hazards energy levels in products. Access to the equipment is by the use of a tool, lock and key, or other means of security, and is controlled by the authority responsible for the location.

Important: Electrical grounding of the server is required for operator safety and correct system function. Proper grounding of the electrical outlet can be verified by a certified electrician.

Use the following checklist to verify that there are no potentially unsafe conditions:

1. Make sure that the power is off and the power cord is disconnected.
2. Check the power cord.
   - Make sure that the third-wire ground connector is in good condition. Use a meter to measure third-wire ground continuity for 0.1 ohm or less between the external ground pin and the frame ground.
   - Make sure that the power cord is the correct type.

     To view the power cords that are available for the server:

     a. Go to:

     http://dcsc.lenovo.com/#/

     b. In the Customize a Model pane:

     1) Click **Select Options/Parts for a Model**.

     2) Enter the machine type and model for your server.

     c. Click the Power tab to see all line cords.
   - Make sure that the insulation is not frayed or worn.
3. Check for any obvious non-Lenovo alterations. Use good judgment as to the safety of any non-Lenovo alterations.
4. Check inside the server for any obvious unsafe conditions, such as metal filings, contamination, water or other liquid, or signs of fire or smoke damage.

5. Check for worn, frayed, or pinched cables.
6. Make sure that the power-supply cover fasteners (screws or rivets) have not been removed or tampered with.

System reliability guidelines

The system reliability guidelines to ensure proper system cooling.

Make sure the following requirements are met:

- When the server comes with redundant power, a power supply must be installed in each power-supply bay.
- Adequate space around the server must be spared to allow server cooling system to work properly. Leave approximately 50 mm (2.0 in.) of open space around the front and rear of the server. Do not place any object in front of the fans.
- For proper cooling and airflow, refit the server cover before you turn the power on. Do not operate the server for more than 30 minutes with the server cover removed, for it might damage server components.
- Cabling instructions that come with optional components must be followed.
- A failed fan must be replaced within 48 hours since malfunction.
- A removed hot-swap drive must be replaced within two minutes after removal.
- A removed hot-swap power supply must be replaced within two minutes after removal.
- Every air baffle that comes with the server must be installed when the server starts (some servers might come with more than one air baffle). Operating the server with a missing air baffle might damage the processor.
- All processor sockets must contain either a socket cover or a processor with heat sink.
- When more than one processor is installed, fan population rules for each server must be strictly followed.

Working inside the server with the power on

Guidelines to work inside the server with the power on.

Attention: The server might stop and data loss might occur when internal server components are exposed to static electricity. To avoid this potential problem, always use an electrostatic-discharge wrist strap or other grounding systems when working inside the server with the power on.

- Avoid loose-fitting clothing, particularly around your forearms. Button or roll up long sleeves before working inside the server.
- Prevent your necktie, scarf, badge rope, or hair from dangling into the server.
- Remove jewelry, such as bracelets, necklaces, rings, cuff links, and wrist watches.
- Remove items from your shirt pocket, such as pens and pencils, in case they fall into the server as you lean over it.
- Avoid dropping any metallic objects, such as paper clips, hairpins, and screws, into the server.

Handling static-sensitive devices

Use this information to handle static-sensitive devices.

Attention: Prevent exposure to static electricity, which might lead to system halt and loss of data, by keeping static-sensitive components in their static-protective packages until installation, and handling these devices with an electrostatic-discharge wrist strap or other grounding system.

- Limit your movement to prevent building up static electricity around you.

- Take additional care when handling devices during cold weather, for heating would reduce indoor humidity and increase static electricity.
- Always use an electrostatic-discharge wrist strap or other grounding system.
- While the device is still in its static-protective package, touch it to an unpainted metal surface on the outside of the server for at least two seconds. This drains static electricity from the package and from your body.
- Remove the device from the package and install it directly into the server without putting it down. If it is necessary to put the device down, put it back into the static-protective package. Never place the device on the server or on any metal surface.
- When handling a device, carefully hold it by the edges or the frame.
- Do not touch solder joints, pins, or exposed circuitry.
- Keep the device from others' reach to prevent possible damages.

Install server hardware options

This section has instructions for performing initial installation of optional hardware. Each component installation procedure references any tasks that need to be performed to gain access to the component being replaced.

Installation procedures are presented in the optimum sequence to minimize work.

Remove the server cover

Use this information to remove the server cover.

	"**Read** the installation Guidelines" on page 66	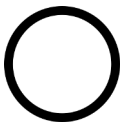 "**Power off** the server for this task" on page 117	"**ATTENTION: Static Sensitive Device** Ground package before opening" on page 68

S033

CAUTION:
Hazardous energy present. Voltages with hazardous energy might cause heating when shorted with metal, which might result in spattered metal, burns, or both.

S014

CAUTION:
Hazardous voltage, current, and energy levels might be present. Only a qualified service technician is authorized to remove the covers where the label is attached.

To remove the server cover, complete the following steps:

Watch the procedure

A video of this procedure is available at YouTube: https://www.youtube.com/playlist?list=PLYV5R7hVcs-Acsjj4tU79GzKnWG316BYn

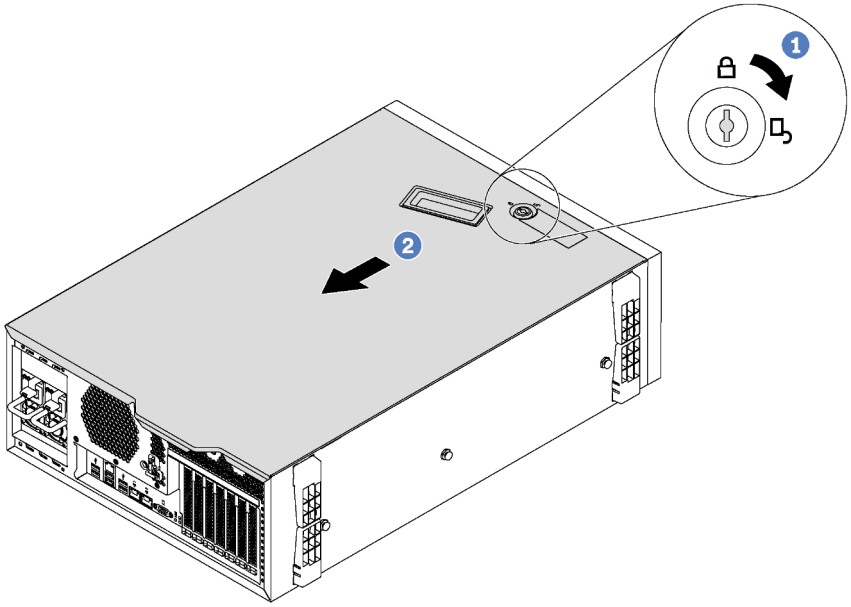

Figure 32. Server cover removal

Step 1. Use the key attached on the rear of the server to turn the cover lock to the open position.

Step 2. Slide the server cover toward the rear of the server until the server cover is disengaged from the chassis. Then, lift the server cover off the chassis and place it on a flat clean surface.

Attention: For proper cooling and airflow, install the server cover before turning on the server. Operating the server with the server cover removed might damage server components.

Remove the air baffle

If you intend to install hardware options in the server, you must first remove the air baffle from the server.

"**Read** the installation Guidelines" on page 66

"**Power off** the server for this task" on page 117

S033

CAUTION:
Hazardous energy present. Voltages with hazardous energy might cause heating when shorted with metal, which might result in spattered metal, burns, or both.

S017

CAUTION:
Hazardous moving fan blades nearby. Keep fingers and other body parts away.

Before removing the air baffle, if there is a RAID super capacitor module installed on the air baffle, disconnect the RAID super capacitor module cable first.

To remove the air baffle, complete the following step:

Watch the procedure

A video of this procedure is available at YouTube: https://www.youtube.com/playlist?list=PLYV5R7hVcs-Acsjj4tU79GzKnWG316BYn

Step 1. Lift up the front end of the air baffle until the rear end of the air baffle is disengaged from the chassis. Then, remove the air baffle out of the chassis.

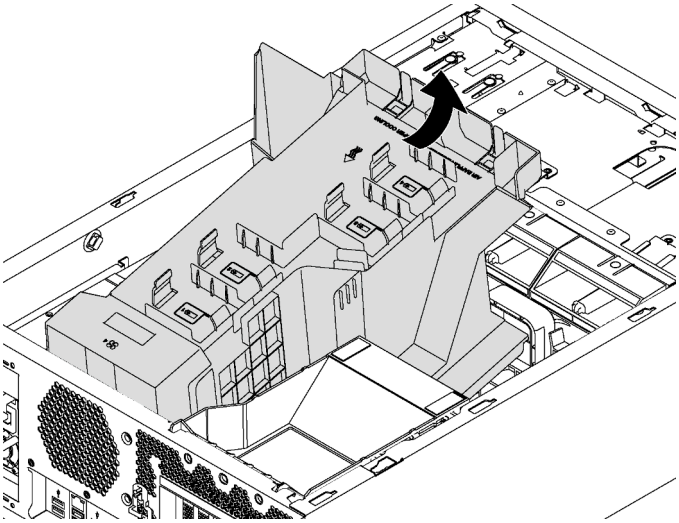

Figure 33. Air baffle removal

Attention: For proper cooling and airflow, install the air baffle before you turn on the server. Operating the server with the air baffle removed might damage server components.

Remove the PCIe adapter retainer

Use this information to remove the PCIe adapter retainer.

"**Read** the installation Guidelines" on page 66

"**Power off** the server for this task" on page 117

To remove the PCIe adapter retainer, complete the following step:

Watch the procedure

A video of this procedure is available at YouTube: https://www.youtube.com/playlist?list=PLYV5R7hVcs-Acsjj4tU79GzKnWG316BYn

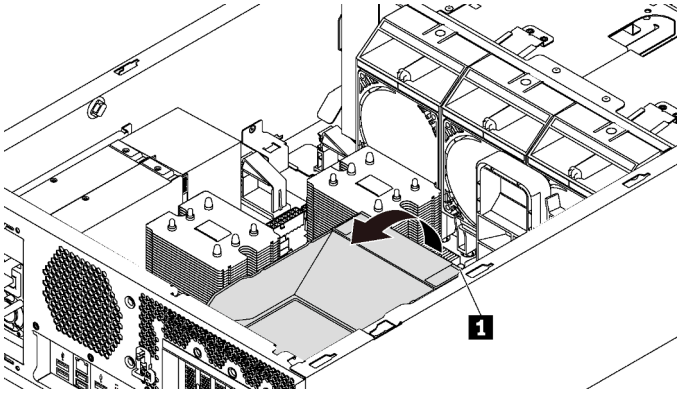

Figure 34. PCIe adapter retainer removal

Step 1. Grab the touch point 1 to lift the retainer from the chassis.

Remove the PCIe adapter holder

Use this information to remove the PCIe adapter holder.

"**Read** the installation Guidelines" on page 66

"**Power off** the server for this task" on page 117

Before removing the PCIe adapter holder, if a full-length PCIe adapter is held by the PCIe adapter holder, remove the full-length PCIe adapter first.

To remove the PCIe adapter holder, complete the following steps:

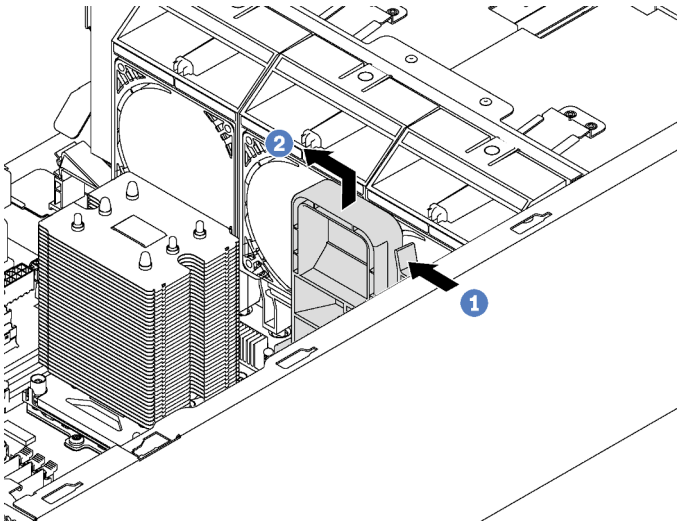

Figure 35. PCIe adapter holder removal

Step 1. Press the tab.

Step 2. Remove the PCIe adapter holder in the direction as shown.

Install a processor-heat-sink module

Processors are in the compute system boards that are accessed from the front of the server. The processor and heat sink are removed together as part of a processor-heat-sink-module (PHM) assembly. PHM installation requires a Torx T30 driver.

Note: If you are installing multiple options relating to the compute system board, the PHM installation should be performed first.

"**Read** the installation Guidelines" on page 66

"**Power off** the server for this task" on page 117

"**ATTENTION: Static Sensitive Device** Ground package before opening" on page 68

Attention:

- Each processor socket must always contain a cover or a PHM. When removing or installing a PHM, protect empty processor sockets with a cover.
- Do not touch the processor socket or processor contacts. Processor-socket contacts are very fragile and easily damaged. Contaminants on the processor contacts, such as oil from your skin, can cause connection failures.
- Remove and install only one PHM at a time. If the system board supports multiple processors, install the PHMs starting with the first processor socket.
- Do not allow the thermal grease on the processor or heat sink to come in contact with anything. Contact with any surface can compromise the thermal grease, rendering it ineffective. Thermal grease can damage components, such as electrical connectors in the processor socket. Do not remove the grease cover from a heat sink until you are instructed to do so.
- To ensure the best performance, check the manufacturing date on the new heat sink and make sure it does not exceed 2 years. Otherwise, wipe off the existing thermal grease and apply the new grease onto it for optimal thermal performance.

Notes:

- PHMs are keyed for the socket where they can be installed and for their orientation in the socket.
- See https://serverproven.lenovo.com/ for a list of processors supported for your server. All processors on the system board must have the same speed, number of cores, and frequency.
- Before you install a new PHM or replacement processor, update your system firmware to the latest level. See "Update the firmware" on page 120.
- Installing an additional PHM can change the memory requirements for your system. See "DIMM installation rules" on page 79 for a list of processor-to-memory relationships.
- Optional devices available for your system might have specific processor requirements. See the documentation that comes with the optional device for information.

Before installing a PHM, replace the processor retainer of the replacement processor.

Note: Replacement processors come with both rectangular and square processor retainers. A rectangular retainer comes attached to the processor. You must remove the rectangular retainer and replace it with a square retainer. The rectangular retainer can be discarded.

1. Remove the rectangular processor retainer.

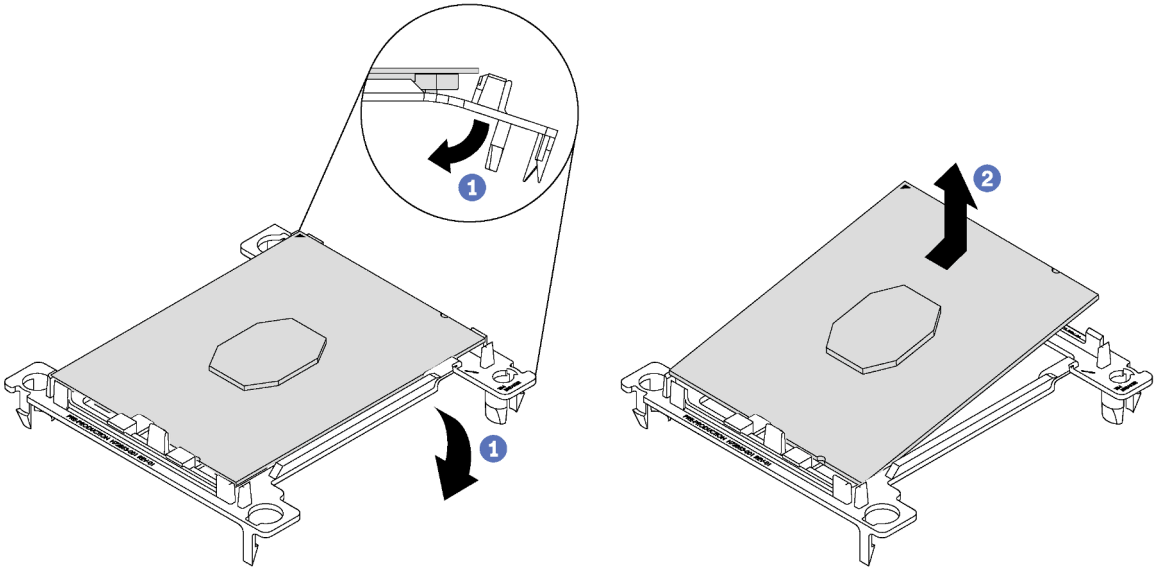

Figure 36. Removing a processor retainer

Note: When the processor is out of its retainer, hold the processor by the long edges to prevent touching the contacts or the thermal grease, if it is applied.

With the processor-contact side up, flex the ends of the retainer down and away from the processor to release the retaining clips; then, remove the processor from the retainer. Discard the old retainer.

2. Install the square retainer.

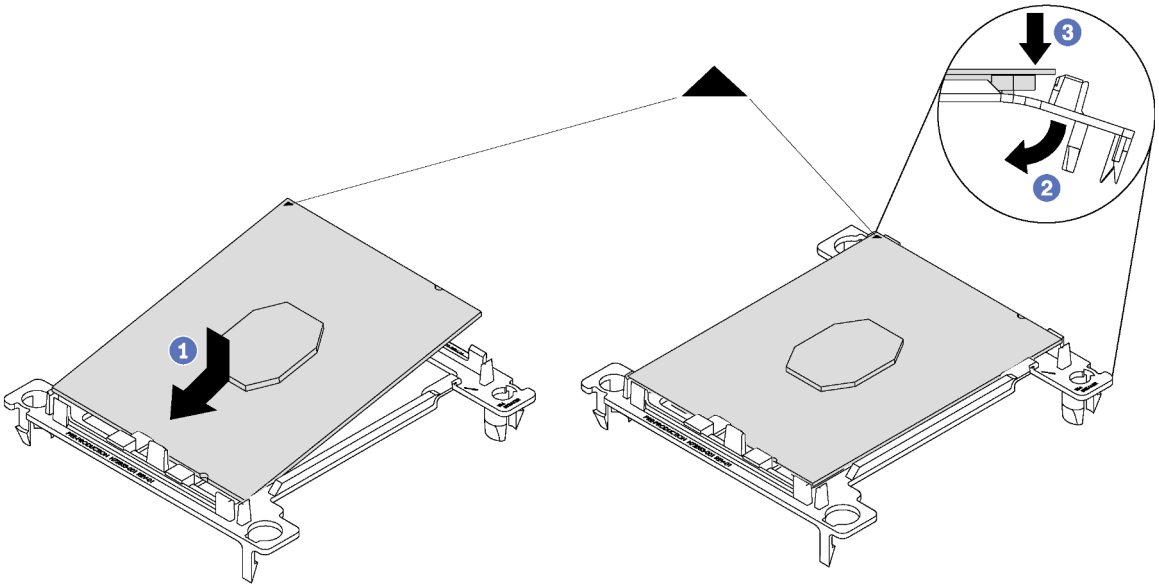

Figure 37. Installing a processor retainer

a. Position the processor on the new retainer so that the triangular marks align; then, insert the unmarked end of the processor into the retainer.

b. Holding the inserted end of the processor in place, flex the opposite end of the retainer down and away from the processor until you can press the processor under the clip on the retainer.

   To prevent the processor from falling out of the retainer after it is inserted, keep the processor-contact side up and hold the processor-retainer assembly by the sides of the retainer.

c. If there is any old thermal grease on the processor, gently clean the top of the processor using an alcohol cleaning pad.

To install a PHM, complete the following steps:

Watch the procedure

A video of this procedure is available at YouTube: https://www.youtube.com/playlist?list=PLYV5R7hVcs-Acsjj4tU79GzKnWG316BYn

Step 1. Remove the processor socket cover, if one is installed on the processor socket, by placing your fingers in the half-circles at each end of the cover and lifting it from the system board.

Step 2. Install the processor-heat-sink module on the system board.

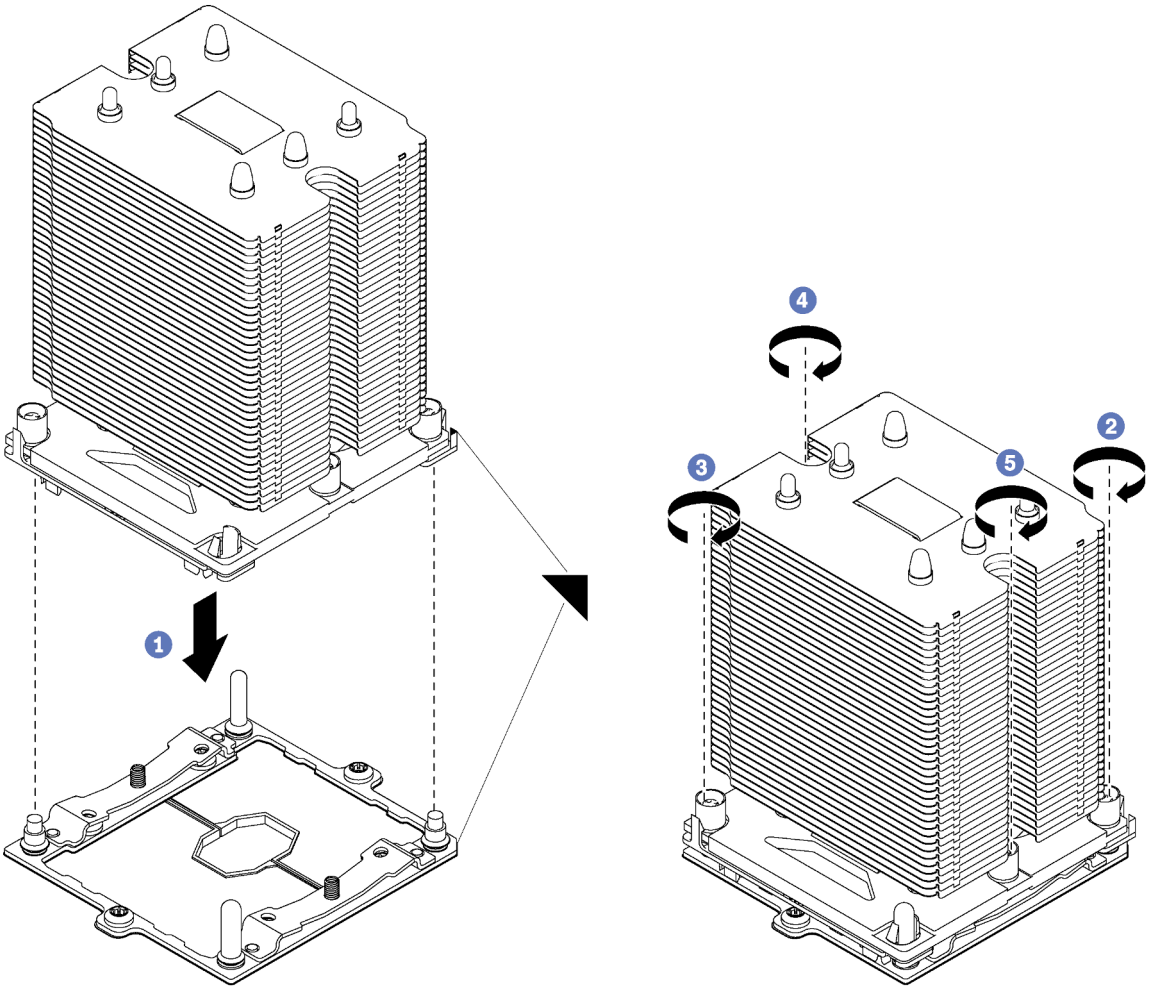

Figure 38. Installing a PHM

a. Align the triangular marks and guide pins on the processor socket with the PHM; then, insert the PHM into the processor socket.

   Attention: To prevent damage to components, make sure that you follow the indicated tightening sequence.

b. Fully tighten the Torx T30 captive fasteners *in the installation sequence shown* on the heat-sink label. Tighten the screws until they stop; then, visually inspect to make sure that there is no gap between the screw shoulder beneath the heat sink and the microprocessor socket. (For reference, the torque required for the nuts to fully tighten is 1.4 — 1.6 newton-meters, 12 — 14 inch-pounds).

After installing the PHM:

1. If you are installing the second PHM, remove the fan filler and install the new system fan that comes with the processor option kit. See "Install a front fan" on page 103.
2. If there are DIMMs to install, install them. See "Install a DIMM" on page 78.

Install a DIMM

Use this information to install a DIMM.

	"**Read** the installation Guidelines" on page 66	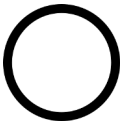 "**Power off** the server for this task" on page 117	"**ATTENTION: Static Sensitive Device** Ground package before opening" on page 68

Attention: DIMMs are sensitive to static discharge and require special handling. In addition to the standard guidelines for Handling static-sensitive devices:

- Always wear an electrostatic-discharge strap when removing or installing DIMMs. Electrostatic-discharge gloves can also be used.
- Never hold two or more DIMMs together so that they touch. Do not stack DIMMs directly on top of each other during storage.
- Never touch the gold DIMM connector contacts or allow these contacts to touch the outside of the DIMM connector housing.
- Handle DIMMs with care: never bend, twist, or drop a DIMM.

Before installing a DIMM:

1. Touch the static-protective package that contains the new DIMM to any unpainted surface on the outside of the server. Then, take the new DIMM out of the package and place it on a static-protective surface.
2. Ensure that you consider and follow the DIMM installation rules when performing the operation. See "DIMM installation rules" on page 79.

To install a DIMM, complete the following steps:

Watch the procedure

A video of this procedure is available at YouTube: https://www.youtube.com/playlist?list=PLYV5R7hVcs-Acsjj4tU79GzKnWG316BYn

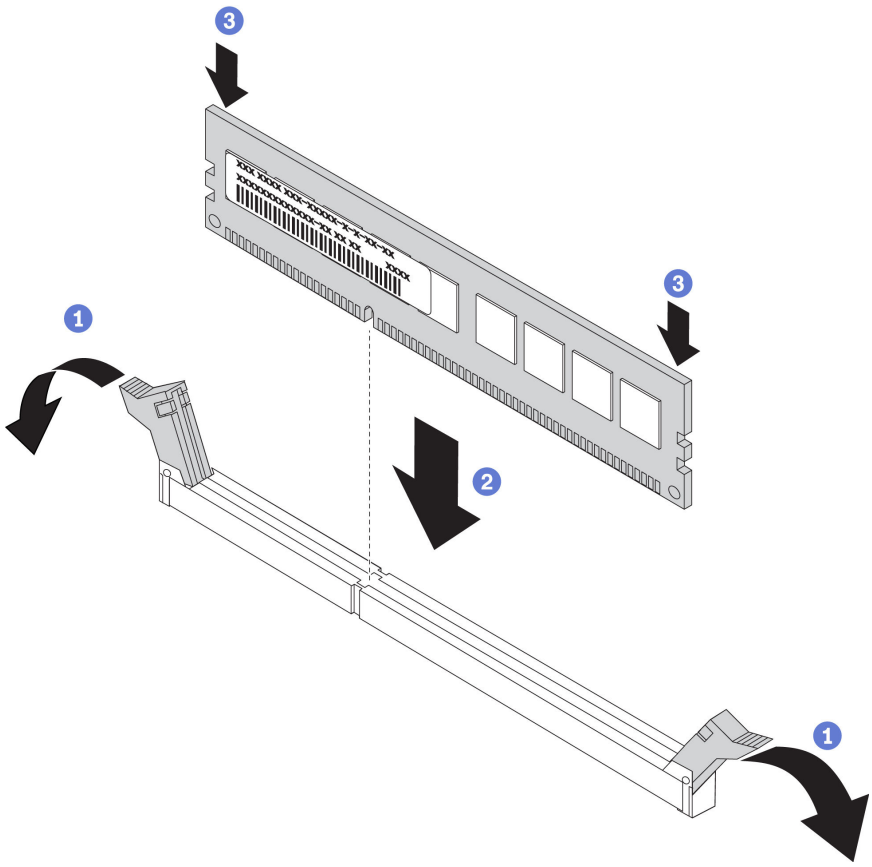

Figure 39. DIMM installation

Step 1. Open the retaining clips on each end of the DIMM slot. Then, install the DIMM into the slot.

Attention: To avoid breaking the retaining clips or damaging the DIMM slots, open and close the clips gently.

Step 2. Firmly press the DIMM straight down into the slot by applying pressure on both ends of the DIMM simultaneously. The retaining clips snap into the locked position when the DIMM is firmly seated in the slot.

Note: If there is a gap between the DIMM and the retaining clips, the DIMM has not been correctly inserted; open the retaining clips, remove the DIMM, and then reinsert it.

DIMM installation rules

DIMMs must be installed in a specific order based on the memory configuration that you implement on your server.

Your server has 12 DIMM slots. It supports up to 6 DIMMs when one processor is installed, and up to 12 DIMMs when two processors are installed. It has the following features:

For Intel Xeon SP Gen 1 processors

- Minimum: 8 GB (one processor and one 8GB registered DIMM (RDIMM)installed)
- Maximum:
  - 384 GB using RDIMMs (two processors and twelve 32 GB registered DIMMs (RDIMMs)installed)
  - 768 GB using LRDIMMs (two processors and twelve 64 GB load-reduced DIMMs (LRDIMMs) installed)
- Type:

- TruDDR4 2666, single-rank/dual-rank, 8 GB/16 GB/32 GB registered DIMMs (RDIMMs)
- TruDDR4 2666, quad-rank, 64 GB load-reduced DIMMs (LRDIMMs)

For Intel Xeon SP Gen 2 processors

- Minimum: 8 GB (one processor and one 8GB registered DIMM (RDIMM) installed)
- Maximum: 768 GB (two processors and twelve 64 GB registered DIMMs (RDIMMs) installed)
- Type:
  - TruDDR4 2666, single-rank/dual-rank, 16 GB/32 GB registered DIMMs (RDIMMs)
  - TruDDR4 2933, single-rank/dual-rank, 8 GB/16 GB/32 GB/64 GB registered DIMMs (RDIMMs)

For a list of supported DIMM options, see:
https://serverproven.lenovo.com/

Before installing a DIMM, ensure that all DIMMs to be installed must be the same type. Your server supports the following types of DIMMs:

- DDR4 RDIMM with ECC technology
- DDR4 LRDIMM (not supported for Intel Xeon SP Gen 2 processors) with ECC technology

The following illustration helps you to locate the DIMM slots on the system board.

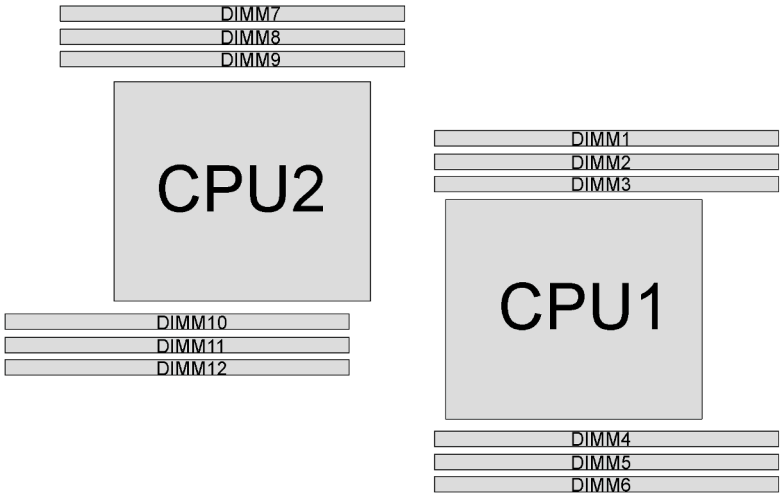

Figure 40. DIMM slots on the system board

The following memory modes are available:

- "Independent mode" on page 80
- "Mirroring mode" on page 82
- "Rank sparing mode" on page 82

Independent mode

Independent mode provides high performance memory capability. You can populate all channels with no matching requirements. Individual channels can run at different DIMM timings, but all channels must run at the same interface frequency.

Notes:

- All DIMMs to be installed must be the same type.

- When you install DIMMs with same rank and different capacity, install the DIMM that has the highest capacity first.

The following table shows the DIMM population sequence for independent mode when only one processor (CPU1) is installed.

Note: If there are three identical DIMMs to be installed for CPU1, and the three DIMMs have the same Lenovo part number, install the three DIMMs in slots 1, 2, and 3.

Table 10. Independent mode with one processor

Total DIMMs	Processor 1						Total DIMMs
	1	2	3	4	5	6	
1			3				**1**
2			3	4			**2**
3		2	3	4			**3**
4		2	3	4	5		**4**
5	1	2	3	4	5		**5**
6	1	2	3	4	5	6	**6**

The following table shows the DIMM population sequence for independent mode when two processors (CPU1 and CPU2) are installed.

Notes:

- If there are three identical DIMMs to be installed for CPU1, and the three DIMMs have the same Lenovo part number, install the three DIMMs in slots 1, 2, and 3.
- If there are three identical DIMMs to be installed for CPU2, and the three DIMMs have the same Lenovo part numbers, install the three DIMMs in slots 10, 11, and 12.

Table 11. Independent mode with two processors

Total DIMMs	Processor 1						Processor 2						Total DIMMs
	1	2	3	4	5	6	7	8	9	10	11	12	
2			3							10			**2**
3			3	4						10			**3**
4			3	4					9	10			**4**
5		2	3	4					9	10			**5**
6		2	3	4					9	10	11		**6**
7		2	3	4	5				9	10	11		**7**
8		2	3	4	5			8	9	10	11		**8**
9	1	2	3	4	5			8	9	10	11		**9**
10	1	2	3	4	5			8	9	10	11	12	**10**
11	1	2	3	4	5	6		8	9	10	11	12	**11**
12	1	2	3	4	5	6	7	8	9	10	11	12	**12**

Mirroring mode

In mirroring mode, each DIMM in a pair must be identical in size and architecture. The channels are grouped in pairs with each channel receiving the same data. One channel is used as a backup of the other, which provides redundancy.

Note: All memory modules to be installed must be the same type with the same capacity, frequency, voltage, and number of ranks.

The following table shows the DIMM population sequence for mirroring mode when only one processor (CPU1) is installed.

Table 12. Mirroring mode with one processor

Total DIMMs	Processor 1						Total DIMMs
	1	2	3	4	5	6	
2		2	3				**2**
3	1	2	3				**3**
4		2	3	4	5		**4**
6	1	2	3	4	5	6	**6**

The following table shows the DIMM population sequence for mirroring mode when two processors (CPU1 and CPU2) are installed.

Table 13. Mirroring mode with two processors

Total DIMMs	Processor 1						Processor 2						Total DIMMs
	1	2	3	4	5	6	7	8	9	10	11	12	
4		2	3							10	11		**4**
5	1	2	3							10	11		**5**
6	1	2	3							10	11	12	**6**
8		2	3	4	5			8	9	10	11		**8**
9	1	2	3	4	5	6				10	11	12	**9**
10	1	2	3	4	5	6		8	9	10	11		**10**
12	1	2	3	4	5	6	7	8	9	10	11	12	**12**

Rank sparing mode

In rank sparing mode, one rank of a DIMM works as the spare rank for the other ranks on the same channel. The spare rank is not available as system memory.

Notes:

- All DIMMs to be installed must be the same type with the same capacity, frequency, voltage, and ranks.
- If the rank of installed DIMMs is one rank, rank sparing mode is not supported. If the rank of installed DIMMs is more than one rank, follow the installation rules listed in the following tables.

The following table shows the DIMM population sequence for rank sparing mode when only one processor (CPU1) is installed.

Table 14. Rank sparing mode with one processor

Total DIMMs	Processor 1						Total DIMMs
	1	2	3	4	5	6	
1			3				**1**
2			3	4			**2**
3		2	3	4			**3**
4		2	3	4	5		**4**
5	1	2	3	4	5		**5**
6	1	2	3	4	5	6	**6**

The following table shows the DIMM population sequence for rank sparing mode when two processors (CPU1 and CPU2) are installed.

Table 15. Rank sparing mode with two processors

Total DIMMs	Processor 1						Processor 2						Total DIMMs
	1	2	3	4	5	6	7	8	9	10	11	12	
2			3							10			**2**
3			3	4						10			**3**
4			3	4					9	10			**4**
5		2	3	4					9	10			**5**
6		2	3	4					9	10	11		**6**
7		2	3	4	5				9	10	11		**7**
8		2	3	4	5			8	9	10	11		**8**
9	1	2	3	4	5			8	9	10	11		**9**
10	1	2	3	4	5			8	9	10	11	12	**10**
11	1	2	3	4	5	6		8	9	10	11	12	**11**
12	1	2	3	4	5	6	7	8	9	10	11	12	**12**

Install an optical drive or a tape drive

Use this information to install an optical drive or a tape drive.

"**Read** the installation Guidelines" on page 66

"**Power off** the server for this task" on page 117

"**ATTENTION: Static Sensitive Device** Ground package before opening" on page 68

S006

CAUTION:
When laser products (such as CD-ROMs, DVD drives, fiber optic devices, or transmitters) are installed, note the following:

- **Do not remove the covers. Removing the covers of the laser product could result in exposure to hazardous laser radiation. There are no serviceable parts inside the device.**
- **Use of controls or adjustments or performance of procedures other than those specified herein might result in hazardous radiation exposure.**

S007

CAUTION:
This product contains a Class 1M laser. Do not view directly with optical instruments.

S008

DANGER

Some laser products contain an embedded Class 3A or Class 3B laser diode. Note the following: Laser radiation when open. Do not stare into the beam, do not view directly with optical instruments, and avoid direct exposure to the beam.

Note: The following illustrations are based on the scenario that you install an optical drive. The procedure is similar for installing a tape drive.

Before installing an optical drive or a tape drive:

1. If the drive bay is covered by a filler, remove it first. Store the filler in case that you later remove the optical drive or the tape drive and need the filler to cover the place. To remove the filler, complete the following steps:

a. Remove the front bezel and then remove the cover of the drive bay filler from the front bezel.

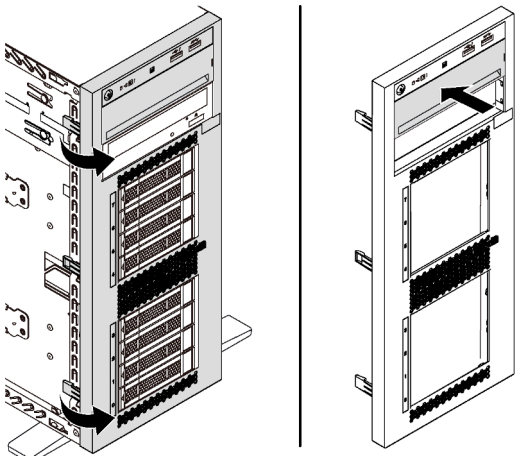

Figure 41. Drive-bay-filler cover removal

b. Remove the drive bay filler out of the chassis.

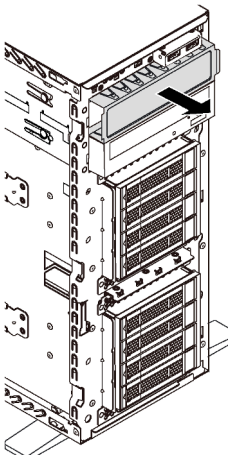

Figure 42. Drive bay filler removal

2. Touch the static-protective package that contains the new optical drive or tape drive to any unpainted surface on the outside of the server. Then, take the new optical drive or tape drive out of the package and place it on a static-protective surface.

To install an optical drive or a tape drive, complete the following steps:

Step 1. Remove the retainer from the chassis.

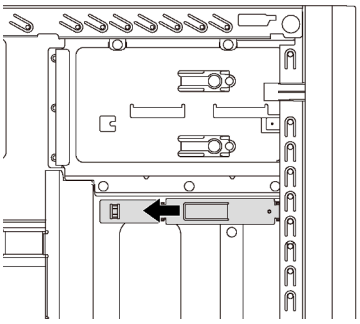

Figure 43. Drive retainer removal

Step 2. Install the retainer on only the left side of the optical drive or tape drive.

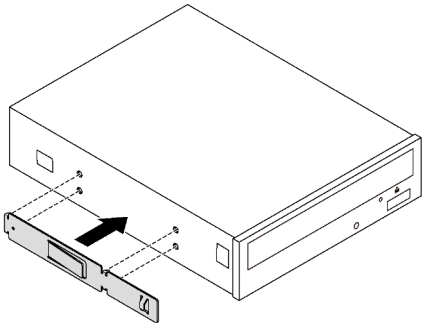

Figure 44. Optical drive retainer installation

Step 3. Hold the optical drive or tape drive in correct orientation and then slide it into the drive bay until it snaps into position.

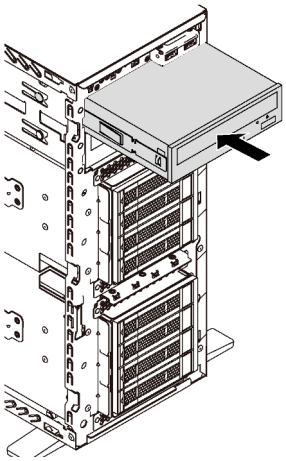

Figure 45. Optical drive installation

Step 4. Connect the power cable and the signal cable to the rear of the new optical drive or tape drive. For more information about the cable routing, see "Optical drive" on page 33 and "Tape drive" on page 34.

Install the expansion drive cage

Use this information to install the expansion drive cage.

"**Read** the installation Guidelines" on page 66

"**Power off** the server for this task" on page 117

"**ATTENTION: Static Sensitive Device** Ground package before opening" on page 68

Before installing the expansion drive cage:

1. Fan 3 is required after the expansion drive cage is installed. If your server does not come with Fan 3, purchase the front fan option before you install the expansion drive cage.

   Note: The front fan option name is ThinkSystem ST550 Front Mid Fan Module for 4x2.5" ODD Conversion.
2. If there is a filler installed in the bay, remove it. Keep the filler in a safe place for future use.
3. Touch the static-protective package that contains the new expansion drive cage to any unpainted surface on the outside of the server. Then, take the new expansion drive cage out of the package and place it on a static-protective surface.

To install the expansion drive cage, complete the following step:

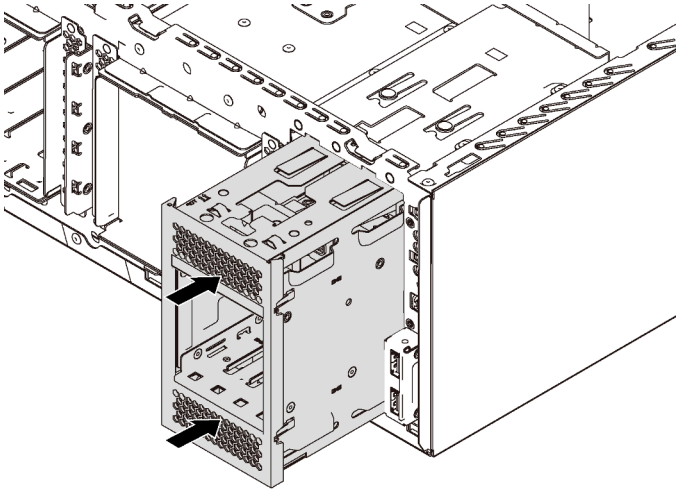

Figure 46. Expansion drive cage installation

Step 1. Slide it into the bay until it snaps into position.

After installing the expansion drive cage, ensure that:

- The signal cables are secured by the clips 1.
- The signal cables are bound correctly by the Velcro strap shipped in the package.

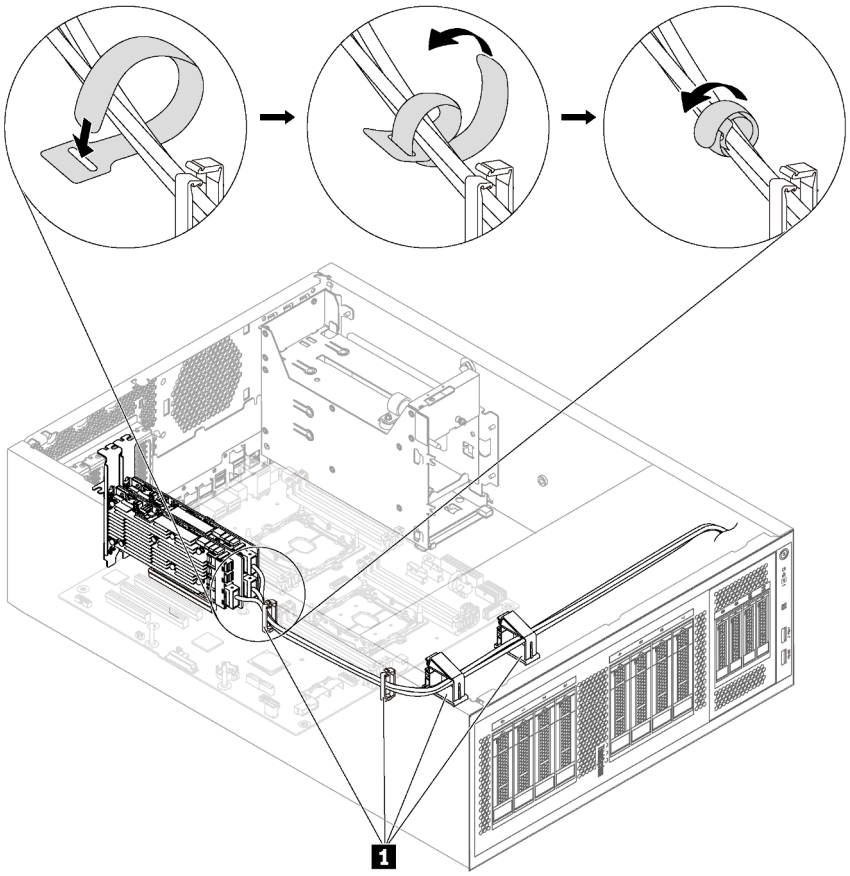

Figure 47. Securing and binding the signal cables correctly

Install a simple-swap-drive backplate

Use this information to install a simple-swap-drive backplate.

	"**Read** the installation Guidelines" on page 66	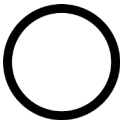 "**Power off** the server for this task" on page 117 "**ATTENTION: Static Sensitive Device** Ground package before opening" on page 68

Before installing the simple-swap-drive backplate, touch the static-protective package that contains the new backplate to any unpainted surface on the outside of the server. Then, take the new backplate out of the package and place it on a static-protective surface.

To install the simple-swap-drive backplate, complete the following steps:

Step 1. Note the orientation of the new simple-swap-drive backplate.

Step 2. Lower the new backplate into the chassis and insert the new backplate into the backplate slot. Then, carefully push the new backplate inward until it is secured by the release tab.

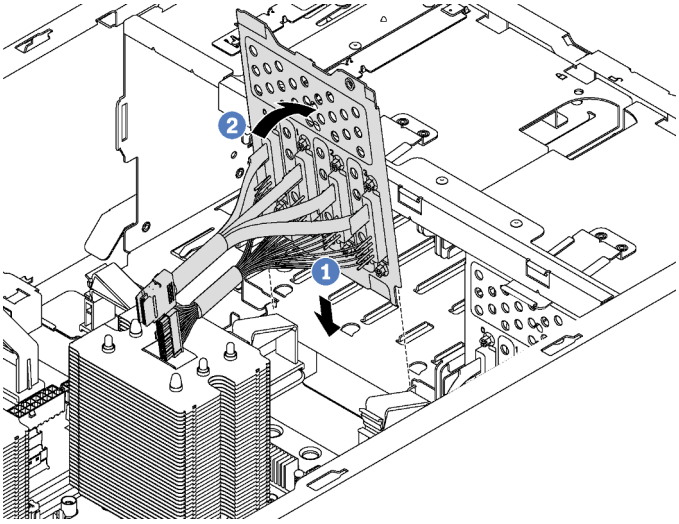

Figure 48. Simple-swap-drive backplate installation

Step 3. Connect the cables on the backplate to the system board. See "Server models with eight 3.5-inch simple-swap drives" on page 38.

Install a backplane

Use this information to install a hot-swap drive backplane.

Note: This section applies only to server models that support hot-swap-drive backplanes.

This section contains the following information:

- "Install the backplane for eight 2.5-inch hot-swap drives" on page 89
- "Install the backplane for four 3.5-inch hot-swap drives" on page 90

Install the backplane for eight 2.5-inch hot-swap drives

Use this information to install the backplane for eight 2.5-inch hot-swap drives.

	"**Read** the installation Guidelines" on page 66	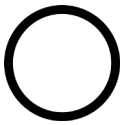 "**Power off** the server for this task" on page 117	"**ATTENTION: Static Sensitive Device** Ground package before opening" on page 68

Before installing the backplane for eight 2.5-inch hot-swap drives, touch the static-protective package that contains the new backplane to any unpainted surface on the outside of the server. Then, take the new backplane out of the package and place it on a static-protective surface.

To install the backplane for eight 2.5-inch hot-swap drives, complete the following steps:

Watch the procedure

A video of this procedure is available at YouTube: https://www.youtube.com/playlist?list=PLYV5R7hVcs-Acsjj4tU79GzKnWG316BYn

Step 1. Note the orientation of the new backplane.

Step 2. Lower the new backplane into the chassis and insert the new backplane into the backplane slot. Then, carefully rotate the top edge of the new backplane toward the drive cage until it is secured by the release tab.

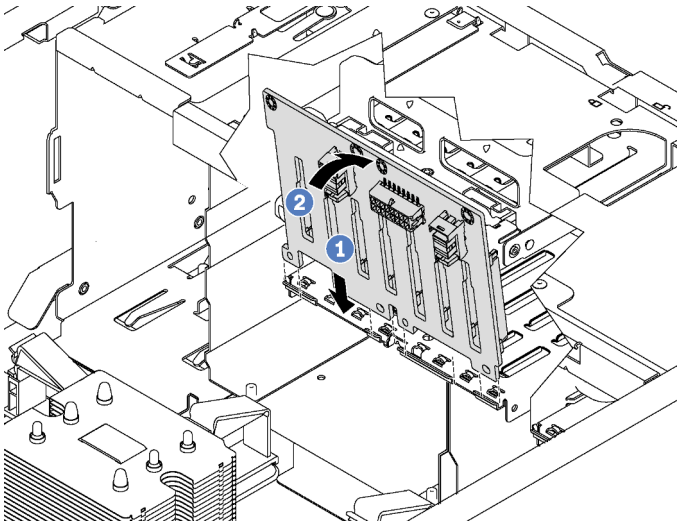

Figure 49. Installation of the backplane for eight 2.5-inch hot-swap drives

Step 3. Connect the cables to the new backplane and the system board. See "Hot-swap-drive backplane" on page 38.

Install the backplane for four 3.5-inch hot-swap drives

Use this information to install the backplane for four 3.5-inch hot-swap drives.

"**Read** the installation Guidelines" on page 66	"**Power off** the server for this task" on page 117	"**ATTENTION: Static Sensitive Device** Ground package before opening" on page 68

Before installing the backplane for four 3.5-inch hot-swap drives, touch the static-protective package that contains the new backplane to any unpainted surface on the outside of the server. Then, take the new backplane out of the package and place it on a static-protective surface.

To install the backplane for four 3.5-inch hot-swap drives, complete the following steps:

Watch the procedure

A video of this procedure is available at YouTube: https://www.youtube.com/playlist?list=PLYV5R7hVcs-Acsjj4tU79GzKnWG316BYn

Step 1. Note the orientation of the new backplane.

Step 2. Lower the new backplane into the chassis and insert the new backplane into the backplane slot. Then, carefully rotate the top edge of the new backplane toward the drive cage until it is secured by the release tab.

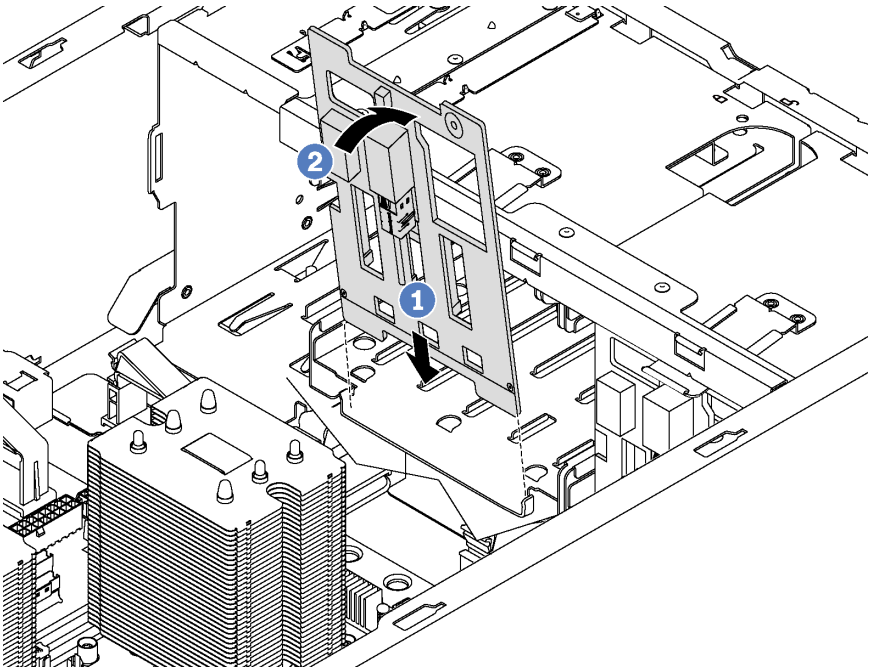

Figure 50. Installation of the backplane for four 3.5-inch hot-swap drives

Step 3. Connect the cables to the new backplane and the system board. See "Hot-swap-drive backplane" on page 38.

Install a PCIe adapter

Use this information to install a PCIe adapter.

"**Read** the installation Guidelines" on page 66	"**Power off** the server for this task" on page 117	"**ATTENTION: Static Sensitive Device** Ground package before opening" on page 68

Observe the following guidelines when select a PCIe slot:

- For server models that support NVMe drives, the NVMe adapter can be installed only in PCIe slot 2.
- For RAID adapters or host bus adapters, you can install them in either PCIe slot 1 or PCIe slot 2.
- For server models with one processor, you can install a double-width graphics adapter only in PCIe slot 3. For server models with two processors, you can install up to two double-width graphics adapters in PCIe slot 3 and PCIe slot 5. After any double-width graphics adapter is installed, PCIe slot 4 or PCIe slot 6 becomes unavailable because the space is occupied by the double-width adapter.

Notes:

- Depending on the specific type, your PCIe adapter might look different from the illustration in this topic.
- Use any documentation that comes with the PCIe adapter and follow those instructions in addition to the instructions in this topic.

Before installing a PCIe adapter:

1. If a bracket is installed in the PCIe slot, remove it. Store the bracket for the PCIe slot in case that you later remove the PCIe adapter and need the bracket to cover the place.
2. Touch the static-protective package that contains the new PCIe adapter to any unpainted surface on the outside of the server. Then, take the new PCIe adapter out of the package and place it on a static-protective surface.

To install a PCIe adapter, complete the following steps:

Watch the procedure

A video of this procedure is available at YouTube: https://www.youtube.com/playlist?list=PLYV5R7hVcs-Acsjj4tU79GzKnWG316BYn

Step 1. Locate the appropriate PCIe slot. For information about the PCIe slot, see "Specifications" on page 5.

Step 2. Position the new PCIe adapter over the PCIe slot. Then, carefully press the PCIe adapter straight down until it is securely seated in the slot.

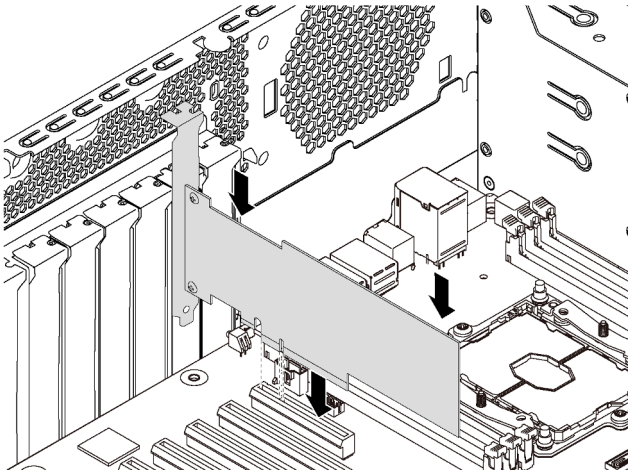

Figure 51. PCIe adapter installation

Step 3. Depending on the type of the PCIe adapter, you might need to connect any required cables. Refer to "Internal cable routing" on page 31 or the documentation that comes with the PCIe adapter for specific information.

Install the serial port module

Use this information to install the serial port module.

"**Read** the installation Guidelines" on page 66

"**Power off** the server for this task" on page 117

"**ATTENTION: Static Sensitive Device** Ground package before opening" on page 68

Before installing the serial port module:

1. If the slot is covered with a slot bracket, remove the slot bracket from the chassis. Store the bracket in case that you later remove the serial port module and need the bracket to cover the place.
2. Touch the static-protective package that contains the new serial port module to any unpainted surface on the outside of the server. Then, take the new serial port module out of the package and place it on a static-protective surface.

To install the serial port module, complete the following steps:

Step 1. Insert the serial port module into the dedicated slot.

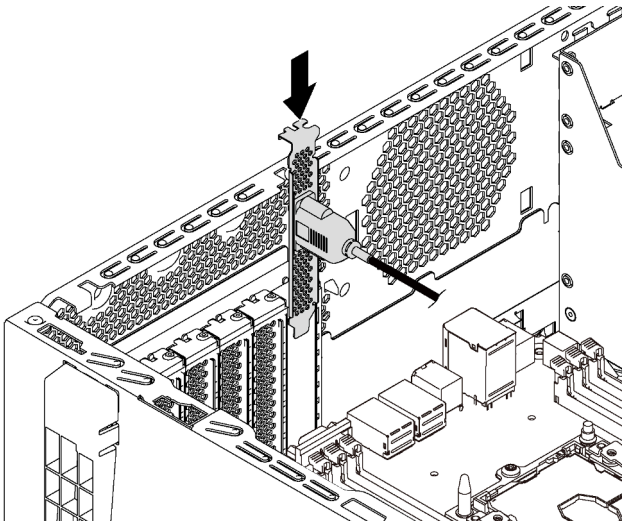

Figure 52. Serial port module installation

Step 2. Connect the cable of the serial port module to the serial-port-module connector on the system board. For the location of the serial-port-module connector, see "System board components" on page 30.

After installing the serial port module, do one of the following to enable it according to the installed operating system:

- For Linux operating system:

  Open the ipmitool and enter the following command to disable the Serial over LAN (SOL) feature:

  ```
  -I lanplus -H IP -U USERID -P PASSWORD sol deactivate
  ```

- For Microsoft Windows operating system:
  1. Open the ipmitool and enter the following command to disable the SOL feature:

     ```
     -I lanplus -H IP -U USERID -P PASSWORD sol deactivate
     ```

  2. Open Windows PowerShell and enter the following command to disable the Emergency Management Services (EMS) feature:

     ```
     Bcdedit /ems no
     ```

  3. Restart the server to ensure that the EMS setting takes effect.

Install the M.2 backplane and M.2 drive

Use this information to install the M.2 backplane and M.2 drive.

"**Read** the installation Guidelines" on page 66

"**Power off** the server for this task" on page 117

"**ATTENTION: Static Sensitive Device** Ground package before opening" on page 68

Before installing the M.2 backplane and M.2 drive:

1. Touch the static-protective package that contains the new M.2 backplane and M.2 drive to any unpainted surface on the outside of the server. Then, take the new M.2 backplane and M.2 drive out of the package and place them on a static-protective surface.
2. Adjust the retainer on the M.2 backplane to accommodate the particular size of the M.2 drive you wish to install. See "Adjust the retainer on the M.2 backplane" on page 96.
3. Locate the connector on each side of the M.2 backplane.

   Notes:

   - Some M.2 backplanes support two identical M.2 drives. When two M.2 drives are installed, align and support both M.2 drives when sliding the retainer forward to secure the M.2 drives.
   - Install the M.2 drive in slot 0 first.

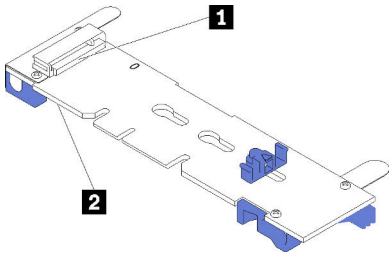

1 Slot 0
2 Slot 1

Figure 53. M.2 drive slot

To install the M.2 backplane and M.2 drive, complete the following steps:

Watch the procedure

A video of this procedure is available at YouTube: https://www.youtube.com/playlist?list=PLYV5R7hVcs-Acsjj4tU79GzKnWG316BYn

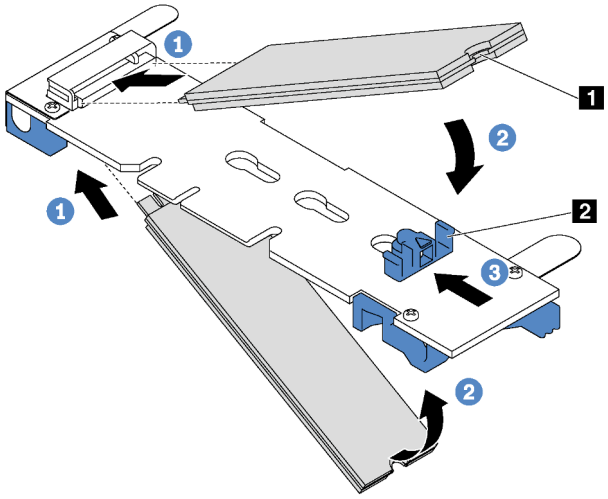

Figure 54. M.2 drive installation

Step 1. Insert the M.2 drive at an angle of approximately 30 degrees into the connector.

Note: If your M.2 backplane supports two M.2 drives, insert the M.2 drives into the connectors at both sides.

Step 2. Rotate the M.2 drive down until the notch **1** catches on the lip of the retainer **2**.

Step 3. Slide the retainer forward (toward the connector) to secure the M.2 drive into place.

Attention: When sliding the retainer forward, ensure that the two nubs **3** on the retainer enter the small holes **4** on the M.2 backplane. Once they enter the holes, you will hear a soft “click” sound.

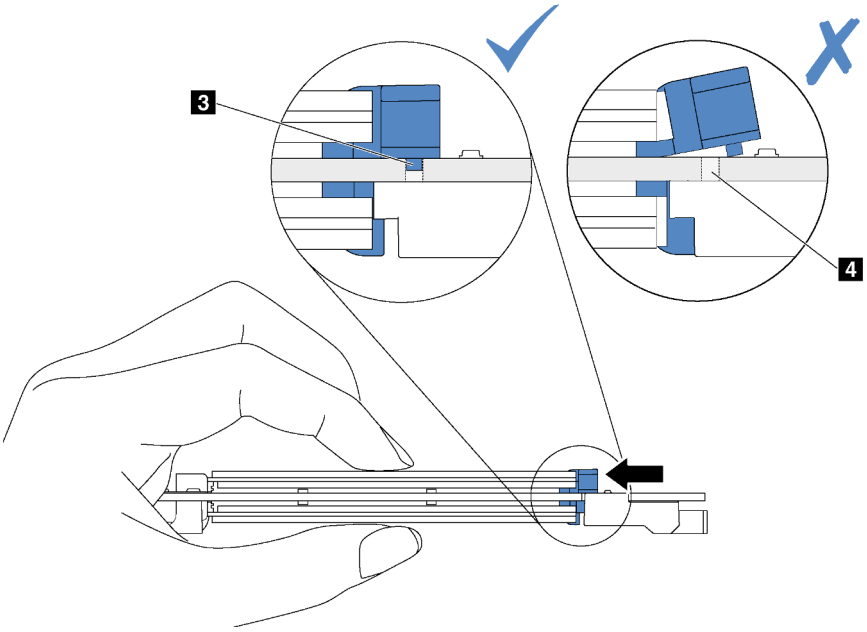

Figure 55. Instruction for sliding the retainer

Step 4. Align the blue plastic supports at each end of the M.2 backplane with the guide pins on the system board. Then, insert the M.2 backplane into the M.2 slot on the system board and press it down to fully seat it.

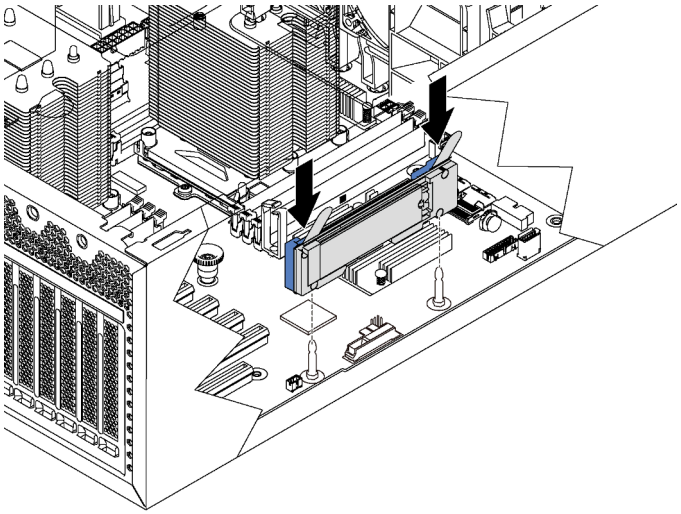

Figure 56. M.2 backplane installation

After installing the M.2 drive and M.2 backplane, use the Lenovo XClarity Provisioning Manager to configure the RAID. For more information, see:
http://sysmgt.lenovofiles.com/help/topic/LXPM/RAID_setup.html

Adjust the retainer on the M.2 backplane

Use this information to adjust the retainer on the M.2 backplane.

	"**Read** the installation Guidelines" on page 66	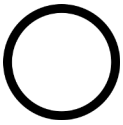	"**Power off** the server for this task" on page 117		"**ATTENTION: Static Sensitive Device** Ground package before opening" on page 68

Before adjusting the retainer on the M.2 backplane, locate the correct keyhole that the retainer should be installed into to accommodate the particular size of the M.2 drive you wish to install.

To adjust the retainer on the M.2 backplane, complete the following steps:

Watch the procedure

A video of this procedure is available at YouTube: https://www.youtube.com/playlist?list=PLYV5R7hVcs-Acsjj4tU79GzKnWG316BYn

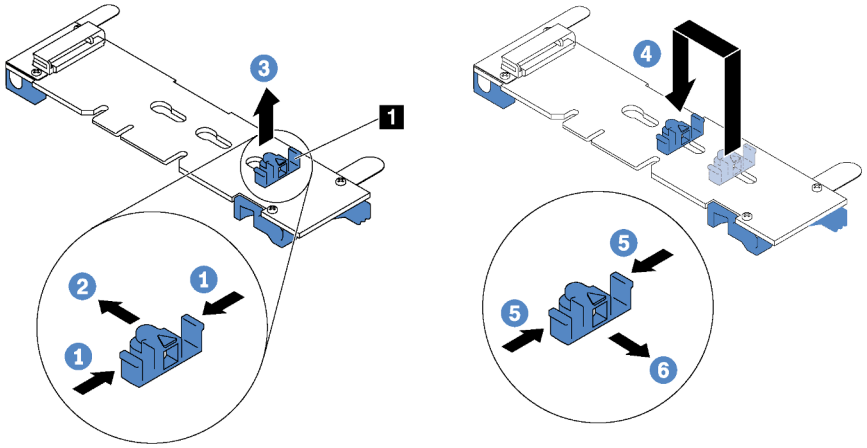

Figure 57. M.2 retainer adjustment

Step 1. Press both sides of the retainer 1.

Step 2. Move the retainer forward until it is in the large opening of the keyhole.

Step 3. Take the retainer out of the keyhole.

Step 4. Insert the retainer into the correct keyhole.

Step 5. Press both sides of the retainer.

Step 6. Slide the retainer backwards until it is seated in place.

Install the hot-swap power supply cage

Use this information to install the hot-swap power supply cage.

	"**Read** the installation Guidelines" on page 66	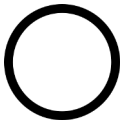	"**Power off** the server for this task" on page 117		"**ATTENTION: Static Sensitive Device** Ground package before opening" on page 68

Before installing the hot-swap power supply cage, touch the static-protective package that contains the new hot-swap power supply cage to any unpainted surface on the outside of the server. Then, take the new cage out of the package and place them on a static-protective surface.

To install the hot-swap power supply cage, complete the following steps:

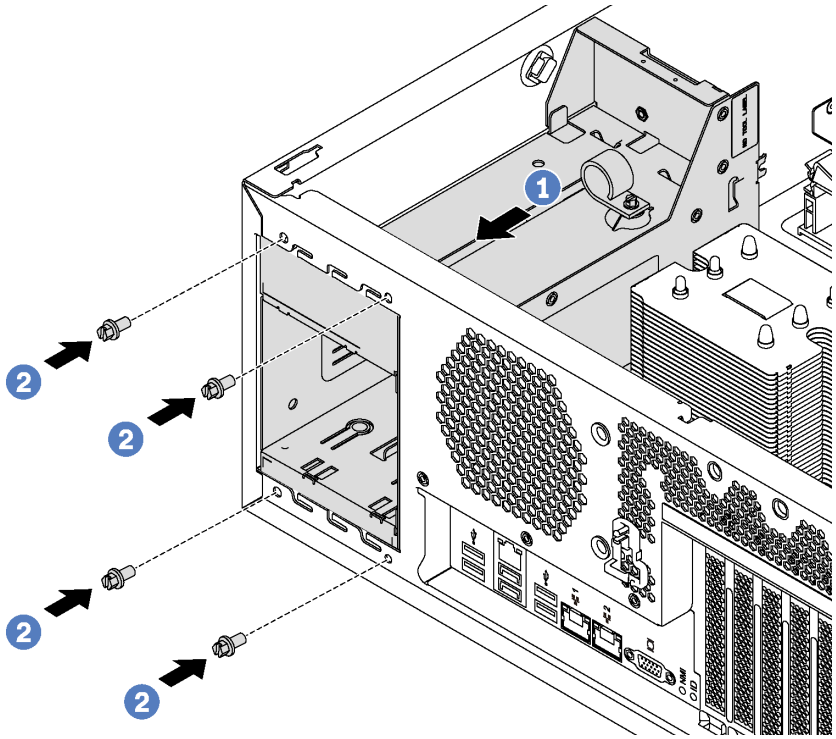

Figure 58. Hot-swap power supply cage installation

Step 1. Slide the new hot-swap power supply cage into the bay as shown until it snaps into position.

Step 2. Install the screws to secure the hot-swap power supply cage.

Install the power interface board

Use this information to install the power interface board.

	"**Read** the installation Guidelines" on page 66	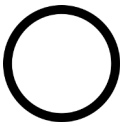 "**Power off** the server for this task" on page 117	"**ATTENTION: Static Sensitive Device** Ground package before opening" on page 68

Before installing the power interface board, touch the static-protective package that contains the new power interface board to any unpainted surface on the outside of the server. Then, take the new power interface board out of the package and place it on a static-protective surface.

To install the power interface board, complete the following steps:

Watch the procedure

A video of this procedure is available at YouTube: https://www.youtube.com/playlist?list=PLYV5R7hVcs-Acsjj4tU79GzKnWG316BYn

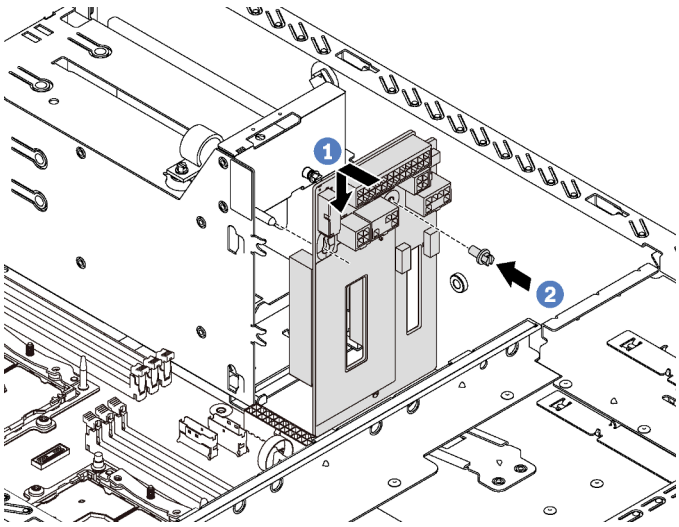

Figure 59. Power interface board installation

Step 1. Insert the hole in the power interface board into the corresponding mounting stud on the chassis. Then, gently move the power interface board downward so that it is engaged with the mounting stud.

Step 2. Install the screw to secure the power interface board in place.

Install a hot-swap power supply

Use this information to install a hot-swap power supply.

"**Read** the installation Guidelines" on page 66

"**ATTENTION: Static Sensitive Device** Ground package before opening" on page 68

The following tips describe the type of power supply that the server supports and other information that you must consider when you install a power supply:

- The standard shipping has only one power supply installed in the server. For redundancy and hot-swap support, you must install an additional hot-swap power supply. Certain customized models might be shipped with two power supplies installed.
- Ensure that the devices that you are installing are supported. For a list of supported optional devices for the server, go to:
  https://serverproven.lenovo.com/

  Notes:

  – Ensure that the two power supplies installed on the server have the same wattage.

  – If you are replacing the existing power supply with a new power supply of different wattage, attach the power information label that comes with this option onto the existing label near the power supply.

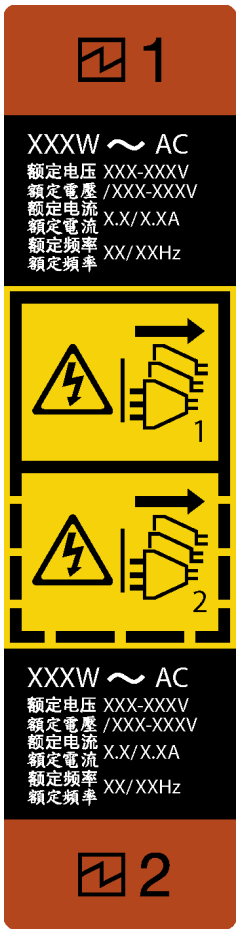

Figure 60. Hot-swap power supply label

S035

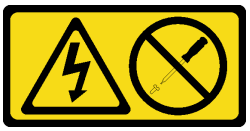

CAUTION:
Never remove the cover on a power supply or any part that has this label attached. Hazardous voltage, current, and energy levels are present inside any component that has this label attached. There are no serviceable parts inside these components. If you suspect a problem with one of these parts, contact a service technician.

S002

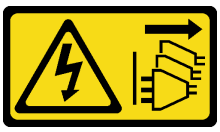

CAUTION:
The power-control button on the device and the power switch on the power supply do not turn off the electrical current supplied to the device. The device also might have more than one power cord. To

remove all electrical current from the device, ensure that all power cords are disconnected from the power source.

S001

DANGER

Electrical current from power, telephone, and communication cables is hazardous.
To avoid a shock hazard:

- **Connect all power cords to a properly wired and grounded electrical outlet/source.**
- **Connect any equipment that will be attached to this product to properly wired outlets/sources.**
- **When possible, use one hand only to connect or disconnect signal cables.**
- **Never turn on any equipment when there is evidence of fire, water, or structural damage.**
- **The device might have more than one power cord, to remove all electrical current from the device, ensure that all power cords are disconnected from the power source.**

The following tips describe the information that you must consider when you install a power supply with dc input.

CAUTION:
240 V dc input (input range: 180-300 V dc) is supported in Chinese Mainland ONLY. Power supply with 240 V dc input cannot support hot plugging power cord function. Before removing the power supply with dc input, please turn off server or disconnect dc power sources at the breaker panel or by turning off the power source. Then, remove the power cord.

在直流输入状态下，若电源供应器插座不支持热插拔功能，请务必不要对设备电源线进行热插拔，此操作可能导致设备损坏及数据丢失。因错误执行热插拔导致的设备故障或损坏，不属于保修范围。

NEVER CONNECT AND DISCONNECT THE POWER SUPPLY CABLE AND EQUIPMENT WHILE YOUR EQUIPMENT IS POWERED ON WITH DC SUPPLY (hot-plugging). Otherwise you may damage the equipment and result in data loss, the damages and losses result from incorrect operation of the equipment will not be covered by the manufacturers' warranty.

S035

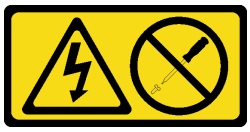

CAUTION:

Never remove the cover on a power supply or any part that has this label attached. Hazardous voltage, current, and energy levels are present inside any component that has this label attached. There are no serviceable parts inside these components. If you suspect a problem with one of these parts, contact a service technician.

S019

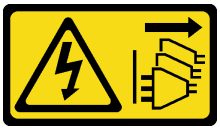

CAUTION:
The power-control button on the device does not turn off the electrical current supplied to the device. The device also might have more than one connection to dc power. To remove all electrical current from the device, ensure that all connections to dc power are disconnected at the dc power input terminals.

Before installing a hot-swap power supply, touch the static-protective package that contains the new hot-swap power supply to any unpainted surface on the outside of the server. Then, take the new hot-swap power supply out of the package and place it on a static-protective surface.

To install a hot-swap power supply, complete the following steps:

Watch the procedure

A video of this procedure is available at YouTube: https://www.youtube.com/playlist?list=PLYV5R7hVcs-Acsjj4tU79GzKnWG316BYn

Step 1. If there is a power-supply-bay filler installed, remove it.

Important: To ensure proper cooling during normal server operation, both of the power supply bays must be occupied. This means that each bay must have a power supply installed; or one has a power supply installed and the other has a power-supply filler installed.

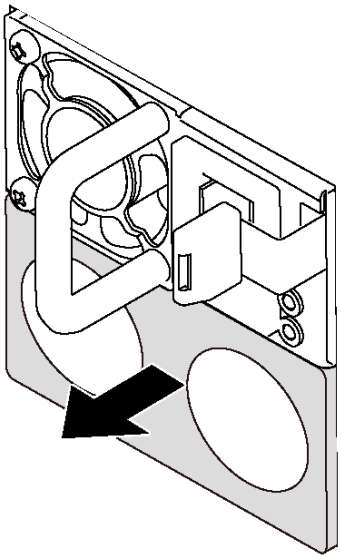

Figure 61. Hot-swap power supply filler removal

Step 2. Slide the new hot-swap power supply into the bay until it snaps into position.

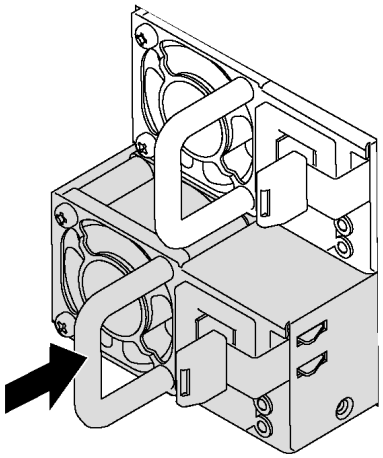

Figure 62. Hot-swap power supply installation

Install a front fan

Use this information to install a front fan.

"**Read** the installation Guidelines" on page 66	"**Power off** the server for this task" on page 117	"**ATTENTION: Static Sensitive Device** Ground package before opening" on page 68

S033

CAUTION:
Hazardous energy present. Voltages with hazardous energy might cause heating when shorted with metal, which might result in spattered metal, burns, or both.

S009

CAUTION:
To avoid personal injury, disconnect the fan cables before removing the fan from the device.

S002

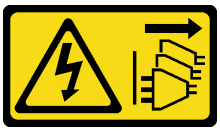

CAUTION:
The power-control button on the device and the power switch on the power supply do not turn off the electrical current supplied to the device. The device also might have more than one power cord. To remove all electrical current from the device, ensure that all power cords are disconnected from the power source.

To install a front fan, complete the following steps:

Watch the procedure

A video of this procedure is available at YouTube: https://www.youtube.com/playlist?list=PLYV5R7hVcs-Acsjj4tU79GzKnWG316BYn

Step 1. Touch the static-protective package that contains the new front fan to any unpainted surface on the outside of the server. Then, take the new front fan out of the package and place it on a static-protective surface.

Step 2. Align the pins on the front fan with the corresponding holes in the chassis. Then, pivot the front fan forward until it snaps into place.

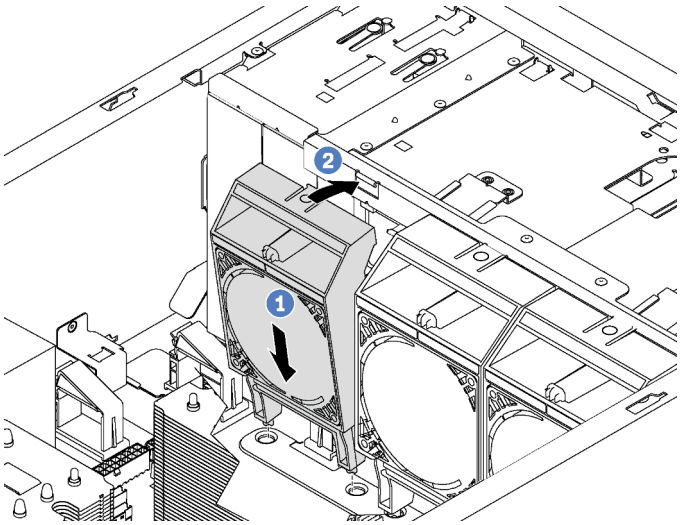

Figure 63. Front fan installation

Step 3. Connect the front fan cable to the corresponding fan connector on the system board. For the location of the system fan connectors, see "System board components" on page 30.

Install the rear fan

Use this information to install the rear fan.

	"**Read** the installation Guidelines" on page 66	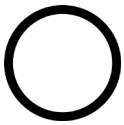 "**Power off** the server for this task" on page 117	"**ATTENTION: Static Sensitive Device** Ground package before opening" on page 68

S033

CAUTION:
Hazardous energy present. Voltages with hazardous energy might cause heating when shorted with metal, which might result in spattered metal, burns, or both.

S009

CAUTION:
To avoid personal injury, disconnect the fan cables before removing the fan from the device.

S002

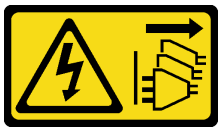

CAUTION:
The power-control button on the device and the power switch on the power supply do not turn off the electrical current supplied to the device. The device also might have more than one power cord. To remove all electrical current from the device, ensure that all power cords are disconnected from the power source.

To install the rear fan, complete the following steps:

Watch the procedure

A video of this procedure is available at YouTube: https://www.youtube.com/playlist?list=PLYV5R7hVcs-Acsjj4tU79GzKnWG316BYn

Step 1. Touch the static-protective package that contains the new rear fan to any unpainted surface on the outside of the server. Then, take the new rear fan out of the package and place it on a static-protective surface.

Step 2. Align the pins on the rear fan with the corresponding holes in the chassis. Then, pivot the rear fan toward the rear of the chassis until it snaps into place.

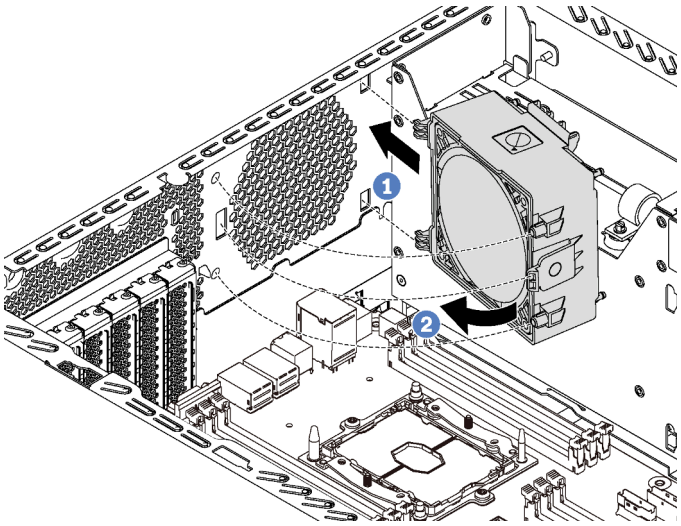

Figure 64. Rear fan installation

Step 3. Connect the rear fan cable to the system fan 4 connector on the system board. For the location of the system fan 4 connector, see "System board components" on page 30.

Install the PCIe adapter holder

Use this information to install the PCIe adapter holder.

"**Read** the installation Guidelines" on page 66	"**Power off** the server for this task" on page 117

To install the PCIe adapter holder, complete the following steps:

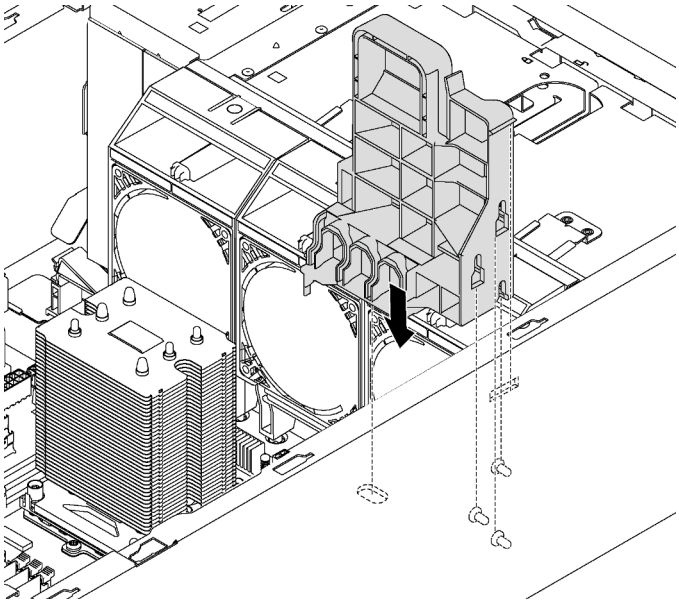

Figure 65. PCIe adapter holder installation

Step 1. Insert the PCIe-adapter-holder post into the corresponding recess in the chassis.

Step 2. Secure the three notches on the PCIe adapter holder with the three mounting studs on the chassis.

Step 3. Secure the PCIe-adapter-holder tab with the corresponding hole in the chassis.

Install the PCIe adapter retainer

Use this information to install the PCIe adapter retainer.

"**Read** the installation Guidelines" on page 66

"**Power off** the server for this task" on page 117

To install the PCIe adapter retainer, complete the following steps:

Watch the procedure

A video of this procedure is available at YouTube: https://www.youtube.com/playlist?list=PLYV5R7hVcs-Acsjj4tU79GzKnWG316BYn

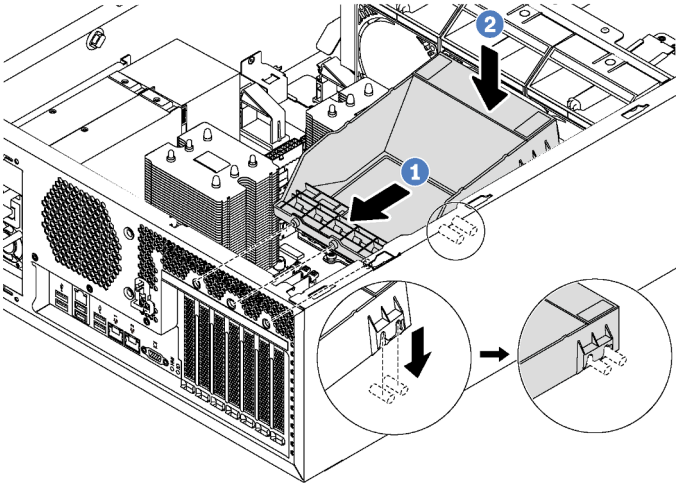

Figure 66. PCIe adapter retainer installation

Step 1. Position the new PCIe adapter retainer over PCIe slots. Then, align the three pins on the retainer with the corresponding holes on the chassis and insert the pins into the holes.

Step 2. Pivot the PCIe adapter retainer downward until the notches on the PCIe adapter retainer catch on the mounting studs on the chassis.

Install the air baffle

Use this information to install the air baffle.

"**Read** the installation Guidelines" on page 66

"**Power off** the server for this task" on page 117

S033

CAUTION:
Hazardous energy present. Voltages with hazardous energy might cause heating when shorted with metal, which might result in spattered metal, burns, or both.

S017

CAUTION:
Hazardous moving fan blades nearby. Keep fingers and other body parts away.

Before installing the air baffle, ensure that all cables inside the server have been properly routed so that they will not interfere with the air baffle.

To install the air baffle, complete the following steps:

Watch the procedure

A video of this procedure is available at YouTube: https://www.youtube.com/playlist?list=PLYV5R7hVcs-Acsjj4tU79GzKnWG316BYn

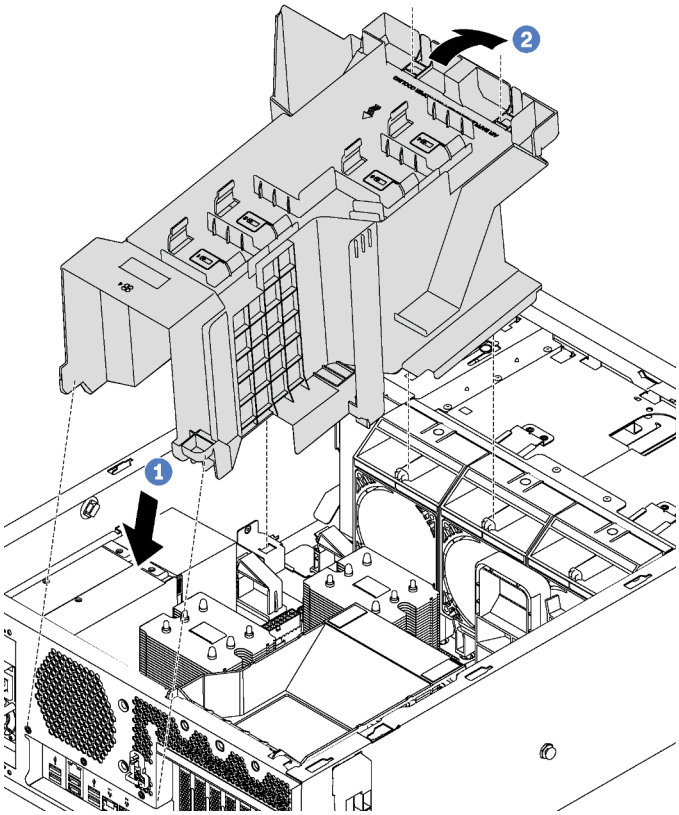

Figure 67. Air baffle installation

Step 1. Carefully insert the rear end of the air baffle into the chassis.

Step 2. Press the front end of the air baffle downward until it snaps into place.

After installing the air baffle, connect the RAID super capacitor module to a RAID adapter with the extension cable that comes with the RAID super capacitor module.

Install the RAID super capacitor module

Use this information to install the RAID super capacitor module.

"**Read** the installation Guidelines" on page 66	"**Power off** the server for this task" on page 117	"**ATTENTION: Static Sensitive Device** Ground package before opening" on page 68

To install a RAID super capacitor module, complete the following steps:

Watch the procedure

A video of this procedure is available at YouTube: https://www.youtube.com/playlist?list=PLYV5R7hVcs-Acsjj4tU79GzKnWG316BYn

Step 1. Touch the static-protective package that contains the new RAID super capacitor module to any unpainted surface on the outside of the server. Then, take the new RAID super capacitor module out of the package and place it on a static-protective surface.

Step 2. Insert one end of the RAID super capacitor module into the slot of the air baffle. Then, press down the other end of the RAID super capacitor module until it snaps in place.

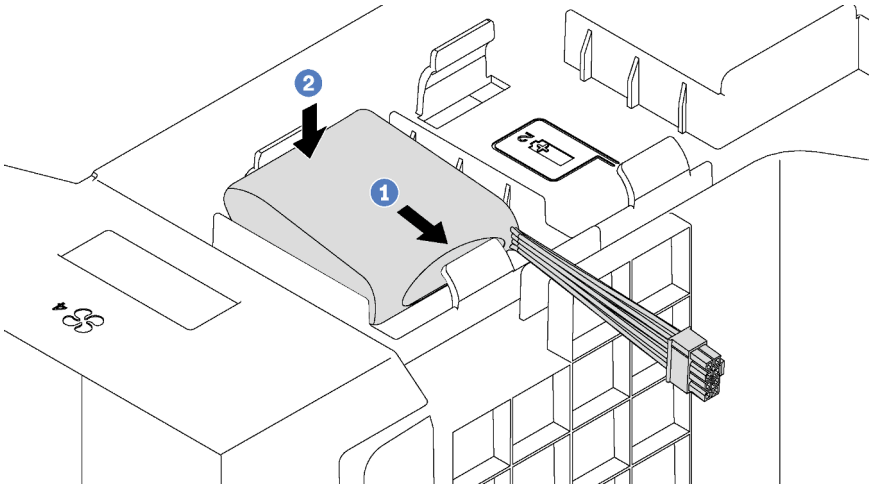

Figure 68. RAID super capacitor module installation

Step 3. Connect the RAID super capacitor module to the extension cable.

Install the server cover

Use this information to install the server cover.

	"**Read** the installation Guidelines" on page 66	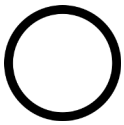 "**Power off** the server for this task" on page 117	"**ATTENTION: Static Sensitive Device** Ground package before opening" on page 68

S033

CAUTION:
Hazardous energy present. Voltages with hazardous energy might cause heating when shorted with metal, which might result in spattered metal, burns, or both.

S014

CAUTION:
Hazardous voltage, current, and energy levels might be present. Only a qualified service technician is authorized to remove the covers where the label is attached.

Before installing the server cover:

1. Ensure that all adapters and other components are installed and seated correctly and that you have not left loose tools or parts inside the server.
2. Ensure that all internal cables are correctly routed. See "Internal cable routing" on page 31.

To install the server cover, complete the following steps:

Watch the procedure

A video of this procedure is available at YouTube: https://www.youtube.com/playlist?list=PLYV5R7hVcs-Acsjj4tU79GzKnWG316BYn

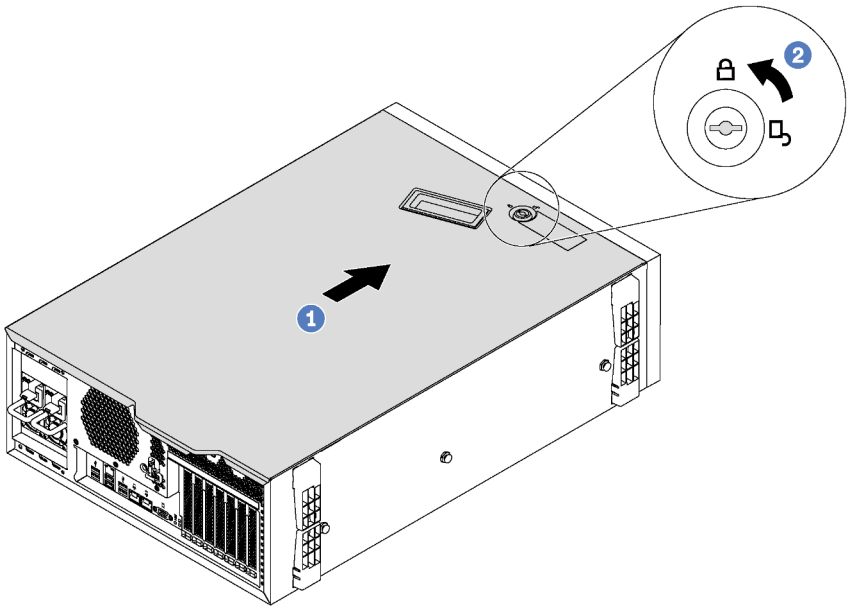

Figure 69. Server cover installation

Step 1. Lower the server cover onto the chassis until all tabs on both sides of the server cover engage the chassis. Then, slide the server cover toward the front of the chassis until the server cover stops and the front edge of the cover aligns with the edge of the front bezel.

Note: Before you slide the cover forward, ensure that all the tabs of the cover engage the chassis correctly. If all the tabs do not engage the chassis correctly, it will be very difficult to remove the cover later.

Step 2. Use the key to turn the cover lock to the locked position.

Install the foot stands

Use this information to install the foot stands.

"**Read** the installation Guidelines" on page 66

To install the foot stands, complete the following steps:

Watch the procedure

A video of this procedure is available at YouTube: https://www.youtube.com/playlist?list=PLYV5R7hVcs-Acsjj4tU79GzKnWG316BYn

Step 1. Lay the server on its side for easier operation.

Step 2. For each foot stand, carefully insert the two tabs on the foot stand into the corresponding holes in the chassis. Then, pivot the foot stand inward until the other side clicks into place.

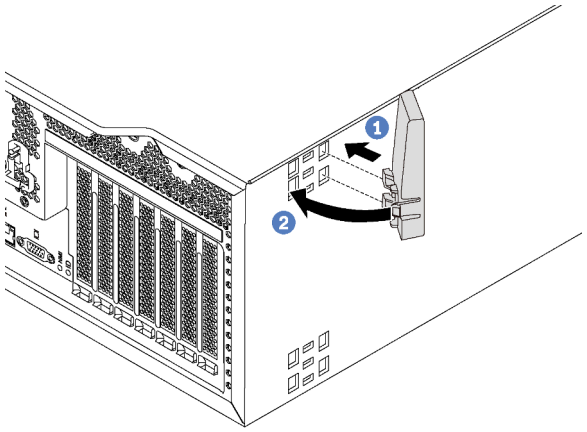

Figure 70. Foot stand installation

Important: To help the server stand steadily, ensure that the foot stands are installed outward as shown in "Front view" on page 19.

Install a simple-swap drive

Use this information to install a simple-swap drive.

"**Read** the installation Guidelines" on page 66

"**Power off** the server for this task" on page 117

"**ATTENTION: Static Sensitive Device** Ground package before opening" on page 68

The following notes describe the type of drives that your server supports and other information that you must consider when you install a drive.

- For a complete list of supported optional devices for the server, see: https://serverproven.lenovo.com/
- The drive bays are numbered to indicate the installation order (starting from number "0"). Follow the installation order when you install a drive. See "Front view" on page 19.

- You can mix drives of different types, different sizes, and different capacities in one system, but not in one RAID array. The following order is recommended when installing the drives:
  - Drive type priority: SSD, SATA HDD
  - Drive capacity priority: the lowest capacity first
- The drives in a single RAID array must be the same type, same size, and same capacity.

Before installing a simple-swap drive:

1. If the drive bay has a drive filler installed, remove it. Keep the drive filler in a safe place for future use.

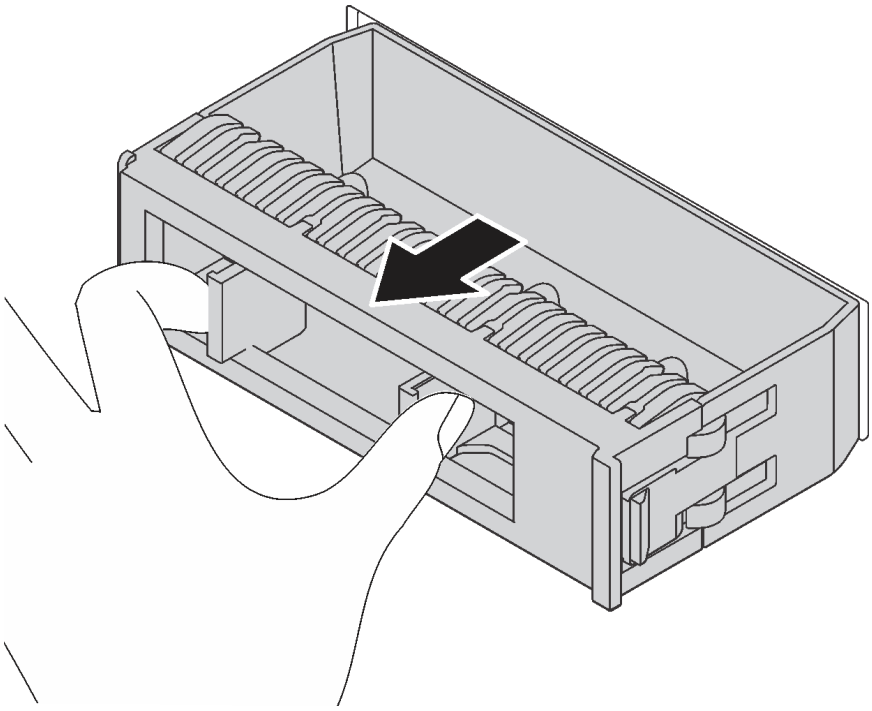

Figure 71. 3.5-inch drive filler removal

2. Touch the static-protective package that contains the new simple-drive to any unpainted surface on the outside of the server. Then, take the new simple-swap drive out of the package and place it on a static-protective surface.

To install a simple-swap drive, complete the following steps:

Step 1. Use a screwdriver to turn the handle lock **1** to the unlocked position. Then, the tray handle opens automatically.

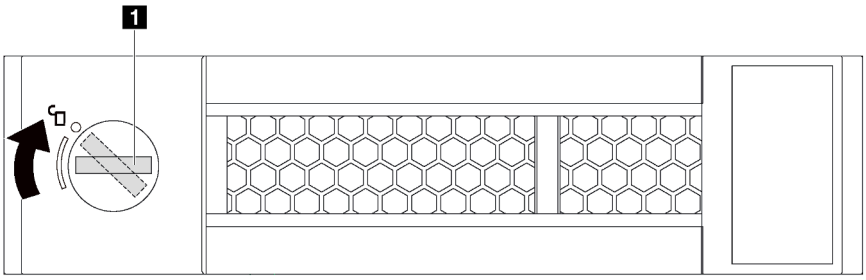

Figure 72. Opening the tray handle of a 3.5-inch simple-swap drive

Step 2. Align the drive with the guide rails in the bay and gently push the drive into the bay until the drive stops. Then, close the tray handle to lock the drive in place.

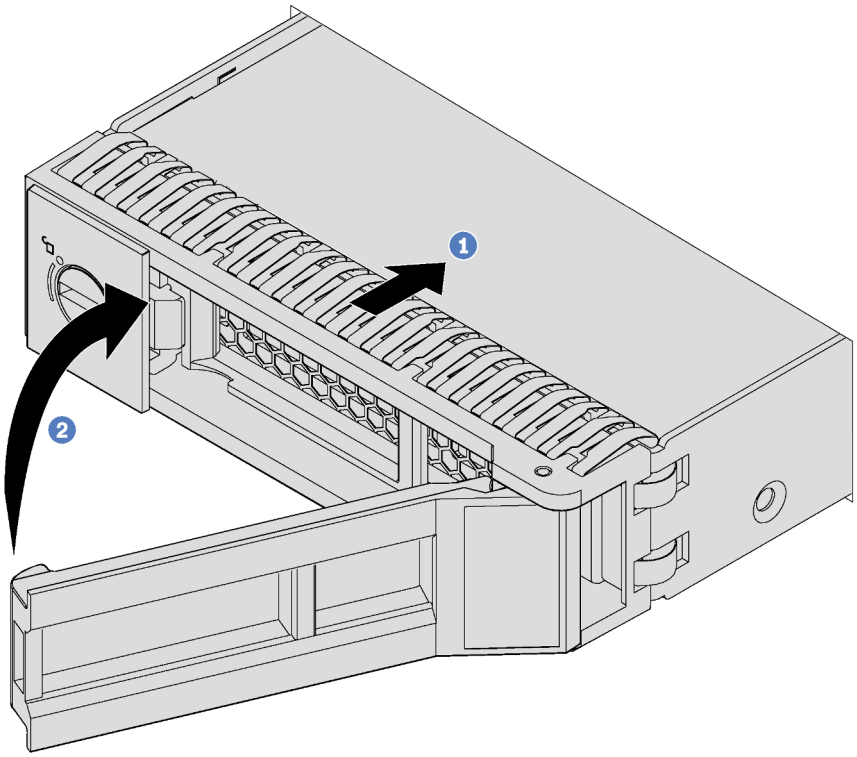

Figure 73. 3.5-inch simple-swap drive installation

Install a hot-swap drive

Use this information to install a hot-swap drive.

"**Read** the installation Guidelines" on page 66	"**ATTENTION: Static Sensitive Device** Ground package before opening" on page 68

The following notes describe the type of drives that your server supports and other information that you must consider when you install a drive.

- Depending on your server models, your server supports the following drive types:
  - NVMe SSD
  - SAS/SATA SSD
  - SAS/SATA HDD

  For a complete list of supported optional devices for the server, see: https://serverproven.lenovo.com/
- The drive bays are numbered to indicate the installation order (starting from number "0"). Follow the installation order when you install a drive. See "Front view" on page 19.

- You can mix drives of different types, different sizes, and different capacities in one system, but not in one RAID array. The following order is recommended when installing the drives:
  - Drive type priority: NVMe SSD, SAS SSD, SATA SSD, SAS HDD, SATA HDD
  - Drive size priority: 2.5 inch, 3.5 inch
  - Drive capacity priority: the lowest capacity first
- The drives in a single RAID array must be the same type, same size, and same capacity.

Before installing a hot-swap drive:

1. If the drive bay has a drive filler installed, remove it. Keep the drive filler in a safe place for future use.

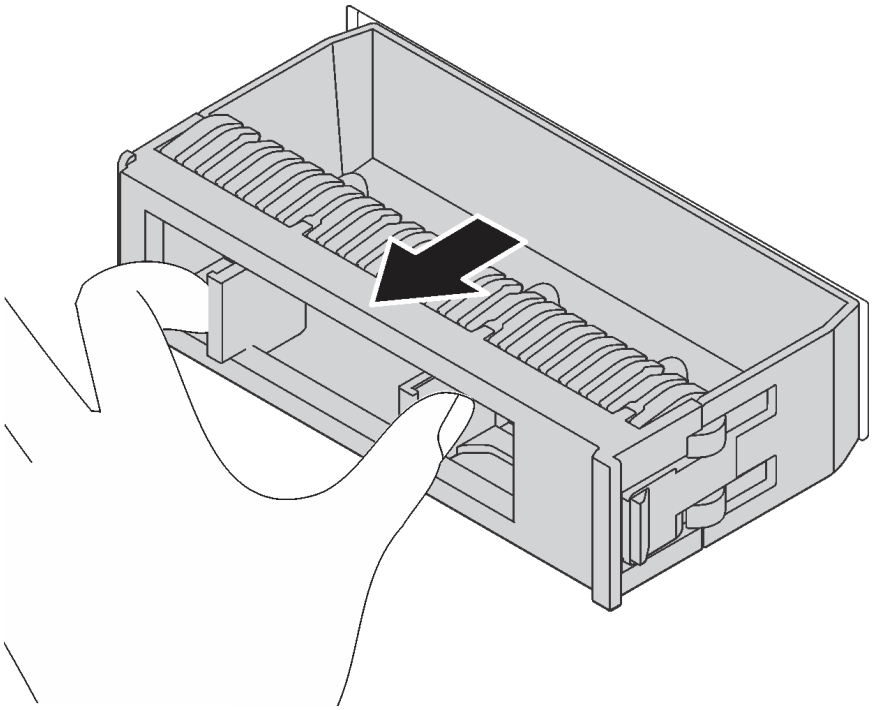

Figure 74. Drive filler removal

2. Touch the static-protective package that contains the new hot-swap drive to any unpainted surface on the outside of the server. Then, take the new hot-swap drive out of the package and place it on a static-protective surface.

To install a hot-swap drive, complete the following steps:

Watch the procedure

A video of this procedure is available at YouTube: https://www.youtube.com/playlist?list=PLYV5R7hVcs-Acsjj4tU79GzKnWG316BYn

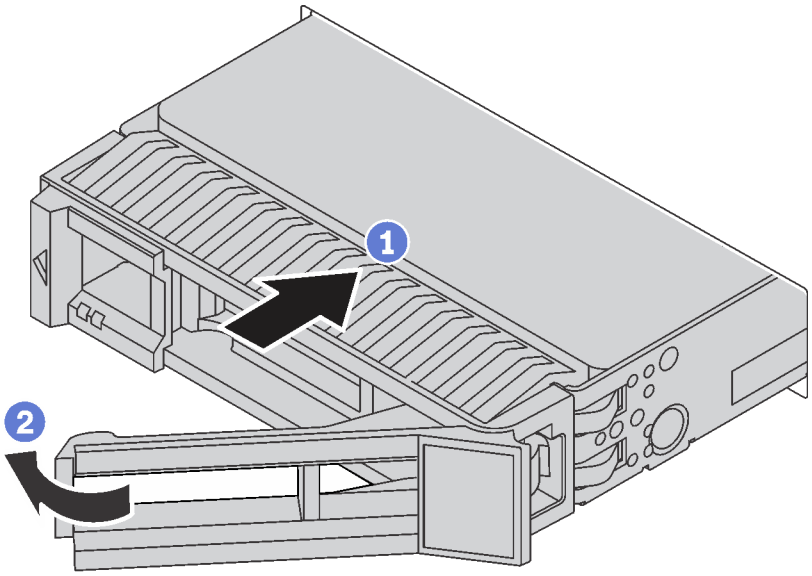

Figure 75. Hot-swap drive installation

Step 1. Slide the release latch to open the tray handle. Then, slide the drive into the drive bay until it snaps into position.

Step 2. Close the tray handle to lock the drive in place.

Cable the server

Attach all external cables to the server. Typically, you will need to connect the server to a power source, to the data network, and to storage. In addition, you will need to connect the server to the management network.

Connect to power

Connect the server to power.

Connect to the network

Connect the server to the network.

Connect to storage

Connect the server to any storage devices.

Power on the server

After the server performs a short self-test (power status LED flashes quickly) when connected to input power, it enters a standby state (power status LED flashes once per second).

The server can be turned on (power LED on) in any of the following ways:

- You can press the power button.
- The server can restart automatically after a power interruption.
- The server can respond to remote power-on requests sent to the Lenovo XClarity Controller.

For information about powering off the server, see "Power off the server" on page 117.

Validate server setup

After powering up the server, make sure that the LEDs are lit and that they are green.

Power off the server

The server remains in a standby state when it is connected to a power source, allowing the Lenovo XClarity Controller to respond to remote power-on requests. To remove all power from the server (power-on LED off), you must disconnect all power cables.

To place the server in a standby state (power-on LED flashes once per second):

Note: The Lenovo XClarity Controller can place the server in a standby state as an automatic response to a critical system failure.

- Start an orderly shutdown using the operating system (if supported by your operating system).
- Press the power-on button to start an orderly shutdown (if supported by your operating system).
- Press and hold the power button for more than 4 seconds to force a shutdown.

When in a standby state, the server can respond to remote power-on requests sent to the Lenovo XClarity Controller. For information about powering on the server, see "Power on the server" on page 116.

Chapter 4. System configuration

Complete these procedures to configure your system.

Set the network connection for the Lenovo XClarity Controller

Before you can access the Lenovo XClarity Controller over your network, you need to specify how Lenovo XClarity Controller will connect to the network. Depending on how the network connection is implemented, you might need to specify a static IP address as well.

The following methods are available to set the network connection for the Lenovo XClarity Controller if you are not using DHCP:

- If a monitor is attached to the server, you can use Lenovo XClarity Controller to set the network connection.
- If you are using the Lenovo XClarity Administrator Mobile app from a mobile device, you can connect to the Lenovo XClarity Controller through the Lenovo XClarity Controller USB connector on the front of the server.

  Note: The Lenovo XClarity Controller USB connector mode must be set to manage the Lenovo XClarity Controller (instead of normal USB mode). To switch from normal mode to Lenovo XClarity Controller management mode, hold the blue ID button on the front panel for at least 3 seconds until its LED flashes slowly (once every couple of seconds).

  To connect using the Lenovo XClarity Administrator Mobile app:

  1. Connect the USB cable of your mobile device to the Lenovo XClarity Administrator USB connector on the front panel.
  2. On your mobile device, enable USB tethering.
  3. On your mobile device, launch the Lenovo XClarity Administrator mobile app.
  4. If automatic discovery is disabled, click **Discovery** on the USB Discovery page to connect to the Lenovo XClarity Controller.

  For more information about using the Lenovo XClarity Administrator Mobile app, see:

  http://sysmgt.lenovofiles.com/help/index.jsp?topic=%2Fcom.lenovo.lxca.doc%2Flxca_usemobileapp.html

Important: The Lenovo XClarity Controller is set initially with a user name of USERID and password of PASSW0RD (with a zero, not the letter O). This default user setting has Supervisor access. Change this user name and password during your initial configuration for enhanced security.

Complete the following steps to connect the Lenovo XClarity Controller to the network using the Lenovo XClarity Provisioning Manager.

Step 1. Start the server.

Step 2. When you see <F1> Setup, press F1 to open up the Lenovo XClarity Provisioning Manager

Step 3. Go to **LXPM → UEFI Setup → BMC Settings** to specify how the Lenovo XClarity Controller will connect to the network.

- If you choose a static IP connection, make sure that you specify an IPv4 or IPv6 address that is available on the network.

© Copyright Lenovo 2017, 2025

- If you choose a DHCP connection, make sure that the MAC address for the server has been configured in the DHCP server.

Step 4. Click **OK** to continue starting the server.

Update the firmware

Several options are available to update the firmware for the server.

You can use the tools listed here to update the most current firmware for your server and the devices that are installed in the server.

Note: Lenovo typically releases firmware in bundles called UpdateXpress System Packs (UXSPs). To ensure that all of the firmware updates are compatible, you should update all firmware at the same time. If you are updating firmware for both the Lenovo XClarity Controller and UEFI, update the firmware for Lenovo XClarity Controller first.

Best practices related to updating firmware is available at the following location:

http://lenovopress.com/LP0656

Important terminology

- **In-band update**. The installation or update is performed using a tool or application within an operating system that is executing on the server's core CPU.
- **Out-of-band update**. The installation or update is performed by the Lenovo XClarity Controller collecting the update and then directing the update to the target subsystem or device. Out-of-band updates have no dependency on an operating system executing on the core CPU. However, most out-of-band operations do require the server to be in the S0 (Working) power state.
- **On-Target update.** The installation or update is initiated from an Operating System executing on the server's operating system.
- **Off-Target update.** The installation or update is initiated from a computing device interacting directly with the server's Lenovo XClarity Controller.
- **UpdateXpress System Packs (UXSPs)**. UXSPs are bundled updates designed and tested to provide the interdependent level of functionality, performance, and compatibility. UXSPs are server machine-type specific and are built (with firmware and device driver updates) to support specific Windows Server, Red Hat Enterprise Linux (RHEL) and SUSE Linux Enterprise Server (SLES) operating system distributions. Machine-type-specific firmware-only UXSPs are also available.

See the following table to determine the best Lenovo tool to use for installing and setting up the firmware:

Note: The server UEFI settings for option ROM must be set to **Auto** or **UEFI** to update firmware using Lenovo XClarity Administrator or Lenovo XClarity Essentials. For more information, see the following Tech Tip:

https://datacentersupport.lenovo.com/us/en/solutions/ht506118

Tool		In-band update	Out-of-band update	On-target update	Off-target update	Graphical user interface	Command-line interface	Supports UXSPs
Lenovo XClarity Provisioning Manager Limited to core system firmware only.		√[2]			√	√		√
Lenovo XClarity Controller Supports core system firmware and most advanced I/O option firmware updates			√		√	√	√	
Lenovo XClarity Essentials OneCLI Supports all core system firmware, I/O firmware, and installed operating system driver updates		√	√				√	√
Lenovo XClarity Essentials UpdateXpress Supports all core system firmware, I/O firmware, and installed operating system driver updates		√	√			√		√
Lenovo XClarity Essentials Bootable Media Creator Supports core system firmware and I/O firmware updates. You can update the Microsoft Windows operating system, but device drivers are not included on the bootable image		√				√	√	√
Lenovo XClarity Administrator Supports core system firmware and I/O firmware updates		√	√		√	√		
Lenovo XClarity Integrator offerings	**Lenovo XClarity Integrator for VMware vCenter** Supports all core system firmware, I/O firmware, and installed operating system driver updates		√		√	√		
	Lenovo XClarity Integrator for Microsoft Windows Admin Center Supports all core system firmware, I/O firmware, and installed operating system driver updates	√	√	√	√	√		

Tool		In-band update	Out-of-band update	On-target update	Off-target update	Graphical user interface	Command- line interface	Supports UXSPs
	Lenovo XClarity Integrator for Microsoft System Center Configuration Manager Supports all core system firmware, I/O firmware, and installed operating system driver updates	√		√		√		√

The latest firmware can be found at the following site:

http://datacentersupport.lenovo.com/us/en/products/servers/thinksystem/st550/7X09/downloads

- **Lenovo XClarity Provisioning Manager**

  From Lenovo XClarity Provisioning Manager, you can update the Lenovo XClarity Controller firmware, the UEFI firmware, and the Lenovo XClarity Provisioning Manager software.

  Note: By default, the Lenovo XClarity Provisioning Manager Graphical User Interface is displayed when you press F1. If you have changed that default to be the text-based system setup, you can bring up the Graphical User Interface from the text-based system setup interface.

  Additional information about using Lenovo XClarity Provisioning Manager to update firmware is available at:

  https://pubs.lenovo.com/lxpm/platform_update

- **Lenovo XClarity Controller**

  If you need to install a specific update, you can use the Lenovo XClarity Controller interface for a specific server.

  Notes:

  – To perform an in-band update through Windows or Linux, the operating system driver must be installed and the Ethernet-over-USB (sometimes called LAN over USB) interface must be enabled.

    Additional information about configuring Ethernet over USB is available at:

    https://pubs.lenovo.com/xcc/NN1ia_c_configuringUSB

  – If you update firmware through the Lenovo XClarity Controller, make sure that you have downloaded and installed the latest device drivers for the operating system that is running on the server.

  Specific details about updating firmware using Lenovo XClarity Controller are available at:

  https://pubs.lenovo.com/xcc/NN1ia_c_manageserverfirmware

- **Lenovo XClarity Essentials OneCLI**

  Lenovo XClarity Essentials OneCLI is a collection of command line applications that can be used to manage Lenovo servers. Its update application can be used to update firmware and device drivers for

your servers. The update can be performed within the host operating system of the server (in-band) or remotely through the BMC of the server (out-of-band).

Specific details about updating firmware using Lenovo XClarity Essentials OneCLI is available at:

https://pubs.lenovo.com/lxce-onecli/onecli_c_update

- **Lenovo XClarity Essentials UpdateXpress**

  Lenovo XClarity Essentials UpdateXpress provides most of OneCLI update functions through a graphical user interface (GUI). It can be used to acquire and deploy UpdateXpress System Pack (UXSP) update packages and individual updates. UpdateXpress System Packs contain firmware and device driver updates for Microsoft Windows and for Linux.

  You can obtain Lenovo XClarity Essentials UpdateXpress from the following location:

  https://datacentersupport.lenovo.com/solutions/lnvo-xpress

- **Lenovo XClarity Essentials Bootable Media Creator**

  You can use Lenovo XClarity Essentials Bootable Media Creator to create bootable media that is suitable for applying firmware updates, running preboot diagnostics, and deploying Microsoft Windows operating systems.

  You can obtain Lenovo XClarity Essentials BoMC from the following location:

  https://datacentersupport.lenovo.com/solutions/lnvo-bomc

- **Lenovo XClarity Administrator**

  If you are managing multiple servers using the Lenovo XClarity Administrator, you can update firmware for all managed servers through that interface. Firmware management is simplified by assigning firmware-compliance policies to managed endpoints. When you create and assign a compliance policy to managed endpoints, Lenovo XClarity Administrator monitors changes to the inventory for those endpoints and flags any endpoints that are out of compliance.

  Specific details about updating firmware using Lenovo XClarity Administrator are available at:

  https://pubs.lenovo.com/lxca/update_fw.html

- **Lenovo XClarity Integrator offerings**

  Lenovo XClarity Integrator offerings can integrate management features of Lenovo XClarity Administrator and your server with software used in a certain deployment infrastructure, such as VMware vCenter, Microsoft Admin Center, or Microsoft System Center.

  Specific details about updating firmware using Lenovo XClarity Integrator offerings are available at:

  https://pubs.lenovo.com/lxci-overview/

Configure the firmware

Several options are available to install and set up the firmware for the server.

- **Lenovo XClarity Provisioning Manager**

  From Lenovo XClarity Provisioning Manager, you can configure the UEFI settings for your server.

  Note: The Lenovo XClarity Provisioning Manager provides a Graphical User Interface to configure a server. The text-based interface to system configuration (the Setup Utility) is also available. From Lenovo XClarity Provisioning Manager, you can choose to restart the server and access the text-based interface. In addition, you can choose to make the text-based interface the default interface that is displayed when you press F1.

- **Lenovo XClarity Essentials OneCLI**

You can use the config application and commands to view the current system configuration settings and make changes to Lenovo XClarity Controller and UEFI. The saved configuration information can be used to replicate or restore other systems.

For information about configuring the server using Lenovo XClarity Essentials OneCLI, see:

https://pubs.lenovo.com/lxce-onecli/onecli_c_settings_info_commands

- **Lenovo XClarity Administrator**

  You can quickly provision and pre-provision all of your servers using a consistent configuration. Configuration settings (such as local storage, I/O adapters, boot settings, firmware, ports, and Lenovo XClarity Controller and UEFI settings) are saved as a server pattern that can be applied to one or more managed servers. When the server patterns are updated, the changes are automatically deployed to the applied servers.

  Specific details about updating firmware using Lenovo XClarity Administrator are available at:

  https://pubs.lenovo.com/lxca/server_configuring.html

- **Lenovo XClarity Controller**

  You can configure the management processor for the server through the Lenovo XClarity Controller Web interface or through the command-line interface.

  For information about configuring the server using Lenovo XClarity Controller, see:

  https://pubs.lenovo.com/xcc/NN1ia_c_manageserverfirmware

Memory configuration

Memory performance depends on several variables, such as memory mode, memory speed, memory ranks, memory population and processor.

More information about optimizing memory performance and configuring memory is available at the Lenovo Press website:

https://lenovopress.com/servers/options/memory

In addition, you can take advantage of a memory configurator, which is available at the following site:

https://dcsc.lenovo.com/#/memory_configuration

For specific information about the required installation order of memory modules in your server based on the system configuration and memory mode that you are implementing, see "DIMM installation rules" on page 79.

RAID configuration

Using a Redundant Array of Independent Disks (RAID) to store data remains one of the most common and cost-efficient methods to increase server's storage performance, availability, and capacity.

RAID increases performance by allowing multiple drives to process I/O requests simultaneously. RAID can also prevent data loss in case of a drive failure by reconstructing (or rebuilding) the missing data from the failed drive using the data from the remaining drives.

RAID array (also known as RAID drive group) is a group of multiple physical drives that uses a certain common method to distribute data across the drives. A virtual drive (also known as virtual disk or logical drive) is a partition in the drive group that is made up of contiguous data segments on the drives. Virtual drive

is presented up to the host operating system as a physical disk that can be partitioned to create OS logical drives or volumes.

An introduction to RAID is available at the following Lenovo Press website:

https://lenovopress.com/lp0578-lenovo-raid-introduction

Detailed information about RAID management tools and resources is available at the following Lenovo Press website:

https://lenovopress.com/lp0579-lenovo-raid-management-tools-and-resources

Deploy the operating system

Several options are available to deploy an operating system on the server.

Tool-based deployment

- **Multi-server**

  Available tools:

  – Lenovo XClarity Administrator

    https://pubs.lenovo.com/lxca/compute_node_image_deployment.html

  – Lenovo XClarity Essentials OneCLI

    https://pubs.lenovo.com/lxce-onecli/onecli_r_uxspi_proxy_tool

- **Single-server**

  Available tools:

  – Lenovo XClarity Provisioning Manager

    https://pubs.lenovo.com/lxpm/os_installation

  – Lenovo XClarity Essentials OneCLI

    https://pubs.lenovo.com/lxce-onecli/onecli_r_uxspi_proxy_tool

Manual deployment

If you cannot access the above tools, follow the instructions below, download the corresponding *OS Installation Guide*, and deploy the operating system manually by referring to the guide.

1. Go to https://datacentersupport.lenovo.com/solutions/server-os.
2. Select an operating system from the navigation pane and click **Resources**.
3. Locate the “OS Install Guides” area and click the installation instructions. Then, follow the instructions to complete the operation system deployment task.

Back up the server configuration

After setting up the server or making changes to the configuration, it is a good practice to make a complete backup of the server configuration.

Make sure that you create backups for the following server components:

- **Management processor**

You can back up the management processor configuration through the Lenovo XClarity Controller interface. For details about backing up the management processor configuration, see:

https://pubs.lenovo.com/xcc/NN1ia_c_backupthexcc

Alternatively, you can use the `save` command from Lenovo XClarity Essentials OneCLI to create a backup of all configuration settings. For more information about the `save` command, see:

https://pubs.lenovo.com/lxce-onecli/onecli_r_save_command

- **Operating system**

  Use your own operating-system and user-data backup methods to back up the operating system and user data for the server.

Update the Vital Product Data (VPD)

After initial setup of the system, you can update some Vital Product Data (VPD), such as asset tag and Universal Unique Identifier (UUID).

Update the Universal Unique Identifier (UUID)

Optionally, you can update the Universal Unique Identifier (UUID).

There are two methods available to update the UUID:

- From Lenovo XClarity Provisioning Manager

  To update the UUID from Lenovo XClarity Provisioning Manager:

  1. Start the server and press the key according to the on-screen instructions. (For more information, see the “Startup” section in the LXPM documentation compatible with your server at https://pubs.lenovo.com/lxpm-overview/.) The Lenovo XClarity Provisioning Manager interface is displayed by default.
  2. If the power-on Administrator password is required, enter the password.
  3. From the System Summary page, click **Update VPD**.
  4. Update the UUID.

- From Lenovo XClarity Essentials OneCLI

  Lenovo XClarity Essentials OneCLI sets the UUID in the Lenovo XClarity Controller. Select one of the following methods to access the Lenovo XClarity Controller and set the UUID:

  – Operate from the target system, such as LAN or keyboard console style (KCS) access
  – Remote access to the target system (TCP/IP based)

  To update the UUID from Lenovo XClarity Essentials OneCLI:

  1. Download and install Lenovo XClarity Essentials OneCLI.

     To download Lenovo XClarity Essentials OneCLI, go to the following site:

     https://datacentersupport.lenovo.com/solutions/HT116433

  2. Copy and unpack the OneCLI package, which also includes other required files, to the server. Make sure that you unpack the OneCLI and the required files to the same directory.
  3. After you have Lenovo XClarity Essentials OneCLI in place, type the following command to set the UUID:
     ```
     onecli config createuuid SYSTEM_PROD_DATA.SysInfoUUID [access_method]
     ```

     Where:

[access_method]
The access method that you select to use from the following methods:

- Online authenticated LAN access, type the command:
  `[--bmc-username <xcc_user_id> --bmc-password <xcc_password>]`

  Where:

  xcc_user_id
  The BMC/IMM/XCC account name (1 of 12 accounts). The default value is USERID.

  xcc_password
  The BMC/IMM/XCC account password (1 of 12 accounts).

  Example command is as follows:
  `onecli config createuuid SYSTEM_PROD_DATA.SysInfoUUID --bmc-username <xcc_user_id> --bmc-password <xcc_password>`
- Online KCS access (unauthenticated and user restricted):

  You do not need to specify a value for *access_method* when you use this access method.

  Example command is as follows:
  `onecli config createuuid SYSTEM_PROD_DATA.SysInfoUUID`

  Note: The KCS access method uses the IPMI/KCS interface, which requires that the IPMI driver be installed.
- Remote LAN access, type the command:
  `[--bmc <xcc_user_id>:<xcc_password>@<xcc_external_ip>]`

  Where:

  xcc_external_ip
  The BMC/IMM/XCC external IP address. There is no default value. This parameter is required.

  xcc_user_id
  The BMC/IMM/XCC account name (1 of 12 accounts). The default value is USERID.

  xcc_password
  The BMC/IMM/XCC account password (1 of 12 accounts).

  Note: BMC, IMM, or XCC external IP address, account name, and password are all valid for this command.

  Example command is as follows:
  `onecli config createuuid SYSTEM_PROD_DATA.SysInfoUUID --bmc <xcc_user_id>:<xcc_password>@<xcc_external_ip>`

4. Restart the Lenovo XClarity Controller.
5. Restart the server.

Update the asset tag

Optionally, you can update the asset tag.

There are two methods available to update the asset tag:

- From Lenovo XClarity Provisioning Manager

  To update the asset tag from Lenovo XClarity Provisioning Manager:

1. Start the server and press F1 to display the Lenovo XClarity Provisioning Manager interface.
2. If the power-on Administrator password is required, enter the password.
3. From the System Summary page, click **Update VPD**.
4. Update the asset tag information.

- From Lenovo XClarity Essentials OneCLI

  Lenovo XClarity Essentials OneCLI sets the asset tag in the Lenovo XClarity Controller. Select one of the following methods to access the Lenovo XClarity Controller and set the asset tag:

  – Operate from the target system, such as LAN or keyboard console style (KCS) access
  – Remote access to the target system (TCP/IP based)

  To update the asset tag from Lenovo XClarity Essentials OneCLI:

  1. Download and install Lenovo XClarity Essentials OneCLI.

     To download Lenovo XClarity Essentials OneCLI, go to the following site:

     https://datacentersupport.lenovo.com/solutions/HT116433
  2. Copy and unpack the OneCLI package, which also includes other required files, to the server. Make sure that you unpack the OneCLI and the required files to the same directory.
  3. After you have Lenovo XClarity Essentials OneCLI in place, type the following command to set the DMI:

     ```
     onecli config set SYSTEM_PROD_DATA.SysEncloseAssetTag <asset_tag> [access_method]
     ```

     Where:

     <asset_tag>
     The server asset tag number. Type `aaaaaaaaaaaaaaaaaaaaaaaaaaaaaaaa`, where *aaaaaaaaaaaaaaaaaaaaaaaaaaaaaaaa* is the asset tag number.

     [access_method]
     The access method that you select to use from the following methods:

     – Online authenticated LAN access, type the command:

       [**--bmc-username** `<xcc_user_id>` **--bmc-password** `<xcc_password>`]

       Where:

       xcc_user_id
       The BMC/IMM/XCC account name (1 of 12 accounts). The default value is USERID.

       xcc_password
       The BMC/IMM/XCC account password (1 of 12 accounts).

       Example command is as follows:
       `onecli config set SYSTEM_PROD_DATA.SysEncloseAssetTag <asset_tag>` **--bmc-username** `<xcc_user_id>` **--bmc-password** `<xcc_password>`

     – Online KCS access (unauthenticated and user restricted):

       You do not need to specify a value for *access_method* when you use this access method.

       Example command is as follows:
       `onecli config set SYSTEM_PROD_DATA.SysEncloseAssetTag <asset_tag>`

       Note: The KCS access method uses the IPMI/KCS interface, which requires that the IPMI driver be installed.

– Remote LAN access, type the command:
  [**--bmc** `<xcc_user_id>:<xcc_password>@<xcc_external_ip>`]

  Where:

  xcc_external_ip
  The BMC/IMM/XCC IP address. There is no default value. This parameter is required.

  xcc_user_id
  The BMC/IMM/XCC account (1 of 12 accounts). The default value is USERID.

  xcc_password
  The BMC/IMM/XCC account password (1 of 12 accounts).

  Note: BMC, IMM, or XCC internal LAN/USB IP address, account name, and password are all valid for this command.

  Example command is as follows:
  ```
  onecli config set SYSTEM_PROD_DATA.SysEncloseAssetTag <asset_tag>
  --bmc <xcc_user_id>:<xcc_password>@<xcc_external_ip>
  ```

4. Reset the Lenovo XClarity Controller to the factory defaults. Go to https://pubs.lenovo.com/xcc/NN1ia_c_resettingthexcc.html for more information.

Chapter 5. Resolving installation issues

Use this information to resolve issues that you might have when setting up your system.

Use the information in this section to diagnose and resolve problems that you might encounter during the initial installation and setup of your server.

- “Server does not power on” on page 131
- “The server immediately displays the POST Event Viewer when it is turned on” on page 131
- “Embedded hypervisor is not in the boot list” on page 131
- “Server cannot recognize a hard drive” on page 132
- “Displayed system memory less than installed physical memory” on page 133
- “A Lenovo optional device that was just installed does not work.” on page 133
- “Voltage planar fault is displayed in the event log” on page 134

Server does not power on

Complete the following steps until the problem is resolved:

1. Check the event log for any events related to the server not powering on.
2. Check for any LEDs that are flashing amber.
3. Check the power LED on the system board.
4. Reseat the power supply.
5. Replace the power supply.

The server immediately displays the POST Event Viewer when it is turned on

Complete the following steps until the problem is solved.

1. Correct any errors that are indicated by the light path diagnostics LEDs.
2. Make sure that the server supports all the processors and that the processors match in speed and cache size.

   You can view processor details from system setup.

   To determine if the processor is supported for the server, see https://serverproven.lenovo.com/.
3. (Trained technician only) Make sure that processor 1 is seated correctly
4. (Trained technician only) Remove processor 2 and restart the server.
5. Replace the following components one at a time, in the order shown, restarting the server each time:
   a. (Trained technician only) Processor
   b. (Trained technician only) System board

Embedded hypervisor is not in the boot list

Complete the following steps until the problem is solved.

1. If the server has been installed, moved, or serviced recently, or if this is the first time the embedded hypervisor is being used, make sure that the device is connected properly and that there is no physical damage to the connectors.
2. See the documentation that comes with the optional embedded hypervisor flash device for setup and configuration information.

© Copyright Lenovo 2017, 2025

3. Check https://serverproven.lenovo.com/ to validate that the embedded hypervisor device is supported for the server.
4. Make sure that the embedded hypervisor device is listed in the list of available boot options. From the management controller user interface, click **Server Configuration → Boot Options**.

   For information about accessing the management controller user interface, see the XClarity Controller product documentation:

   https://pubs.lenovo.com/xcc/dw1lm_c_chapter2_openingandusing
5. Check http://datacentersupport.lenovo.com for any tech tips (service bulletins) related to the embedded hypervisor and the server.
6. Make sure that other software works on the server to ensure that it is working properly.

Server cannot recognize a hard drive

Complete the following steps until the problem is solved.

1. Observe the associated yellow hard disk drive status LED. If the LED is lit, it indicates a drive fault.
2. If the status LED is lit, remove the drive from the bay, wait 45 seconds, and reinsert the drive, making sure that the drive assembly connects to the hard disk drive backplane.
3. Observe the associated green hard disk drive activity LED and the yellow status LED and perform corresponding operations in different situations:
   - If the green activity LED is flashing and the yellow status LED is not lit, the drive is recognized by the controller and is working correctly. Run the diagnostics tests for the hard disk drives. When you start a server and press the key according to the on-screen instructions, the LXPM is displayed by default. (For more information, see the “Startup” section in the LXPM documentation compatible with your server at https://pubs.lenovo.com/lxpm-overview/.)You can perform hard drive diagnostics from this interface. From the Diagnostic page, click **Run Diagnostic → HDD test/Disk Drive Test**.*
   - If the green activity LED is flashing and the yellow status LED is flashing slowly, the drive is recognized by the controller and is rebuilding.
   - If neither LED is lit or flashing, check whether the hard disk drive backplane is correctly seated. For details, go to step 4.
   - If the green activity LED is flashing and the yellow status LED is lit, replace the drive. If the activity of the LEDs remains the same, go to step Hard disk drive problems. If the activity of the LEDs changes, return to step 1.
4. Make sure that the hard disk drive backplane is correctly seated. When it is correctly seated, the drive assemblies correctly connect to the backplane without bowing or causing movement of the backplane.
5. Reseat the backplane power cable and repeat steps 1 through 3.
6. Reseat the backplane signal cable and repeat steps 1 through 3.
7. Suspect the backplane signal cable or the backplane:
   - Replace the affected backplane signal cable.
   - Replace the affected backplane.
8. Run the diagnostics tests for the hard disk drives. When you start a server and press the key according to the on-screen instructions, the LXPM is displayed by default. (For more information, see the “Startup” section in the LXPM documentation compatible with your server at https://pubs.lenovo.com/lxpm-overview/.) You can perform hard drive diagnostics from this interface. From the Diagnostic page, click **Run Diagnostic → HDD test/Disk Drive Test**.*

   Based on those tests:

   - If the backplane passes the test but the drives are not recognized, replace the backplane signal cable and run the tests again.

- Replace the backplane.
- If the adapter fails the test, disconnect the backplane signal cable from the adapter and run the tests again.
- If the adapter fails the test, replace the adapter.

Displayed system memory less than installed physical memory

Complete the following steps until the problem is resolved:

Note: Each time you install or remove a DIMM, you must disconnect the server from the power source; then, wait 10 seconds before restarting the server.

1. Make sure that:
   - No error LEDs are lit on the operator information panel.
   - No DIMM error LEDs are lit on the system board.
   - Memory mirrored channel does not account for the discrepancy.
   - The memory modules are seated correctly.
   - You have installed the correct type of memory.
   - If you changed the memory, you updated the memory configuration in the Setup utility.
   - All banks of memory are enabled. The server might have automatically disabled a memory bank when it detected a problem, or a memory bank might have been manually disabled.
   - There is no memory mismatch when the server is at the minimum memory configuration.
2. Reseat the DIMMs, and then restart the server.
3. Run memory diagnostics. When you start a server and press F1, the Lenovo XClarity Provisioning Manager interface is displayed by default. You can perform memory diagnostics from this interface. From the Diagnostic page, click **Run Diagnostic → Memory test**.
4. Check the POST error log:
   - If a DIMM was disabled by a systems-management interrupt (SMI), replace the DIMM.
   - If a DIMM was disabled by the user or by POST, reseat the DIMM; then, run the Setup utility and enable the DIMM.
5. Reseat the DIMM.
6. Restart the server.

A Lenovo optional device that was just installed does not work.

1. Make sure that:
   - The device is supported for the server (see https://serverproven.lenovo.com/).
   - You followed the installation instructions that came with the device and the device is installed correctly.
   - You have not loosened any other installed devices or cables.
   - You updated the configuration information in system setup. When you start a server and press the key according to the on-screen instructions to display the Setup Utility. (For more information, see the "Startup" section in the LXPM documentation compatible with your server at https://pubs.lenovo.com/lxpm-overview/.) Whenever memory or any other device is changed, you must update the configuration.
2. Reseat the device that you have just installed.
3. Replace the device that you have just installed.
4. Reseat the cable connection and check there is no physical damage to the cable.
5. If there is any cable damages, then replace the cable.

Voltage planar fault is displayed in the event log

Complete the following steps until the problem is solved.

1. Revert the system to the minimum configuration. See "Specifications" on page 5 for the minimally required number of processors and DIMMs.
2. Restart the system.
   - If the system restarts, add each of the removed items one at a time and restart the system each time until the error occurs. Replace the item for which the error occurs.
   - If the system does not restart, suspect the system board.

Appendix A. Getting help and technical assistance

If you need help, service, or technical assistance or just want more information about Lenovo products, you will find a wide variety of sources available from Lenovo to assist you.

On the World Wide Web, up-to-date information about Lenovo systems, optional devices, services, and support are available at:

http://datacentersupport.lenovo.com

Note: This section includes references to IBM web sites and information about obtaining service. IBM is Lenovo's preferred service provider for ThinkSystem.

Before you call

Before you call, there are several steps that you can take to try and solve the problem yourself. If you decide that you do need to call for assistance, gather the information that will be needed by the service technician to more quickly resolve your problem.

Attempt to resolve the problem yourself

You can solve many problems without outside assistance by following the troubleshooting procedures that Lenovo provides in the online help or in the Lenovo product documentation. The Lenovo product documentation also describes the diagnostic tests that you can perform. The documentation for most systems, operating systems, and programs contains troubleshooting procedures and explanations of error messages and error codes. If you suspect a software problem, see the documentation for the operating system or program.

You can find the product documentation for your ThinkSystem products at https://pubs.lenovo.com/

You can take these steps to try to solve the problem yourself:

- Check all cables to make sure that they are connected.
- Check the power switches to make sure that the system and any optional devices are turned on.
- Check for updated software, firmware, and operating-system device drivers for your Lenovo product. The Lenovo Warranty terms and conditions state that you, the owner of the Lenovo product, are responsible for maintaining and updating all software and firmware for the product (unless it is covered by an additional maintenance contract). Your service technician will request that you upgrade your software and firmware if the problem has a documented solution within a software upgrade.
- If you have installed new hardware or software in your environment, check https://serverproven.lenovo.com/ to make sure that the hardware and software are supported by your product.
- Go to http://datacentersupport.lenovo.com and check for information to help you solve the problem.
  - Check the Lenovo forums at https://forums.lenovo.com/t5/Datacenter-Systems/ct-p/sv_eg to see if someone else has encountered a similar problem.

Gathering information needed to call Support

If you require warranty service for your Lenovo product, the service technicians will be able to assist you more efficiently if you prepare the appropriate information before you call. You can also go to http://datacentersupport.lenovo.com/warrantylookup for more information about your product warranty.

© Copyright Lenovo 2017, 2025

Gather the following information to provide to the service technician. This data will help the service technician quickly provide a solution to your problem and ensure that you receive the level of service for which you might have contracted.

- Hardware and Software Maintenance agreement contract numbers, if applicable
- Machine type number (Lenovo 4-digit machine identifier)
- Model number
- Serial number
- Current system UEFI and firmware levels
- Other pertinent information such as error messages and logs

As an alternative to calling Lenovo Support, you can go to https://support.lenovo.com/servicerequest to submit an Electronic Service Request. Submitting an Electronic Service Request will start the process of determining a solution to your problem by making the pertinent information available to the service technicians. The Lenovo service technicians can start working on your solution as soon as you have completed and submitted an Electronic Service Request.

Collecting service data

To clearly identify the root cause of a server issue or at the request of Lenovo Support, you might need collect service data that can be used for further analysis. Service data includes information such as event logs and hardware inventory.

Service data can be collected through the following tools:

- **Lenovo XClarity Provisioning Manager**

  Use the Collect Service Data function of Lenovo XClarity Provisioning Manager to collect system service data. You can collect existing system log data or run a new diagnostic to collect new data.

- **Lenovo XClarity Controller**

  You can use the Lenovo XClarity Controller web interface or the CLI to collect service data for the server. The file can be saved and sent to Lenovo Support.

  - For more information about using the web interface to collect service data, see https://pubs.lenovo.com/xcc/NN1ia_c_servicesandsupport.
  - For more information about using the CLI to collect service data, see https://pubs.lenovo.com/xcc/nn1ia_r_ffdccommand.html.

- **Lenovo XClarity Administrator**

  Lenovo XClarity Administrator can be set up to collect and send diagnostic files automatically to Lenovo Support when certain serviceable events occur in Lenovo XClarity Administrator and the managed endpoints. You can choose to send diagnostic files to Lenovo Support using Call Home or to another service provider using SFTP. You can also manually collect diagnostic files, open a problem record, and send diagnostic files to the Lenovo Support Center.

  You can find more information about setting up automatic problem notification within the Lenovo XClarity Administrator at https://pubs.lenovo.com/lxca/admin_setupcallhome.html.

- **Lenovo XClarity Essentials OneCLI**

  Lenovo XClarity Essentials OneCLI has inventory application to collect service data. It can run both in-band and out-of-band. When running in-band within the host operating system on the server, OneCLI can collect information about the operating system, such as the operating system event log, in addition to the hardware service data.

To obtain service data, you can run the `getinfor` command. For more information about running the `getinfor`, see https://pubs.lenovo.com/lxce-onecli/onecli_r_getinfor_command.

Contacting Support

You can contact Support to obtain help for your issue.

You can receive hardware service through a Lenovo Authorized Service Provider. To locate a service provider authorized by Lenovo to provide warranty service, go to https://datacentersupport.lenovo.com/serviceprovider and use filter searching for different countries. For Lenovo support telephone numbers, see https://datacentersupport.lenovo.com/supportphonelist for your region support details.

Appendix B. Trademarks

LENOVO, THINKSYSTEM, and XCLARITY are trademarks of Lenovo.

Intel and Xeon are trademarks of Intel Corporation in the United States, other countries, or both.

Microsoft and Windows are trademarks of the Microsoft group of companies.

Linux is a registered trademark of Linus Torvalds.

All other trademarks are the property of their respective owners. © 2022 Lenovo

Index

A

adjusting
  retainer on M.2 backplane 96
air baffle
  installing 108
  removing 70

B

back up the server configuration 125
backplane
  installing 89–90

C

cable routing
  eight 3.5-inch hot-swap drives and four 2.5-inch hot-swap drives 53
  eight 3.5-inch hot-swap SAS/SATA drives 52
  eight 3.5-inch simple-swap drives 38
  graphics adapter 37
  hot-swap-drive backplane 38
  optical drive 33
  power interface board 36
  sixteen 2.5-inch hot-swap drives 39
  tape drive 34
  twenty 2.5-inch hot-swap drives 44
cable the server 116
collecting service data 136
Common installation issues 131
Configuration - ThinkSystem ST550 119
configure the firmware 123
contamination, particulate and gaseous 13
CPU
  option install 74
creating a personalized support web page 135
custom support web page 135

D

devices, static-sensitive
  handling 68
DIMM
  installing 78
DIMM installation rules 79

E

expansion drive cage
  installing 87

F

features 4
foot stands
  installing 112
form factor 3
front fan
  installing 103
front panel 19, 22
front view 19

G

gaseous contamination 13
Getting help 135
guidelines
  options installation 66
  system reliability 68

H

handling static-sensitive devices 68
hardware options
  installing 69
hardware service and support telephone numbers 137
help 135
hot-swap drive
  installing 114
hot-swap drive backplane
  installing 89
hot-swap power supply
  installing 99
hot-swap power supply cage
  installing 97

I

ID label 1
installation
  guidelines 66
installation guidelines 66
installing
  air baffle 108
  backplane 89–90
  DIMM 78
  expansion drive cage 87
  foot stands 112
  front fan 103
  hot-swap drive 114
  hot-swap drive backplane 89
  hot-swap power supply 99
  hot-swap power supply cage 97
  M.2 backplane 93
  M.2 drive 93
  optical drive 83
  PCIe adapter 91
  PCIe adapter holder 106
  PCIe adapter retainer 107
  power interface board 98
  RAID super capacitor module 109
  rear fan 104
  serial port module 92
  server cover 110
  simple-swap drive 112
  simple-swap-drive backplate 88
  tape drive 83
internal cable routing 31
introduction 1

M

M.2 backplane
  installing 93
M.2 drive
  installing 93
memory configuration 124

© Copyright Lenovo 2017, 2025

microprocessor
  option install 74

N

network access label 1
network activity LED 22

O

optical drive
  installing 83
optical-drive bay 19
optical-drive eject/close button 19
optical-drive manual-eject hole 19
optical-drive status LED 19
option install
  CPU 74
  microprocessor 74
  PHM 74
  processor 74
  processor-heat-sink module 74

P

package contents 2
particulate contamination 13
parts list 59
PCIe adapter
  installing 91
PCIe adapter holder
  installing 106
  removing 72
PCIe adapter retainer
  installing 107
  removing 71
PHM
  option install 74
power button 22
power cords 63
power interface board
  installing 98
power off the server 117
power on the server 116
power status LED 22
processor
  option install 74
processor-heat-sink module
  option install 74

Q

QR code 1

R

RAID super capacitor module
  installing 109
rear fan
  installing 104
rear view 25
rear view LED 28
removing
  air baffle 70
  PCIe adapter holder 72
  PCIe adapter retainer 71
  server cover 69
retainer on M.2 backplane
  adjusting 96

S

safety inspection checklist 67
serial port module
  installing 92
server components 19
server cover
  installing 110
  removing 69
server setup 65
server setup checklist 65
service and support
  before you call 135
  hardware 137
  software 137
service data 136
simple-swap drive
  installing 112
simple-swap-drive backplate
  installing 88
software service and support telephone numbers 137
static-sensitive devices
  handling 68
storage-drive bay 19
support web page, custom 135
system board components 30
System configuration - ThinkSystem ST550 119
system error LED 22
system ID button 22
system ID LED 22
system reliability guidelines 68

T

telephone numbers 137
trademarks 139

U

update the firmware 120
updating
  asset tag 127
  Universal Unique Identifier (UUID) 126
  Update the Vital Product Data (VPD) 126

V

validate server setup 117

W

warranty 1
working inside the server
  power on 68

Lenovo